2008

Basic Electrical Technology

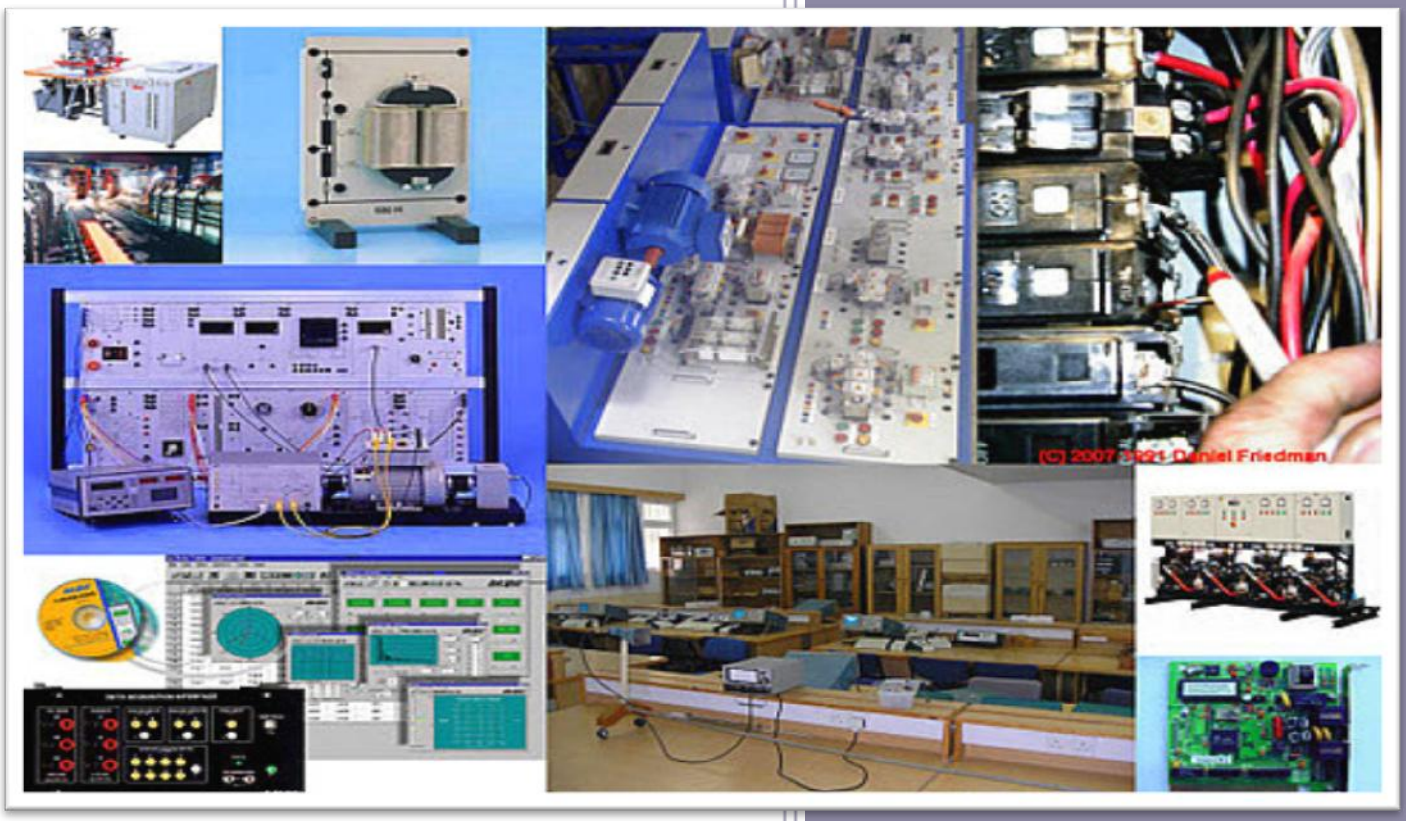

Version 2

EE IIT, Kharagpur, India

2008

Module 1

Introduction

Lesson

1

Introducing the Course on Basic Electrical

Contents

1 Introducing the course (Lesson-1) 4

Introduction ……..... 4

Module-1 Introduction ……..... 4

Module-2 D.C. circuits …….. 4

Module-3 D.C transient ……. 6

Module-4 Single phase A.C circuits …….. 7

Module-5 Three phase circuits ……... 8

Module-6 Magnetic circuits & Core losses ……..... 8

Module-7 Transformer ……... 9

Module-8 Three phase induction motor ……. 10

Module-9 D.C Machines ……..... 11

Module-10 Measuring instruments ……..... 12

Introduction

Welcome to this course on **Basic Electrical Technology**. Engineering students of almost all disciplines has to undergo this course (name may be slightly different in different course curriculum) as a core subject in the first semester. It is needless to mention that how much we are dependent on electricity in our day to day life. A reasonable understanding on the basics of applied electricity is therefore important for every engineer.

Apart from learning d.c and a.c circuit analysis both under steady state and transient conditions, you will learn basic working principles and analysis of transformer, d.c motors and induction motor. Finally working principles of some popular and useful indicating measuring instruments are presented.

The course can be broadly divided into 3 major parts, namely: Electrical circuits, Electrical Machines and Measuring instruments. The course is spread over 10 modules covering these 3-parts, each module having two or more lessons under it as detailed below.

Contributors

1. Modules 4, 5 and 8 by Prof. N.K. De
2. Modules 2, 3 and 10 by Prof. G.D. Ray
3. Modules 1, 6, 7 and 9 by Dr. T.K. Bhattacharya

Module-1 Introduction

Following are the two lessons in this module.

1.1 Introducing the course

Currently we are in this lesson which deals with the organization of the course material in the form of modules and lessons.

1.2 Generation, transmission and distribution of electric power: an overview

This lesson highlights conventional methods of generating 3-phase, 50 Hz electrical power, its transmission and distribution with the help of transmission lines and substations. It will give you a feel of a modern power system with names and function of different major components which comprise it.

Module-2 DC circuits

This module consists of seven lessons (2.1-2.7) starting with the fundamental concepts of electric circuit (active and passive) elements, circuit laws and theorems that established the basic foundation to solve dc network problems or to analyze the voltage, current and power (delivered or absorbed) in different branches. At the end of each lesson a set of problem is provided to test the readers understanding. Answers to these problems are located therein. The contents of each lesson are described below.

2.1 Introduction to electrical circuits

This lesson provides some basic concepts on Kirchoff's law, difference between linear and nonlinear circuits, and understanding the difference between current and voltage

sources. The mathematical models of voltage and current sources are explained and subsequently the basic principles of voltage and current dividers are discussed. Each topic of this lesson is clearly illustrated by solving some numerical problems.

2.2 Loop Analysis of resistive circuit in the context of dc voltages and currents

In this lesson, loop analysis method based on Ohms law and Kirchoffs voltage law is presented to obtain a solution of a resistive network. This technique is particularly effective when applied to circuits containing voltage sources exclusively; however, it may be applied to circuits containing both voltage and current sources. Several numerical problems including both voltage and current sources have been considered to illustrate the steps involved in loop analysis method.

2.3 Node-voltage analysis of resistive circuit in the context of dc voltages and currents

Node voltage analysis is the most general and powerful method based on Kirchhoff's current law is introduced in this lesson for the analysis of electric circuits. The choice of one the nodes as reference node for the analysis of dc circuit is discussed. The procedure for analyzing a dc network is demonstrated by solving some resistive circuit problems.

2.4 Wye (*Y*) – Delta (Δ) or Delta (Δ) – Wye (*Y*) transformations

The objective of this lesson is to introduce how to convert a three terminal Delta (Δ) / Wye (*Y*) network into an equivalent Wye (Y) / Delta (Δ) through transformations. These are all useful techniques for determining the voltage and current levels in a complex circuit. Some typical problems are solved to familiarize with these transformations.

2.5 Superposition Theorem in the context of dc voltage and current sources acting in a resistive network

This lesson discusses a concept that is frequently called upon in the analysis of linear circuits (See 2.3). The principle of superposition is primarily a conceptual aid that can be very useful tool in simplifying the solution of circuits containing multiple independent voltage and current sources. It is usually not an efficient method. Concept of superposition theorem is illustrated by solving few circuit problems.

2.6 Thevenin's and Norton's theorems in the context of dc voltage and current sources in a resistive network

In this lesson we consider a pair of equivalent circuits, called Thevenin's and Norton's forms, containing both resistors and sources at the heart of circuit analysis. These theorems are discussed at length and highlighted their great utility in simplifying many practical circuit problems.

Reduction of linear circuits to either equivalent form is explained through solution of some circuit problems. Subsequently, the maximum power transfer to the load from the rest of circuit is also considered in this lesson using the concept of these theorems.

2.7 Analysis of dc resistive network in presence of one non-linear element

Volt-ampere characteristic of many practical elements (Carbon lamp, Tungsten lamp, Semiconductor diode, Thermistor etc.) exhibits a nonlinear characteristic and it is presented in this lesson. A common graphical procedure in case of one nonlinear element or device in a circuit is also introduced in this lesson to analyze the circuit behavior. This technique is also referred to as load line analysis method that is intuitively appealing to analyze some complex circuits. Another method based on analytic technique is described to analyze an electric circuit that contains only one nonlinear element or device. These techniques are discussed through worked out problems.

Module-3 DC transient

The study of DC transients is taken up in module-3, consisting of two lessons (3.1 and 3.2). The transients in a circuit containing energy storage elements occur when a switch is turned on or off and the behavior of voltage or a current during the transition between two distinct steady state conditions are discussed in next two lessons. At the end of each lesson some problems are given to solve and answers of these problems are located therein. The contents of each lesson are described below.

3.1 Study of DC transients in R-L and R-C circuits

This lesson is concerned to explore the solution of first order circuit that contains resistances, only single energy storage element inductance or capacitance, dc voltage and current sources, and switches. A fundamental property of inductor currents and capacitor voltages is discussed. In this lesson, the transient and steady state behavior in a circuit are studied when a switch is turned on or off. The initial condition, the steady solution and the time constant of the first order system are also discussed that uniquely determine the system behavior. The solution of differential equation restricted to second order dynamic systems for different types of forcing function are included in Appendix of this, lesson. Some problems are solved and their dynamic responses are plotted.

3.2 Study of DC transients in R-L-C circuits

The solution of second order circuit that contains resistances, inductances and capacitances, dc voltage and current sources, and switches is studied in this lesson. In this lesson, the transient and steady state behavior of a second order circuit are studied under three special cases namely, (i) over damped system (ii) critically damped system (iii) under damped system that can arise depending upon the values of circuit parameters. Some examples are solved and their dynamic responses are shown.

Module-4 Single phase AC circuits

There are six lessons (4.1-4.6) in this module, where the various aspects related to ac circuits fed from single phase supply, are described.

4.1 Generation of single phase ac and fundamental aspects

The principle of generation of sinusoidal (ac) waveforms (single phase) in an ac generator is first presented. Then, the two aspects – average and root mean square (rms) values, of alternating or periodic waveforms, such as voltage/current, are described with typical examples (sinusoidal and triangular).

4.2 Representation of sinusoidal quantities in phasor with j operator

As the phasor relations are widely used for the study of single phasor ac circuits, the phasor representation of sinusoidal quantities (voltage/current) is described, in the lesson, along with the transformation from rectangular (Cartesian) to polar form, and vice versa. Then, the phasor algebra relating the mathematical operations, involving two or more phasors (as the case may be), from addition to division, is taken up, with examples in each case, involving both the forms of phasor representations as stated.

4.3 Steady state analysis of series circuits

The steady state analysis of series (R-L-C) circuits fed from single phase ac supply is presented. Staying with each of the elements (R, L & C), the current in steady state is obtained with application of single phase ac voltage, and the phasor diagrams are also drawn in each case. The use of phasor algebra is also taken up. Then, other cases of series circuits, like R-L, R-C and R-L-C, are described, wherein, in each case, all methods as given, are used.

4.4 Analysis of parallel and series-parallel circuits

The application of phasor algebra to solve for the branch and total currents and the complex impedance, of the parallel and the series-parallel circuits fed from single phase ac supply is presented in this lesson. The phasor diagram is drawn showing all currents, and voltage drops. The application of two Kirchoff's laws in the circuits, for the currents at a node, and the voltage drops across the elements, including voltage source(s), in a loop, is shown there (phasor diagram).

4.5 Resonance in electrical circuits

The problem of resonance in the circuits fed from a variable frequency (ac) supply is discussed in this lesson. Firstly, the case of series (R-L-C) circuit is taken up, and the condition of resonance, along with maximum current and minimum impedance in the circuit, with the variation in supply frequency is determined. Then, the problem of parallel circuits and other cases, such as, lossy coil (r-L), is taken up, where the condition of resonance is found. This results in minimum current and maximum impedance here.

4.6 Concept of apparent, active and reactive power

The formula for active (average) power in a circuit fed from single phase ac supply, in terms of input voltage and current, is derived in this lesson, followed by definition of the

term, ‘power factor’ in this respect. The concept of apparent and reactive power (with its sign for lagging and leading load) is presented, along with formula.

Module-5 Three phase AC circuits

There are only three lessons (5.1-5.3) in this module. Only the balanced star-and delta-connected circuits fed from three-phase ac supply are presented here.

5.1 Generation of three-phase voltage, line and phase quantities in star- and delta-connection and their relations

The generation of three-phase balanced voltages is initially presented. The balanced windings as described can be connected in star- and delta-configuration. The relation between line and phase voltages for star-connected supply is presented. Also described is the relation between phase and line currents, when the windings are connected in delta. The phasor diagrams are drawn for all cases.

5.2 Solution of three-phase balanced circuits

The load (balanced) is connected in star to a balanced three-phase ac supply. The currents in all three phases are determined, with phasor diagram drawn showing all voltages and currents. Then, the relation between phase and line currents is derived for balanced delta-connected load. The power (active) consumed in the balanced load is derived in terms of the line voltage and currents for both cases.

5.3 Measurement of three-phase power

The total power (in all three phases) is measured using two wattmeters only. This is shown for both unbalanced and balanced cases. The phasor diagram with balanced three-phase load is drawn. Other cases are also described.

Module-6 Magnetic circuits & Core losses

In this module there are two Lessons 21 and 22 as enumerated below.

6.1 Simple magnetic circuits

It is often necessary to produce a desired magnetic flux, in a magnetic material (core) having a definite geometric shape with or without air gap, with the help of current passing through a coil wrapped around the core. This lesson discusses how the concept of circuit analogy can be introduced to tackle such problems. Both linear and non-linear magnetic circuit problems are discussed through worked out problems.

6.2 Eddy current & hysteresis losses

These two losses are produced in any magnetic material which is subjected to an alternating time varying fields. Generally in all types of A.C machines /equipments working on electromagnetic principle these losses occur. In D.C machine armature too these losses occur. In this lesson the origin of these losses are explained and formula for estimating them are derived. Finally methods adopted to minimize these losses discussed as losses bring down the efficiency of any machines.

Module-7 Transformer

Transformers are one of the most important components of the modern power system. In this module having 6 lessons, various aspects of a transformer are explained and discussed as per the break up given below.

7.1 Ideal single phase transformer

Clear concept of ideal transformer goes a long way to understand the equivalent circuit representation of a practical transformer discussed in the next lesson. In ideal transformer all kinds of losses are neglected and permeability of core is assumed to be infinitely large. To have a **rough** and quick estimate of primary current for a given secondary current of a practical transformer one need not consider detail equivalent circuit but rather pretend that the transformer is ideal and apply simple relation of ideal transformer.

Properties of ideal transformer and its principle of operation along with phasor diagram are discussed both under no load and load condition.

7.2 Practical single phase transformer

A practical transformer has various losses and leakage impedance. In this lesson, it has been shown how these can be taken into account in the equivalent circuit. Phasor diagrams under no load and load condition developed. Concept of approximate equivalent circuit discussed and meaning of equivalent circuit referred to primary and secondary side are explained.

7.3 Testing, efficiency and regulation of transformer

Two basic tests called *open circuit* and *short circuit* test are discussed and then it is explained how equivalent circuit parameters of a single phase transformer can be obtained from the test data. Importance of selecting a particular side for a particular test is highlighted.

Importance of efficiency and regulation are discussed and working formula for them derived. Concept of *all day* efficiency for distribution transformer is given. Regulation is essentially a measure of change of magnitude of the secondary voltage from no load to full load condition and its value should be low. From the expression of regulation it is easily identified the parameters on which it depends.

7.4 Three phase transformer

Generation, distribution and transmission of power are carried out with a 3-phase, 50 Hz system. Therefore, stepping up or down of 3-phase voltage is required. This of course can not be done using a single phase transformer. Three separate identical transformers can be connected appropriately to serve the purpose. A 3-phase transformer formed by connecting three separate transformers is called a *bank* of 3-phase transformer. Another way of having a three phase transformer, is to construct it as a single unit of three phase transformer. The relative advantages and disadvantages of the two are discussed.

Various important and popular connections of 3-phase transformer (such as star/star, star/delta, delta/star etc.) are discussed. The importance of dot convention while making such connections are pointed out. Simple problems involving a 3-phase transformer connection are worked out assuming the transformer to be ideal.

Vector grouping of various three phase transformer connection are generally not meant for a first year course and can be avoided. However, for completeness sake and for students who want to know more, it is included.

7.5 Autotransformer

There are transformers which work with a single winding. Such transformers are called auto-transformers. The lesson discusses its construction and bring out differences with *two winding* transformer. Here, ideal auto transformer is assumed to show how to find out current distribution in different parts of the winding when it is connected in a circuit. It is also pointed out how three single phase auto transformers can be connected to transform a 3-phase voltage.

7.6 Problem solving on transformers

Few typical problems on single phase, 3-phase and auto transformers are worked out, enumerating logical steps involved.

Module-8 Three phase induction motor

In this module consisting of six lessons (8.1-8.6), the various aspects of the three-phase induction motor are presented.

8.1 Concept of rotating magnetic field

Before taking up the three-phase induction motor (IM), the concept of rotating magnetic field is introduced in this lesson. The balanced three-phase winding of the stator in IM are fed from a balanced three-phase supply. It is shown that a constant magnitude of magnetic field (flux) is produced in the air gap, which rotates at 'synchronous speed' as defined in terms of No. of poles of the stator winding and supply frequency.

8.2 Brief construction and principle of operation

Firstly, the construction of a three-phase induction motor is briefly described, with two types of rotor – squirrel cage and wound (slip-ring) one. The principle of torque production in a three-phase IM is explained in detail, with the term, 'slip' defined here.

8.3 Per phase equivalent circuit and power flow diagram

The equivalent circuit of a three-phase IM is obtained, which is explained step by step. Also the power flow diagram and the various losses taking place are discussed.

8.4 Torque-slip (speed) characteristic

The torque speed (slip) equation is obtained from the equivalent circuit of the rotor. The characteristics are drawn, with typical examples, such as variation in input (stator) voltage, and also in rotor resistance (with external resistance inserted in each phase).

8.5 Types of starters

The need of starter in a three-phase IM to reduce the stating current drawn is first explained. Then, three types of starters – Direct-on-line (DOL), star-delta one for use in an IM with a nominally delta-connected stator, and auto-transformer, are described. Lastly, the rotor resistance starter for a wound rotor (slip ring) IM is briefly presented.

8.6 Single-phase induction motor and starting methods

It is first shown that starting torque is not produced in a single phase induction motor (IM). Then, the various types of starting methods used for single-phase IM with two stator windings (main and auxiliary), are explained in detail. Lastly, the shaded pole single-phase IM is described.

Module-9 DC Machines

9.1 Constructional features of DC machines

The lesson discusses the important construction features of DC machines. The induced voltage in a rotating coil in a stationary magnetic field is always alternating in nature. The functions of commutator segments and brushes, which convert the AC voltage to DC form, are explained.

The examples of lap and wave windings used for armature are presented. It has been shown that the number of parallel paths in the armature will be different in the two types of windings. For the first time reading and depending upon the syllabus, you may avoid this portion.

9.2 Principle of operation of D.C machines

The lesson begins with an example of *single* conductor linear D.C generator and motor. It helps to develop the concept of driving force, opposing force, generated and back emf.

Concept of Driving and opposing torques in rotating machines are given first and then the principle of operation of rotating D.C generator and motor are explained. Condition for production of steady electromagnetic torque are discussed.

9.3 EMF and torque equations

The derivation of the two basic and important equations, namely emf and torque equations, which are always needed to be written, if one wants to analyse the machine performance. Irrespective of the fact that whether the machine is operating as a generator or as a motor, the same two equations can be applied. This lesson also discusses armature reaction, its ill effects and methods to minimize them.

The topic of calculation of cross magnetizing and demagnetizing mmf's can be avoided depending upon the syllabus requirement and interest.

9.4 DC Generators

The lesson introduces the types of DC generators and their characteristics. Particular emphasis has been given to DC shunt and separately excited generators. The open circuit characteristic (O.C.C) and the load characteristics of both kinds are discussed. It is

explained that from O.C.C and the field resistance line, it is possible to get graphically the load characteristic.

9.5 DC motor starting and speed control

In this important lesson, problem of starting a DC motor with full voltage is discussed, and the necessity of starter is highlighted. The operation of a three-point starter is explained. Various methods of controlling speed of DC shunt and series motors are discussed. At the end, a brief account of various methods of electrical braking is presented.

9.6 Losses, efficiency and testing of D.C machines

To calculate efficiency of any machines, it is essential to know various losses that take place in the machine. Major losses in a DC machine are first enumerated, and Swinburne's test and Hopkinson's tests are explained to estimate them.

9.7 Problem solving in DC machines

In this lesson, some typical problems of DC motors and generators are worked out. This lesson should be consulted from other relevant lectures of the present module whenever you feel it to be necessary.

Module-10 Measuring instruments

The magnitude of various electric signals can be measured with help of measuring instruments. These instruments are classified according to the quantity measured and the principle of operation. The study of DC and AC instruments for measuring voltage, current signals and subsequently induction type energy meter, are described in this module consisting of three lessons (10.1 10.3). at the end of each lesson (10.1 10.3), a set of problem is provided to test the readers understanding.

10.1 Study of DC and AC measuring instruments

The general theory of permanent magnet moving coil (PMMC), moving-iron (MI) instruments and their constructions are briefly discussed in this lesson. PMMC instruments are used as a dc ammeter or dc voltmeter where as MI instruments are basically used for ac current or voltage measurements. Various torques involved in measuring instruments are classified and explained. Subsequently, the advantages, limitations and sources of errors of these instruments are studied therein. Idea behind the multi-range ammeters and voltmeters are introduced by employing several values of shunt resistors or several multiplier resistors along with the meter resistance. In this context some problems are solved to illustrate the meaning of multi-range meters.

10.2 Study of electrodynamics type instruments

Electrodynamics meters can measure both dc signals and ac signals up to a frequency of. The basic construction of electro-dynamometer instruments and their principles of operation are studied in this lesson. Torque expressions for such instruments (as an ammeter, voltmeter and a wattmeter) are derived and then mode of meter connections to the load as an ammeter, voltmeter and a wattmeter are presented. Shunts and multipliers

can be used for extension of meters range. A compensation technique is introduced to eliminate the errors in wattmeter readings. In this lesson, the constructional features and principle of operation of electro dynamometer instruments (ammeter, voltmeter and wattmeter) have been discussed. The sources of error and their corrections are highlighted. Some problems have been worked out for better understanding.

10.3 Study of single-phase induction type energy meter or watt-hour meter

The basic construction with different components of a single-phase induction type energy meter is considered in this lesson. Development of torque expression and errors in energy meters are studied. Some adjustment techniques are discussed to compensate the errors in energy meter. Finally, the extension of meter range using instrument transformers is discussed.

Module 1

Introduction

Lesson 2

Generation, Transmission and Distribution of Electric Power an Overview

Contents

2 Generation, transmission and distribution of electric power 2

2.1 Goals of the lesson ……... 4

2.2 Introduction 4

2.3 Basic idea of generation ……... 4

2.3.1 Changeover from D.C to A.C 5

2.3.2 A.C generator …… 5

2.4 Thermal, hyddel & nuclear power stations …… 6

2.4.1 Thermal plant …… 7

2.4.2 Hydel plants …….. 7

2.4.3 Nuclear plants …… 8

2.5 Transmission of power …….. 10

2.6 Single line representation of power system …….. 13

2.7 Distribution system …… 14

2.8 Conclusion ……. 15

2.9 Answer the following …… 16

Chapter 2

Generation, Transmission and Distribution of Electric Power (Lesson-2)

2.1 Goals of the lesson

After going through the lesson you shall get a broad idea of the following:

1. Different methods of generating electrical power.
2. Issues involved in transporting this power to different types of consumers located generally at far off places from the generating stations.
3. Necessity of substations to cater power to consumers at various voltage levels.

2.2 Introduction

In this lesson a brief idea of a modern power system is outlined. Emphasis is given to create a clear mental picture of a power system to a beginner of the course Electrical Technology. As consumers, we use electricity for various purposes such as:

1. Lighting, heating, cooling and other domestic electrical appliances used in home.
2. Street lighting, flood lighting of sporting arena, office building lighting, powering PCs etc.
3. Irrigating vast agricultural lands using pumps and operating cold storages for various agricultural products.
4. Running motors, furnaces of various kinds, in industries.
5. Running locomotives (electric trains) of railways.

The list above is obviously not exhaustive and could be expanded and categorized in detail further. The point is, without electricity, modern day life will simply come to a stop. In fact, the advancement of a country is measured by the index *per capita consumption of electricity* – more it is more advanced the country is.

2.3 Basic idea of generation

Prior to the discovery of Faraday's Laws of electromagnetic discussion, electrical power was available from batteries with limited voltage and current levels. Although complicated in construction, D.C generators were developed first to generate power in bulk. However, due to limitation of the D.C machine to generate voltage beyond few hundred volts, it was not economical to transmit large amount of power over a long distance. For a given amount of power, the current magnitude ($I = P/V$), hence section of the copper conductor will be large. Thus generation, transmission and distribution of d.c power were restricted to area of few

kilometer radius with no interconnections between generating plants. Therefore, area specific generating stations along with its distribution networks had to be used.

2.3.1 Changeover from D.C to A.C

In later half of eighties, in nineteenth century, it was proposed to have a power system with 3-phase, 50 Hz A.C generation, transmission and distribution networks. Once a.c system was adopted, transmission of large power (MW) at higher transmission voltage become a reality by using *transformers*. Level of voltage could be changed virtually to any other desired level with transformers – which was hitherto impossible with D.C system. Nicola Tesla suggested that constructionally simpler electrical motors (induction motors, without the complexity of commutator segments of D.C motors) operating from 3-phase a.c supply could be manufactured. In fact, his arguments in favor of A.C supply system own the debate on switching over from D.C to A.C system.

2.3.2 A.C generator

A.C power can be generated as a single phase or as a balanced poly-phase system. However, it was found that 3-phase power generation at 50 Hz will be economical and most suitable. Present day three phase generators, used to generate 3-phase power are called *alternators* (synchronous generators). An alternator has a balanced three phase winding on the stator and called the armature. The three coils are so placed in space that there axes are mutually 120° apart as shown in figure 2.1. From the terminals of the armature, 3-phase power is obtained. Rotor houses a field coil and excited by D.C. The field coil produces flux and electromagnetic poles on the rotor surface. If the rotor is driven by an external agency, the flux linkages with three stator coils becomes sinusoidal function of time and sinusoidal voltage is induced in them. However, the induced voltages in the three coils (or phases) will differ in phase by 120° because the present value of flux linkage with R-phase coil will take place after 120° with Y-phase coil and further 120° after, with B-phase coil. A salient pole alternator has projected poles as shown in figure 2.1(a). It has non uniform air gap and is generally used where speed is low. On the other hand a non salient pole alternator has uniform air gap (figure 2.1(b)) and used when speed is high.

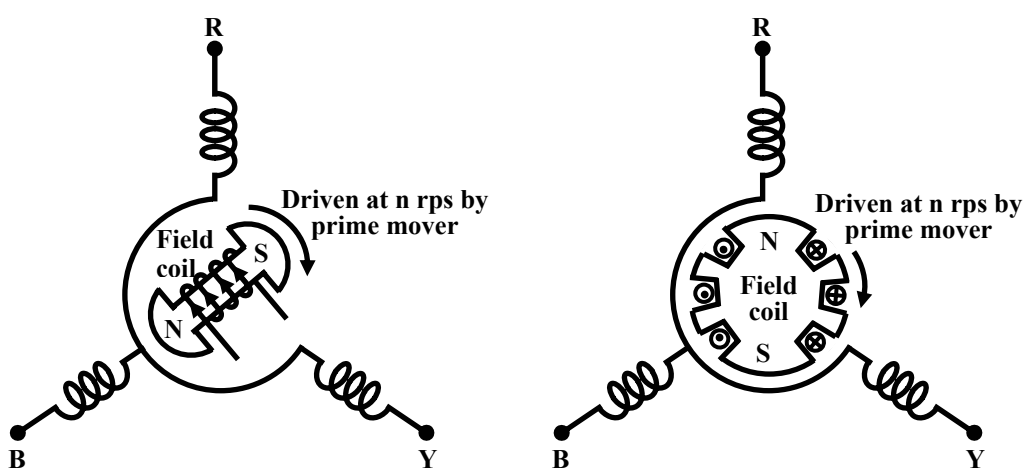

(a) Salient pole generator **(b) Non salient pole generator**

Figure 2.1: 3-phase generators.

Frequency, voltage & interconnected system

The frequency of the generated emf for a p polar generator is given by $f = \frac{p}{2}n$ where n is speed of the generator in rps or $f = \frac{p}{120}n$ when n is in rpm. Frequency of the generated voltage is standardized to 50 HZ in our country and several European countries. In USA and Canada it is 60 Hz. The following table gives the rpm at which the generators with different number of poles are to be driven in order to generate 50 Hz voltage.

Number of poles of Generator	2	4	6	8	10
rpm at which generator to be driven	3000	1500	1000	750	600

A modern power station has more than one generator and these generators are connected in parallel. Also there exist a large number of power stations spread over a region or a country. A regional power grid is created by interconnecting these stations through transmission lines. In other words, all the generators of different power stations, in a grid are in effect connected in parallel. One of the advantages of interconnection is obvious; suppose due to technical problem the generation of a plant becomes nil or less then, a portion of the demand of power in that area still can be made from the other power stations connected to the grid. One can thus avoid complete shut down of power in an area in case of technical problem in a particular station. It can be shown that in an interconnected system, with more number of generators connected in parallel, the system voltage and frequency tend to fixed values irrespective of degree of loading present in the system. This is another welcome advantage of inter connected system. Inter connected system however, is to be controlled and monitored carefully as they may give rise to *instability* leading to collapse of the system.

All electrical appliances (fans, refrigerator, TV etc.) to be connected to A.C supply are therefore designed for a supply frequency of 50 Hz. Frequency is one of the parameters which decides the quality of the supply. It is the responsibility of electric supply company to see that frequency is maintained close to 50 Hz at the consumer premises.

It was pointed out earlier that a maximum of few hundreds of volts (say about 600 to 700 V) could be developed in a D.C generator, the limitation is imposed primarily due to presence of commutator segments. In absence of commutators, present day generated voltage in alternator is much higher, typically around 10 kV to 15 kV. It can be shown that rms voltage induced in a coil is proportional to ϕ and n i.e., $E_{coil} \propto \phi\, n$ where ϕ is the flux per pole and n is speed of the alternator. This can be justified by intuition as well: we know that mere rotating a coil in absence of magnetic flux (ϕ) is not going to induce any voltage. Also presence of flux without any rotation will fail to induce any voltage as you require rate of change of flux linkage in a coil. To control the induced voltage one has to control the d.c field current as speed of the alternator gets fixed by frequency constrain.

2.4 Thermal, hyddel & nuclear power stations

In this section we briefly outline the basics of the three most widely found generating stations – thermal, hydel and nuclear plants in our country and elsewhere.

2.4.1 Thermal plant

We have seen in the previous section that to generate voltage at 50 Hz we have to run the generator at some fixed rpm by some external agency. A turbine is used to rotate the generator. Turbine may be of two types, namely steam turbine and water turbine. In a thermal power station coal is burnt to produce steam which in turn, drives the steam turbine hence the generator (turbo set). In figure 2.2 the elementary features of a thermal power plant is shown.

In a thermal power plant coil is burnt to produce high temperature and high pressure steam in a boiler. The steam is passed through a steam turbine to produce rotational motion. The generator, mechanically coupled to the turbine, thus rotates producing electricity. Chemical energy stored in coal after a couple of transformations produces electrical energy at the generator terminals as depicted in the figure. Thus proximity of a generating station nearer to a coal reserve and water sources will be most economical as the cost of transporting coal gets reduced. In our country coal is available in abundance and naturally thermal power plants are most popular. However, these plants pollute the atmosphere because of burning of coals.

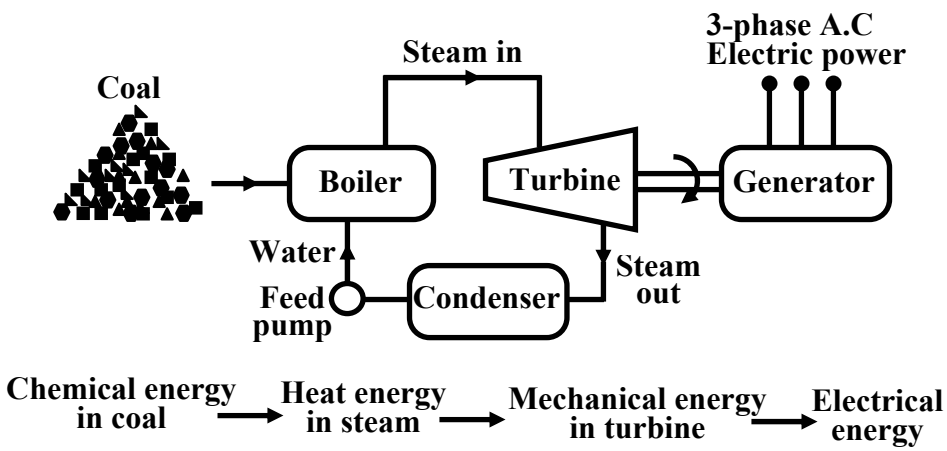

Figure 2.2: Basic components of a thermal generating unit.

Stringent conditions (such as use of more chimney heights along with the compulsory use of electrostatic precipitator) are put by regulatory authorities to see that the effects of pollution is minimized. A large amount of ash is produced every day in a thermal plant and effective handling of the ash adds to the running cost of the plant. Nonetheless 57% of the generation in out country is from thermal plants. The speed of alternator used in thermal plants is 3000 rpm which means 2-pole alternators are used in such plants.

2.4.2 Hydel plants

In a hydel power station, water head is used to drive water turbine coupled to the generator. Water head may be available in hilly region naturally in the form of water reservoir (lakes etc.) at the hill tops. The potential energy of water can be used to drive the turbo generator set installed at the base of the hills through piping called *pen stock*. Water head may also be created artificially by constructing dams on a suitable river. In contrast to a thermal plant, hydel power plants are eco-friendly, neat and clean as no fuel is to be burnt to produce electricity. While running cost of such plants are low, the initial installation cost is rather high compared to a thermal plants due to massive civil construction necessary. Also sites to be selected for such plants depend upon natural availability of water reservoirs at hill tops or availability of suitable

rivers for constructing dams. Water turbines generally operate at low rpm, so number of poles of the alternator are high. For example a 20-pole alternator the rpm of the turbine is only 300 rpm.

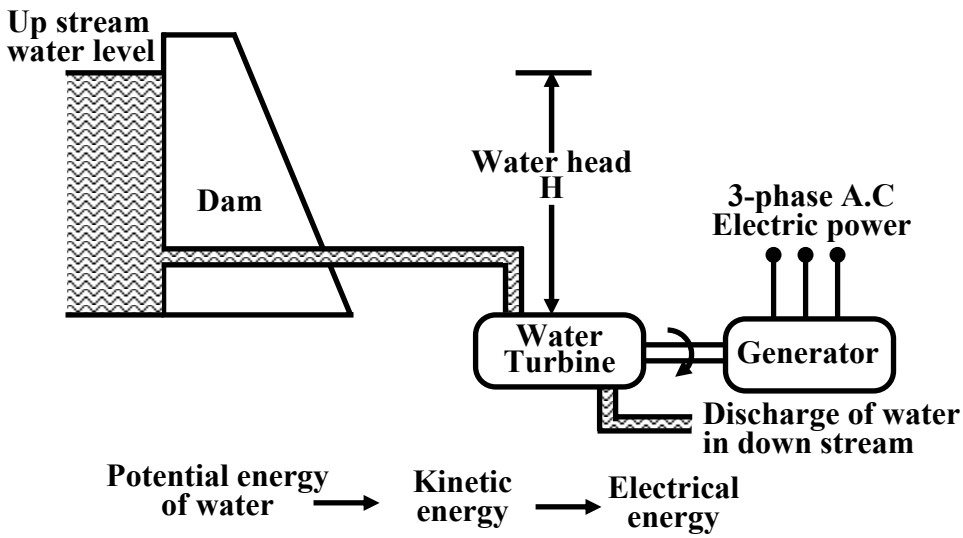

Figure 2.3: Basic components of a hydel generating unit.

2.4.3 Nuclear plants

As coal reserve is not unlimited, there is natural threat to thermal power plants based on coal. It is estimated that within next 30 to 40 years, coal reserve will exhaust if it is consumed at the present rate. Nuclear power plants are thought to be the solution for bulk power generation. At present the installed capacity of unclear power plant is about 4300 MW and expected to expand further in our country. The present day atomic power plants work on the principle of nuclear fission of ^{235}U. In the natural uranium, ^{235}U constitutes only 0.72% and remaining parts is constituted by 99.27% of ^{238}U and only about 0.05% of ^{234}U. The concentration of ^{235}U may be increased to 90% by gas diffusion process to obtain enriched ^{235}U. When ^{235}U is bombarded by neutrons a lot of heat energy along with additional neutrons are produced. These new neutrons further bombard ^{235}U producing more heat and more neutrons. Thus a chain reaction sets up. However this reaction is allowed to take place in a controlled manner inside a closed chamber called nuclear reactor. To ensure sustainable chain reaction, moderator and control rods are used. Moderators such as heavy water (deuterium) or very pure carbon ^{12}C are used to reduce the speed of neutrons. To control the number neutrons, control rods made of cadmium or boron steel are inserted inside the reactor. The control rods can absorb neutrons. If we want to decrease the number neutrons, the control rods are lowered down further and vice versa. The heat generated inside the reactor is taken out of the chamber with the help of a coolant such as liquid sodium or some gaseous fluids. The coolant gives up the heat to water in heat exchanger to convert it to steam as shown in figure 2.4. The steam then drives the turbo set and the exhaust steam from the turbine is cooled and fed back to the heat exchanger with the help of water feed pump. Calculation shows that to produce 1000 MW of electrical power in coal based thermal plant, about 6×10^6 Kg of coal is to be burnt daily while for the same amount of power, only about 2.5 Kg of ^{235}U is to be used per day in a nuclear power stations.

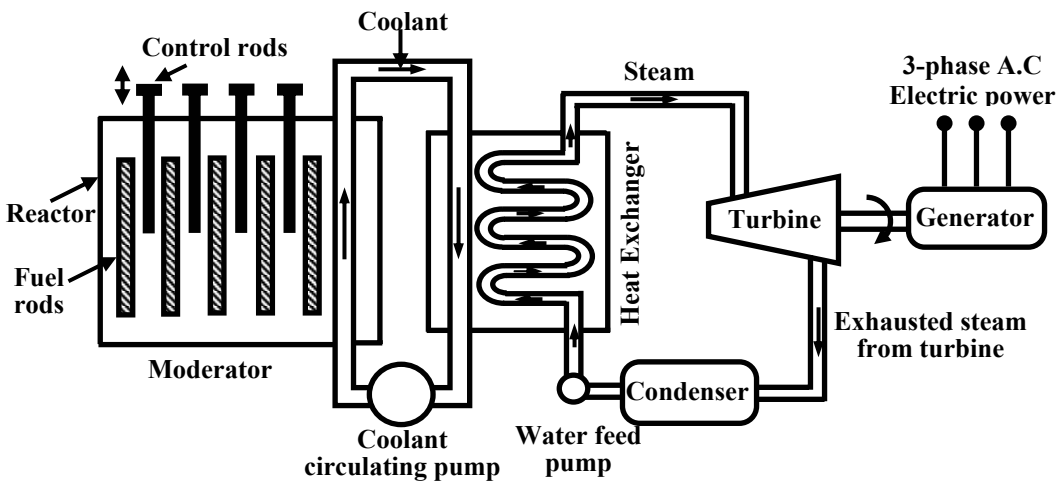

Figure 2.4: Nuclear power generation.

The initial investment required to install a nuclear power station is quite high but running cost is low. Although, nuclear plants produce electricity without causing air pollution, it remains a dormant source of radiation hazards due to leakage in the reactor. Also the used fuel rods are to be carefully handled and disposed off as they still remain radioactive.

The reserve of ^{235}U is also limited and can not last longer if its consumption continues at the present rate. Naturally search for alternative fissionable material continues. For example, plutonium (^{239}Pu) and (^{233}U) are fissionable. Although they are not directly available. Absorbing neutrons, ^{238}U gets converted to fissionable plutonium ^{239}Pu in the atomic reactor described above. The used fuel rods can be further processed to extract ^{239}Pu from it indirectly increasing the availability of fissionable fuel. Effort is also on to convert thorium into fissionable ^{233}U. Incidentally, India has very large reserve of thorium in the world.

Total approximate generation capacity and Contribution by thermal, hydel and nuclear generation in our country are given below.

Method of generation	in MW	% contribution
Thermal	77 340	69.4
Hydel	29 800	26.74
Nuclear	2 720	3.85
Total generation	1 11 440	-

Non conventional sources of energy

The bulk generation of power by thermal, hydel and nuclear plants are called conventional methods for producing electricity. Search for newer avenues for harnessing eco friendly electrical power has already begun to meet the future challenges of meeting growing power demand. Compared to conventional methods, the capacity in terms of MW of each non-conventional plant is rather low, but most of them are eco friendly and self sustainable. Wind power, solar power, MHD generation, fuel cell and power from tidal waves are some of the promising alternative sources of energy for the future.

2.5 Transmission of power

The huge amount of power generated in a power station (hundreds of MW) is to be transported over a long distance (hundreds of kilometers) to load centers to cater power to consumers with the help of transmission line and transmission towers as shown in figure 2.5.

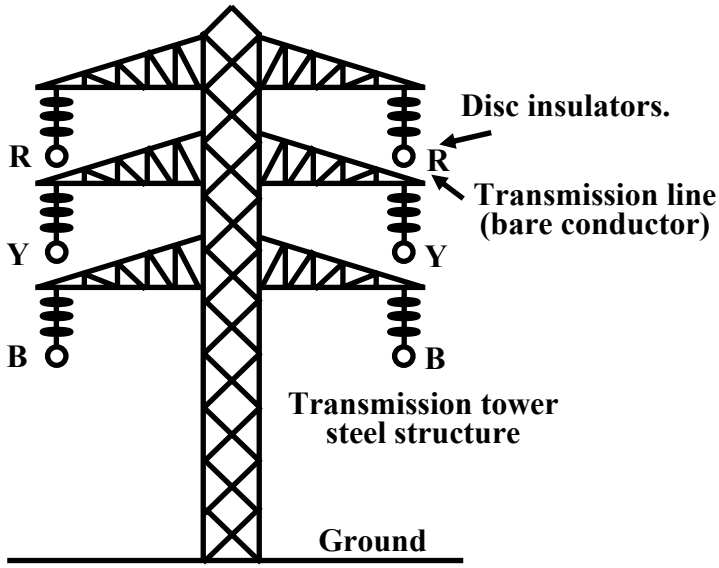

Figure 2.5: Transmission tower.

To give an idea, let us consider a generating station producing 120 MW power and we want to transmit it over a large distance. Let the voltage generated (line to line) at the alternator be 10 kV. Then to transmit 120 MW of power at 10 kV, current in the transmission line can be easily calculated by using power formula circuit (which you will learn in the lesson on A.C circuit analysis) for 3-phases follows:

$$I = \frac{P}{\sqrt{3}\,V_L \cos\theta} \text{ where } \cos\theta \text{ is the power factor}$$

$$= \frac{120\times10^6}{\sqrt{3}\times10\times10^3\times0.8}$$

$$\therefore I = 8660 \text{ A}$$

Instead of choosing 10 kV transmission voltage, if transmission voltage were chosen to be 400 kV, current value in the line would have been only 261.5 A. So sectional area of the transmission line (copper conductor) will now be much smaller compared to 10 kV transmission voltage. In other words the cost of conductor will be greatly reduced if power is transmitted at higher and higher transmission voltage. The use of higher voltage (hence lower current in the line) reduces voltage drop in the line resistance and reactance. Also transmission losses is reduced. Standard transmission voltages used are 132 kV or 220 kV or 400 kV or 765 kV depending upon how long the transmission lines are.

Therefore, after the generator we must have a step up transformer to change the generated voltage (say 10 kV) to desired transmission voltage (say 400 kV) before transmitting it over a long distance with the help of transmission lines supported at regular intervals by transmission towers. It should be noted that while magnitude of current decides the cost of copper, level of

voltage decides the cost of insulators. The idea is, in a spree to reduce the cost of copper one can not indefinitely increase the level of transmission voltage as cost of insulators will offset the reduction copper cost. At the load centers voltage level should be brought down at suitable values for supplying different types of consumers. Consumers may be (1) big industries, such as steel plants, (2) medium and small industries and (3) offices and domestic consumers. Electricity is purchased by different consumers at different voltage level. For example big industries may purchase power at 132 kV, medium and big industries purchase power at 33 kV or 11 kV and domestic consumers at rather low voltage of 230V, single phase. Thus we see that 400 kV transmission voltage is to be brought down to different voltage levels before finally delivering power to different consumers. To do this we require obviously step down transformers.

Substations

Substations are the places where the level of voltage undergoes change with the help of transformers. Apart from transformers a substation will house switches (called circuit breakers), meters, relays for protection and other control equipment. Broadly speaking, a big substation will receive power through incoming lines at some voltage (say 400 kV) changes level of voltage (say to 132 kV) using a transformer and then directs it out wards through outgoing lines. Pictorially such a typical power system is shown in figure 2.6 in a short of block diagram. At the lowest voltage level of 400 V, generally 3-phase, 4-wire system is adopted for domestic connections. The fourth wire is called the neutral wire (N) which is taken out from the common point of the star connected secondary of the 6 kV/400 V distribution transformer.

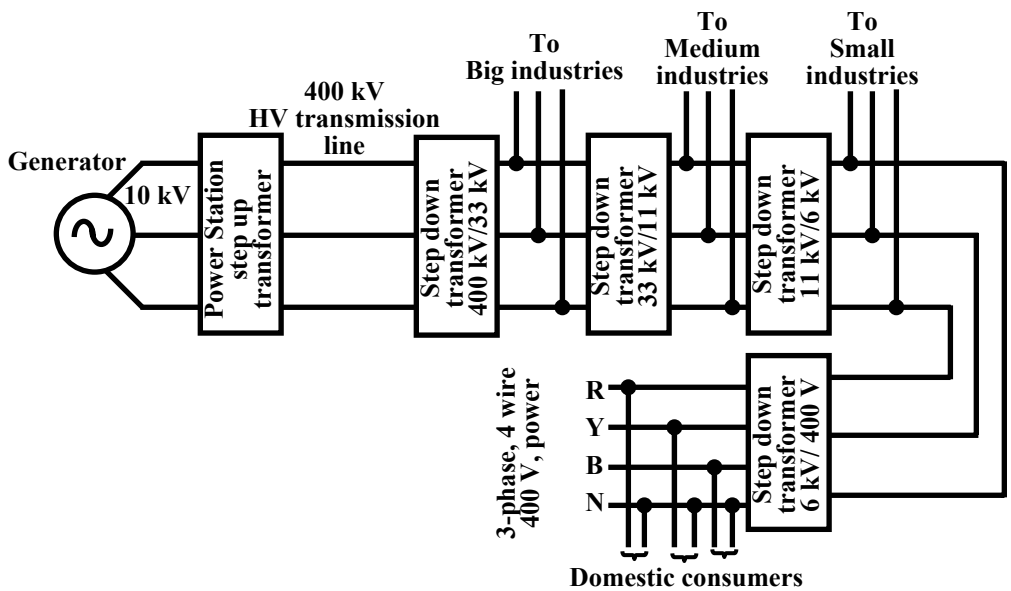

Figure 2.6: Typical voltage levels in a power system.

Some important components/equipments in substation

As told earlier, the function of a substation is to receive power at some voltage through incoming lines and transmit it at some other voltage through outgoing lines. So the most important equipment in a substation is transformer(s). However, for flexibility of operation and protection transformer and lines additional equipments are necessary.

Suppose the transformer goes out of order and maintenance work is to be carried out. Naturally the transformer must be isolated from the incoming as well as from the outgoing lines by using special type of heavy duty (high voltage, high current) switches called *circuit breakers*. Thus a circuit breaker may be closed or opened manually (functionally somewhat similar to switching on or off a fan or a light whenever desired with the help of a ordinary switch in your house) in substation whenever desired. However unlike a ordinary switch, a circuit breaker must also operate (i.e., become opened) *automatically* whenever a fault occurs or overloading takes place in a feeder or line. To achieve this, we must have a current sensing device called CT (current transformer) in each line. A CT simply steps down the large current to a proportional small secondary current. Primary of the CT is connected in series with the line. A 1000 A/5 A CT will step down the current by a factor of 200. So if primary current happens to be 800 A, secondary current of the CT will be 4 A.

Suppose the rated current of the line is 1000 A, and due to any reason if current in the line exceeds this limit we want to operate the circuit breaker automatically for disconnection.

In figure 2.7 the basic scheme is presented to achieve this. The secondary current of the CT is fed to the relay coil of an *overcurrent relay*. Here we are not going into constructional and operational details of a over current relay but try to tell how it functions. Depending upon the strength of the current in the coil, an ultimately an electromagnetic torque acts on an aluminum disc restrained by a spring. Spring tension is so adjusted that for normal current, the disc does not move. However, if current exceeds the normal value, torque produced will overcome the spring tension to rotate the disc about a vertical spindle to which a long arm is attached. To the arm a copper strip is attached as shown figure 2.8. Thus the arm too will move whenever the disk moves.

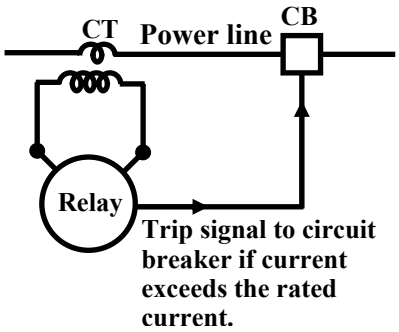

Figure 2.7: Basic scheme of protection.

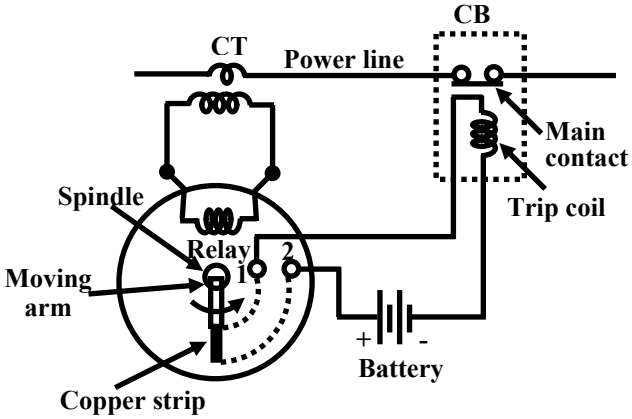

Figure 2.8: Relay and CB.

The relay has a pair of *normally opened* (NO) contacts 1 & 2. Thus, there will exist open circuit between 1 & 2 with normal current in the power line. However, during fault condition in the line or overloading, the arm moves in the anticlockwise direction till it closes the terminals 1 & 2 with the help of the copper strip attached to the arm as explained pictorially in the figure 2.8. This short circuit between 1 & 2 completes a circuit comprising of a battery and the *trip* coil of the circuit breaker. The opening and closing of the main contacts of the circuit breaker depends on whether its trip coil is energized or not. It is interesting to note that trip circuit supply is to be made independent of the A.C supply derived from the power system we want to protect. For this reason, we expect batteries along with battery charger to be present in a substation.

Apart from above there will be other types of protective relays and various meters indicating current, voltage, power etc. To measure and indicate the high voltage (say 6 kV) of the line, the voltage is stepped down to a safe value (say 110V) by transformer called *potential transformer*

(PT). Across the secondary of the PT, MI type indicating voltmeter is connected. For example a voltage rating of a PT could be 6000 V/110 V. Similarly, Across the secondary we can connect a low range ammeter to indicate the line current.

2.6 Single line representation of power system

Trying to represent a practical power system where a lot of interconnections between several generating stations involving a large number of transformers using three lines corresponding to R, Y and B phase will become unnecessary clumsy and complicated. To avoid this, a single line along with some symbolical representations for generator, transformers substation buses are used to represent a power system rather neatly. For example, the system shown in 2.6 with three lines will be simplified to figure 2.9 using single line.

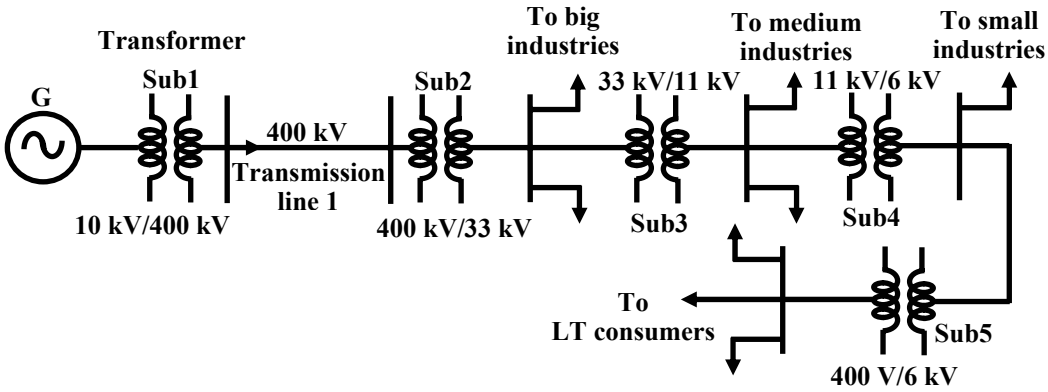

Figure 2.9: Single line representation of power system.

As another example, an interconnected power system is represented in the self explained figure 2.10 – it is hoped that you understand the important features communicated about the system through this figure.

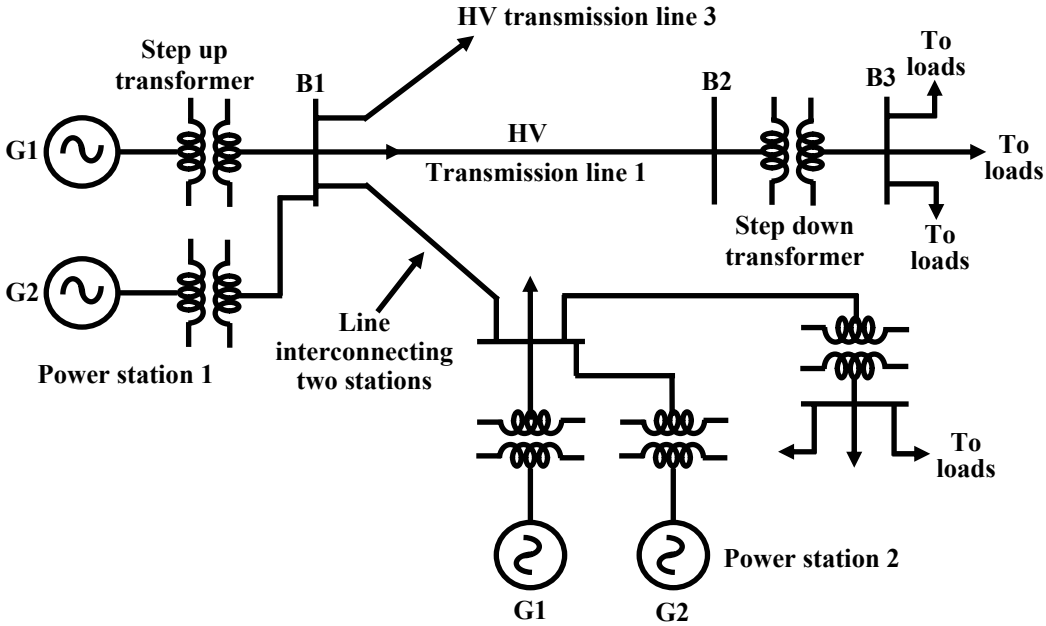

Figure 2.10: Single line representation of power system.

2.7 Distribution system

Till now we have learnt how power at somewhat high voltage (say 33 kV) is received in a substation situated near load center (a big city). The loads of a big city are primarily residential complexes, offices, schools, hotels, street lighting etc. These types of consumers are called LT (low tension) consumers. Apart from this there may be medium and small scale industries located in the outskirts of the city. LT consumers are to be supplied with single phase, 220 V, 40 Hz. We shall discuss here how this is achieved in the substation receiving power at 33 kV. The scheme is shown in figure 2.11.

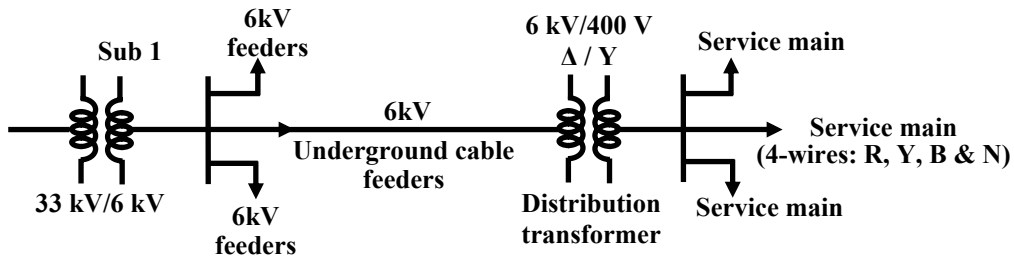

Figure 2.11: Typical Power distribution scheme.

Power receive at a 33 kV substation is first stepped down to 6 kV and with the help of under ground cables (called feeder lines), power flow is directed to different directions of the city. At the last level, step down transformers are used to step down the voltage form 6 kV to 400 V. These transformers are called distribution transformers with 400 V, star connected secondary. You must have noticed such transformers mounted on poles in cities beside the roads. These are called pole mounted substations. From the secondary of these transformers 4 terminals (R, Y, B and N) come out. N is called the neutral and taken out from the common point of star connected secondary. Voltage between any two phases (i.e., R-Y, Y-B and B-R) is 400 V and between any phase and neutral is 230 V$\left(= 400/\sqrt{3}\right)$. Residential buildings are supplied with single phase 230V, 50Hz. So individual are to be supplied with any one of the phases and neutral. Supply authority tries to see that the loads remain evenly balanced among the phases as far as possible. Which means roughly one third of the consumers will be supplied from R-N, next one third from Y-N and the remaining one third from B-N. The distribution of power from the pole mounted substation can be done either by (1) overhead lines (bare conductors) or by (2) underground cables. Use of overhead lines although cheap, is often accident prone and also theft of power by hooking from the lines take place. Although costly, in big cities and thickly populated areas underground cables for distribution of power, are used.

2.8 Conclusion

In this lesson, a brief idea of generation, transmission and distribution of electrical power is given - which for obvious reason is neither very elaborative nor exhaustive. Nonetheless, it gives a reasonable understanding of the system for a beginner going to undertake the course on electrical technology. If you ever get a chance to visit a substation or power station – don't miss it.

Some basic and important points, in relation to a modern power system, are summarized below:

1. Generation, transmission and distribution of electric power in our country is carried out as 3-phase system at 50 Hz.
2. Three most important conventional methods of power generation in out country are: coal based thermal plants, Hydel plants and nuclear plants.
3. Load centers (where the power will be actually consumed) are in general situated far away from the generating station. So to transmit the large amount of power (hundreds of MW) efficiently and economically over long distance, high transmission voltage (such as 400 kV, 220 kV) is used.
4. Material used for transmission lines is bare is bare copper conductors which are supported at regular intervals by steel towers. Stack of disk type ceramic insulators are used between the HV line and the steel tower.
5. Level of current decides the section of the line conductor and the level of voltage decides the amount of insulation required.

2.9 Answer the following

1. Name three conventional ways of generating power. Of these three, which one contributes maximum generation in India.
2. What number of phases and frequency are adopted to generate, transmit and distribute electrical power in modern power system?
3. Name the types of generators (alternators) used in (1) thermal plant and (2) in hydel power plant.
4. In a hydel power station, the number of poles of an alternator is 24. At what rpm the alternator must be driven to produce 50 Hz voltage?
5. Give some typical value of generated voltage in a power station. Why is it necessary to step up the voltage further before transmitting?
6. What is a substation? What important equipments are found in a substation?
7. With the help of a schematic diagram explain how a overcurrent relay protects a line during short circuit fault.
8. What are the functions of CT and PT in a substation?
9. The ammeter reading connected across a CT secondary is 3 A and the voltage reading connected across a PT is 90 V. If the specification of the CT and PT are respectively 1000 A/5 A and 6.6 kV/110 V, What is the actual current and voltage of the line?
10. What is a pole mounted substation? At what voltage levels are the found in a power system?
11. Why are batteries used in a substation.
12. Are different power stations interconnected? If so, why?
13. What are the differences between a coal based thermal plant and a nuclear power plant.

Module 2

DC Circuit

Lesson 3

Introduction of Electric Circuit

Objectives

- Familiarity with and understanding of the basic elements encountered in electric networks.
- To learn the fundamental differences between linear and nonlinear circuits.
- To understand the Kirchhoff's voltage and current laws and their applications to circuits.
- Meaning of circuit ground and the voltages referenced to ground.
- Understanding the basic principles of voltage dividers and current dividers.
- Potentiometer and loading effects.
- To understand the fundamental differences between ideal and practical voltage and current sources and their mathematical models to represent these source models in electric circuits.
- Distinguish between independent and dependent sources those encountered in electric circuits.
- Meaning of delivering and absorbing power by the source.

L.3.1 Introduction

The interconnection of various electric elements in a prescribed manner comprises as an electric circuit in order to perform a desired function. The electric elements include controlled and uncontrolled source of energy, resistors, capacitors, inductors, etc. Analysis of electric circuits refers to computations required to determine the unknown quantities such as voltage, current and power associated with one or more elements in the circuit. To contribute to the solution of engineering problems one must acquire the basic knowledge of electric circuit analysis and laws. Many other systems, like mechanical, hydraulic, thermal, magnetic and power system are easy to analyze and model by a circuit. To learn how to analyze the models of these systems, first one needs to learn the techniques of circuit analysis. We shall discuss briefly some of the basic circuit elements and the laws that will help us to develop the background of subject.

L-3.1.1 Basic Elements & Introductory Concepts

Electrical Network: A combination of various electric elements (Resistor, Inductor, Capacitor, Voltage source, Current source) connected in any manner what so ever is called an electrical network. We may classify circuit elements in two categories, passive and active elements.

Passive Element: The element which receives energy (or absorbs energy) and then either converts it into heat (R) or stored it in an electric (C) or magnetic (L) field is called passive element.

Active Element: The elements that supply energy to the circuit is called active element. Examples of active elements include voltage and current sources, generators, and electronic devices that require power supplies. A transistor is an active circuit element, meaning that it can amplify power of a signal. On the other hand, transformer is not an active element because it does not amplify the power level and power remains same both

in primary and secondary sides. Transformer is an example of passive element.

Bilateral Element: Conduction of current in both directions in an element (example: Resistance; Inductance; Capacitance) with same magnitude is termed as bilateral element.

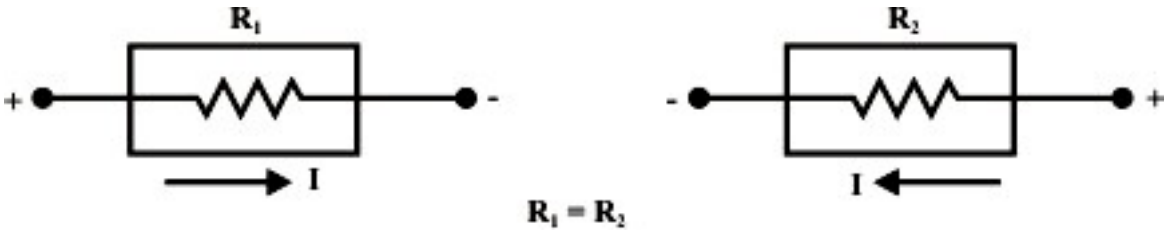

Unilateral Element: Conduction of current in one direction is termed as unilateral (example: Diode, Transistor) element.

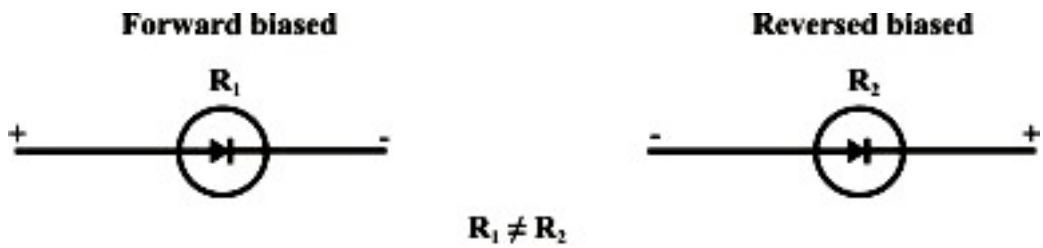

Meaning of Response: An application of input signal to the system will produce an output signal, the behavior of output signal with time is known as the response of the system.

L-3.2 Linear and Nonlinear Circuits

Linear Circuit: Roughly speaking, a linear circuit is one whose parameters do not change with voltage or current. More specifically, a linear system is one that satisfies (i) homogeneity property [response of $\alpha u(t)$ equals α times the response of $u(t)$, $S(\alpha u(t))$ = $\alpha S(u(t))$ for all α; and $u(t)$] (ii) additive property [that is the response of system due to an input ($\alpha_1 u_1(t) + \alpha_2 u_2(t)$) equals the sum of the response of input $\alpha_1 u_1(t)$ and the response of input $\alpha_2 u_2(t)$, $S(\alpha_1 u_1(t) + \alpha_2 u_2(t))$ = $\alpha_1 S(u_1(t)) + \alpha_2 S(u_2(t))$.] When an input $u_1(t)$ *or* $u_2(t)$ is applied to a system "S", the corresponding output response of the system is observed as $S(u_1(t)) = y_1(t)$ *or* $S(u_2(t)) = y_2(t)$ respectively. Fig. 3.1 explains the meaning of homogeneity and additive properties of a system.

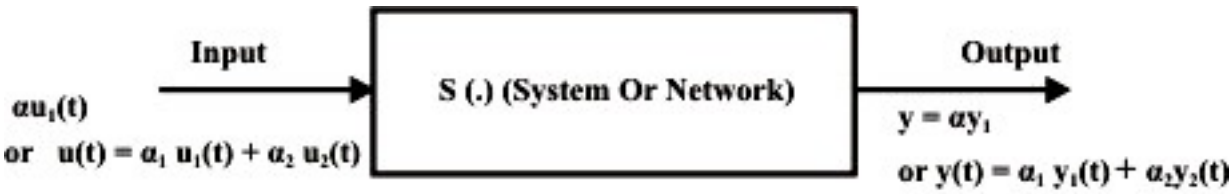

Fig. 3.1: Input output behavior of a system

Non-Linear Circuit: Roughly speaking, a non-linear system is that whose parameters change with voltage or current. More specifically, non-linear circuit does not obey the homogeneity and additive properties. Volt-ampere characteristics of linear and non-linear elements are shown in figs. 3.2 - 3.3. In fact, a circuit is linear if and only if its input and output can be related by a straight line passing through the origin as shown in fig.3.2. Otherwise, it is a nonlinear system.

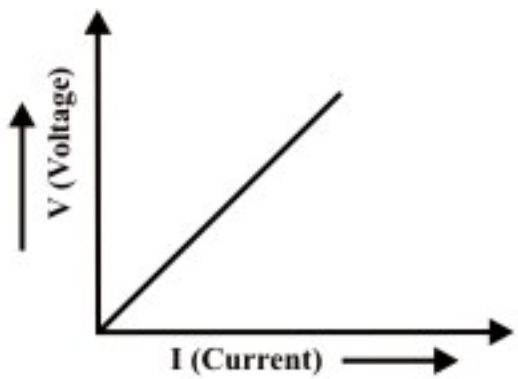

Fig. 3.2: V-I characteristics of linear element.

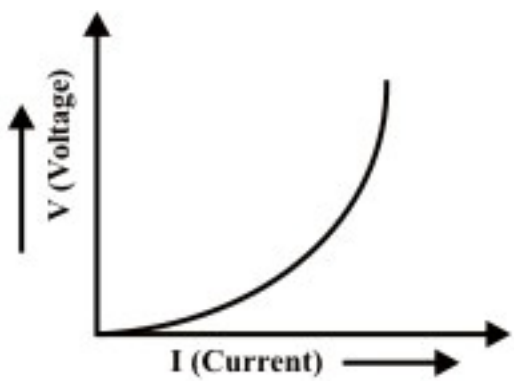

Fig. 3.3: V-I characteristics of non-linear element.

Potential Energy Difference: The voltage or potential energy difference between two points in an electric circuit is the amount of energy required to move a unit charge between the two points.

L-3.3 Kirchhoff's Laws

Kirchhoff's laws are basic analytical tools in order to obtain the solutions of currents and voltages for any electric circuit; whether it is supplied from a direct-current system or an alternating current system. But with complex circuits the equations connecting the currents and voltages may become so numerous that much tedious algebraic work is involve in their solutions.

Elements that generally encounter in an electric circuit can be interconnected in various possible ways. Before discussing the basic analytical tools that determine the currents and voltages at different parts of the circuit, some basic definition of the following terms are considered.

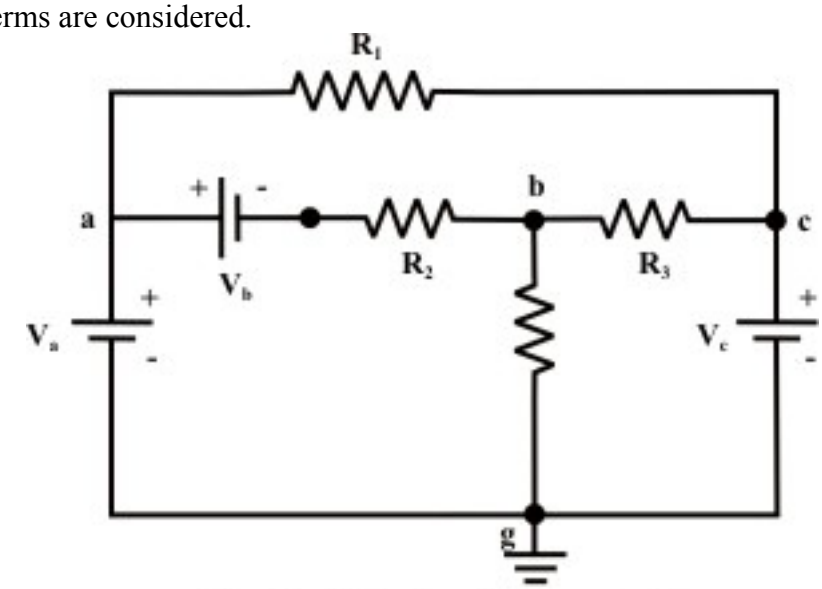

Fig. 3.4: A simple resistive network

- Node- A node in an electric circuit is a point where two or more components are connected together. This point is usually marked with dark circle or dot. The circuit in fig. 3.4 has nodes a, b, c, and g. Generally, a point, or a node in an circuit specifies a certain voltage level with respect to a reference point or node.
- Branch- A branch is a conducting path between two nodes in a circuit containing the electric elements. These elements could be sources, resistances, or other elements. Fig.3.4 shows that the circuit has six branches: three resistive branches (a-c, b-c, and b-g) and three branches containing voltage and current sources (a-, a-, and c-g).
- Loop- A loop is any closed path in an electric circuit i.e., a closed path or loop in a circuit is a contiguous sequence of branches which starting and end points for tracing the path are, in effect, the same node and touches no other node more than once. Fig. 3.4 shows three loops or closed paths namely, a-b-g-a; b-c-g-b; and a-c-b-a. Further, it may be noted that the outside closed paths a-c-g-a and a-b-c-g-a are also form two loops.
- Mesh- a mesh is a special case of loop that does not have any other loops within it or in its interior. Fig. 3.4 indicates that the first three loops (a-b-g-a; b-c-g-b; and a-c-b-a) just identified are also 'meshes' but other two loops (a-c-g-a and a-b-c-g-

a) are not.

With the introduction of the Kirchhoff's laws, a various types of electric circuits can be analyzed.

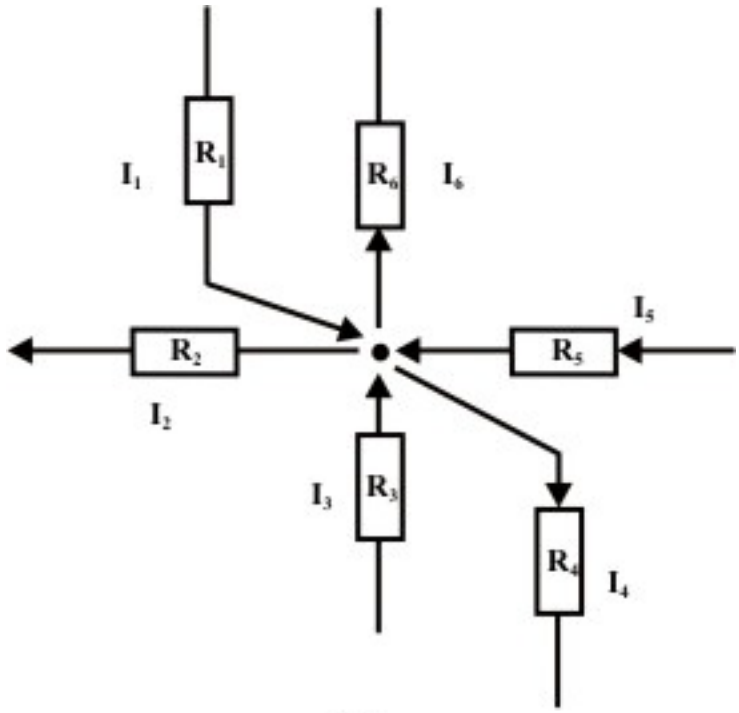

(a)

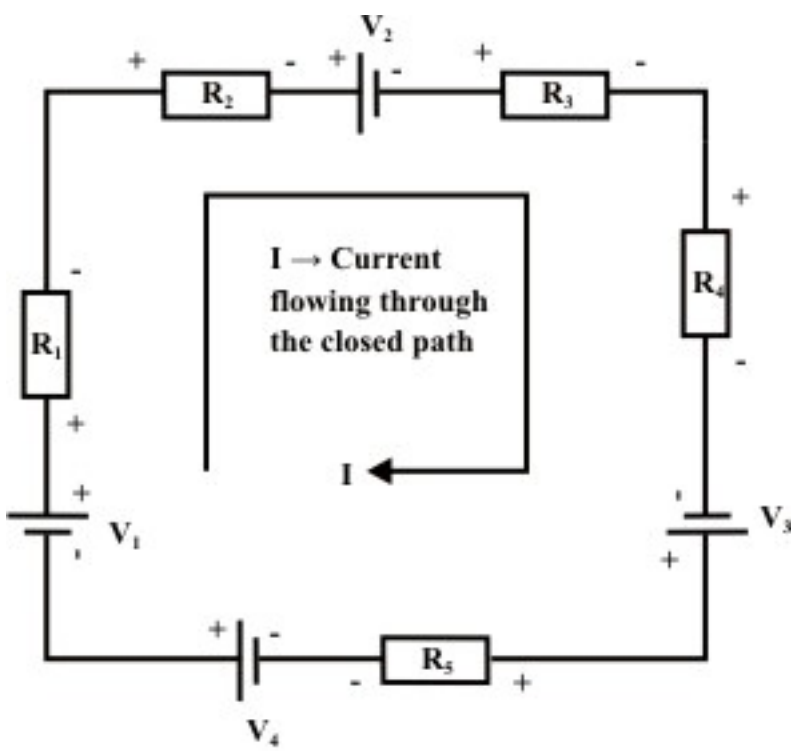

(b)

Fig. 3.5: Illustrates the Kirchhoff's laws

Kirchhoff's Current Law (KCL): KCL states that at any node (junction) in a circuit the algebraic sum of currents entering and leaving a node at any instant of time must be equal to zero. Here currents entering(+ve sign) and currents leaving (-ve sign) the node must be assigned opposite algebraic signs (see fig. 3.5 (a), $I_1 - I_2 + I_3 - I_4 + I_5 - I_6 = 0$).

Kirchhoff's Voltage Law (KVL): It states that in a closed circuit, the algebraic sum of all source voltages must be equal to the algebraic sum of all the voltage drops. Voltage drop is encountered when current flows in an element (resistance or load) from the higher-potential terminal toward the lower potential terminal. Voltage rise is encountered when current flows in an element (voltage source) from lower potential terminal (or negative terminal of voltage source) toward the higher potential terminal (or positive terminal of voltage source). Kirchhoff's voltage law is explained with the help of fig. 3.5(b).

KVL equation for the circuit shown in fig. 3.5(b) is expressed as (we walk in clockwise direction starting from the voltage source V_1 and return to the same point)

$$V_1 - IR_1 - IR_2 - V_2 - IR_3 - IR_4 + V_3 - IR_5 - V_4 = 0$$

$$V_1 - V_2 + V_3 - V_4 = IR_1 + IR_2 + IR_3 + IR_4 + IR_5$$

Example: L-3.1 For the circuit shown in fig. 3.6, calculate the potential of points $A, B, C,\ and\ E$ with respect to point D. Find also the value of voltage source V_1.

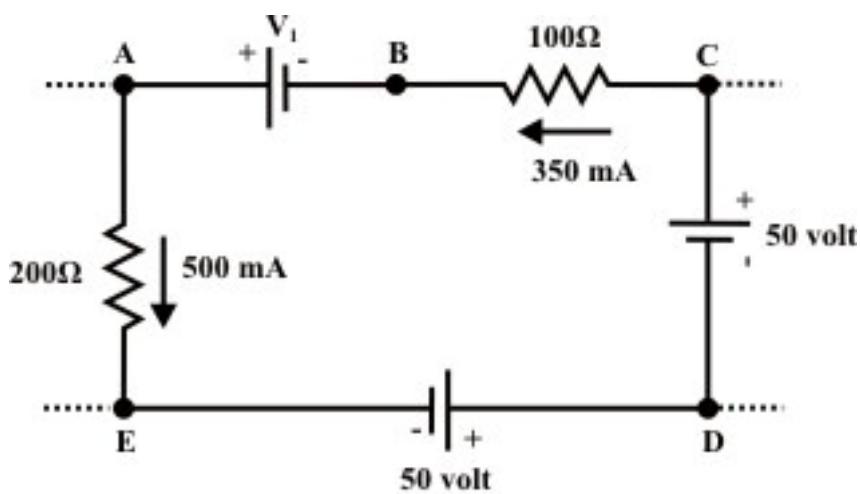

Fig. 3.6: A part of dc resistive circuit is presented

Solution Let us assume we move in clockwise direction around the close path D-E-A-B-C-D and stated the following points.

- 50 *volt* source is connected between the terminals D & E and this indicates that the point E is lower potential than D. So, V_{ED} (i.e., it means potential of E with respect to D) is -50 *volt* and similarly $V_{CD} = 50\,volt$ or $V_{DC} = -50\,volt$.
- $500\,mA$ current is flowing through $200\,\Omega$ resistor from $A\ to\ E$ and this implies that point A is higher potential than E. If we move from lower potential (E) to

higher potential (A), this shows there is a rise in potential. Naturally, $V_{AE} = 500 \times 10^{-3} \times 200 = 100\,volt$ and $V_{AD} = -50 + 100 = 50\,volt$.
Similarly, $V_{CB} = 350 \times 10^{-3} \times 100 = 35\,volt$

- V_1 voltage source is connected between A & B and this indicates that the terminal B is lower potential than A i.e., $V_{AB} = V_1\,volt$ or $V_{BA} = -V_1\,volt.$. One can write the voltage of point B with respect to D is $V_{BD} = 50 - V_1\,volt.$
- One can write KVL law around the closed-loop D-E-A-B-C-D as $V_{ED} + V_{AE} + V_{BA} + V_{CB} + V_{DC} = 0$

$-50 + 100 - V_1 + 35 - 50 = 0 \Rightarrow V_1 = 35\,volt.$

Now we have $V_{ED} = -50\,volt$, $V_{AD} = -50 + 100 = 50\,volt, V_{BD} = 50 - 35 = 15\,volt,$
$V_{CD} = 15 + 35 = 50\,volt.$

L-3.4 Meaning of Circuit Ground and the Voltages referenced to Ground

In electric or electronic circuits, usually maintain a reference voltage that is named "ground voltage" to which all voltages are referred. This reference voltage is thus at ground potential or zero potential and each other terminal voltage is measured with respect to ground potential, some terminals in the circuit will have voltages above it (positive) and some terminals in the circuit will have voltages below it (negative) or in other words, some potential above or below ground potential or zero potential.
Consider the circuit as shown in fig. 3.7 and the common point of connection of elements V_1 & V_3 is selected as ground (or reference) node. When the voltages at different nodes are referred to this ground (or reference) point, we denote them with double subscripted voltages V_{ED}, V_{AD}, V_{BD}, *and* V_{CD}. Since the point D is selected as ground potential or zero potential, we can write V_{ED} as V_E, V_{AD} as V_A and so on.

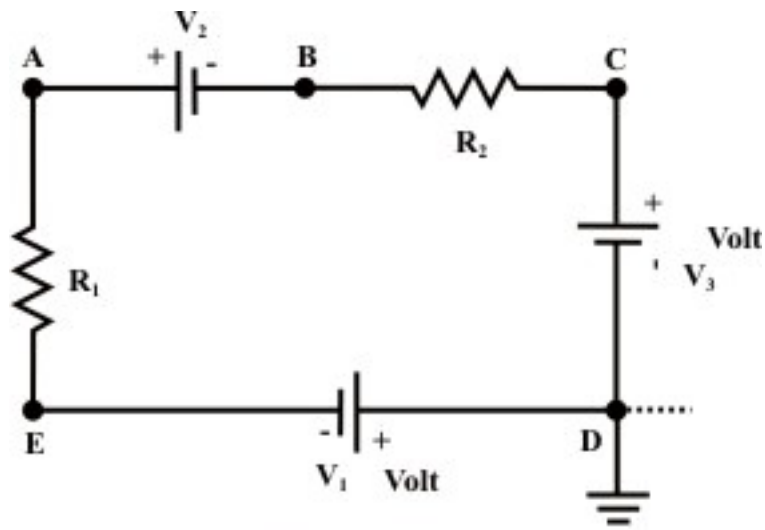

Fig. 3.7: A Simple dc resistive circuit

In many cases, such as in electronic circuits, the chassis is shorted to the earth itself for safety reasons.

L-3.5 Understanding the Basic Principles of Voltage Dividers and Current dividers

L-3.5.1 Voltage Divider

Very often, it is useful to think of a series circuit as a voltage divider. The basic idea behind the voltage divider is to assign a portion of the total voltage to each resistor. In Figure 3.8 (a), suppose that the source voltage is E. By the circuit configuration shown one can divide off any voltage desired (V_{out}), less than the supply voltage E, by adjusting R_1, R_2 *and* R_3.

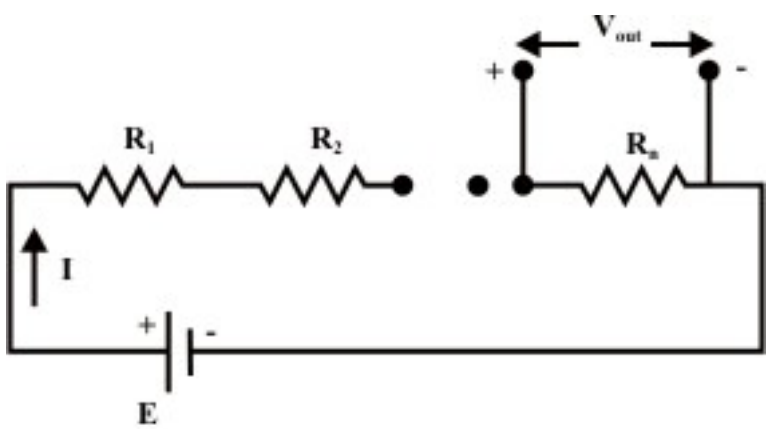

Fig. 3.8(a): Voltage Divider

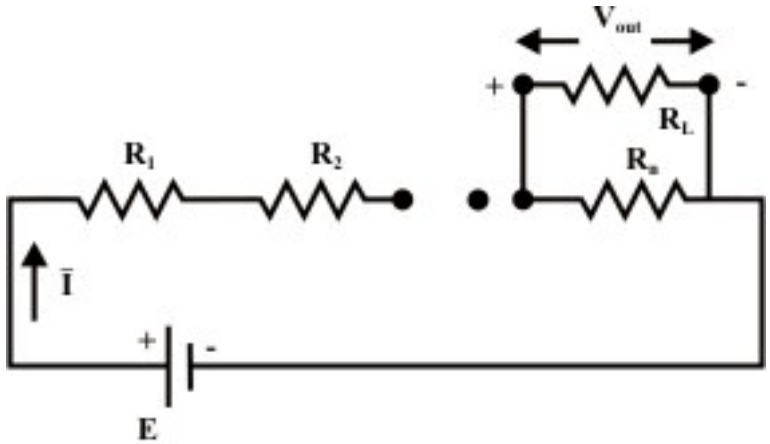

Fig. 3.8(b): Voltage Divider With Load

From figure 3.8(a) the output of the voltage divider V_{out} is computed by the relation

$$V_{out} = I\,R_n = \frac{E}{R_1 + R_2 + \ldots.. + R_n} R_n \tag{3.1}$$

Equation (3.1) indicates that the voltage across any resistor R_i (R_i $i = 1, 2, \ldots..n$) in a series circuit is equal to the applied voltage (E) across the circuit multiplied by a factor $\frac{R_i}{\sum_{j=1}^{n} R_j}$. It should be noted that this expression is only valid if the same current I flows through all the resistors. If a load resistor R_L is connected to the voltage divider (see figure 3.8(b)), one can easily modify the expression (3.1) by simply combining R_L & R_n in parallel to find a new $\bar{R}_n$ and replacing R_n by $\bar{R}_n$ in equation (3.1).

<u>Example</u>: L-3.2 For the circuit shown in Figure 3.9,

(i) Calculate V_{out}, ignoring the internal resistance R_s of the source E. Use voltage division.

(ii) Recalculate V_{out} taking into account the internal resistance R_s of the source. What percent error was introduced by ignoring R_s in part (i)?

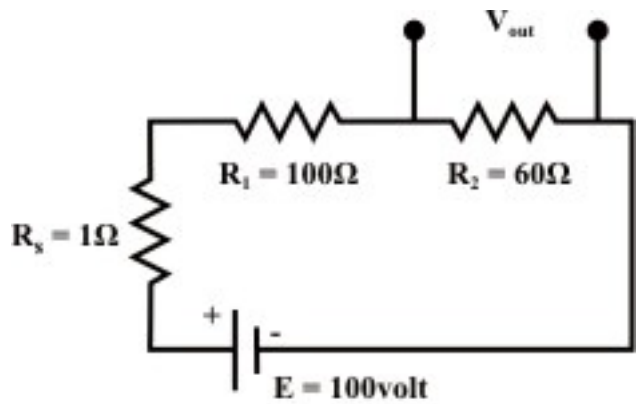

Fig. 3.9

Solution: Part (i): From equation (3.1) the output voltage V_{out} across the resistor $R_2 = \frac{E}{R_1 + R_2} R_2 = \frac{100}{100+60} \times 60 = 37.9\,volt$ (when the internal resistance R_s of the source is considered zero.) Similarly, $V_{out} = 37.27\ volt$ when R_s is taken into account for calculation. Percentage error is computed as = $\frac{37.9 - 37.27}{37.27} \times 100 = 1.69\%$

L-3.5.2 Current divider

Another frequently encountered in electric circuit is the current divider. Figure 3.10 shows that the current divider divides the source current I_s between the two resistors.

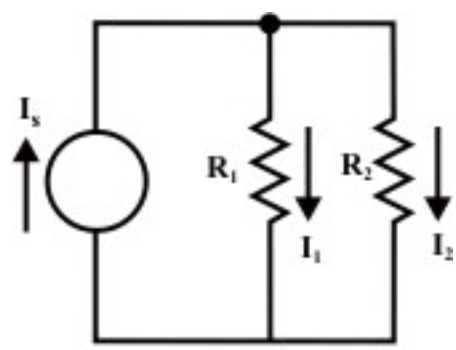

Fig. 3.10: Current Divider

The parallel combination of two resistors is sometimes termed as current divider, because the supply current is distributed between the two branches of the circuit. For the circuit, assume that the voltage across the branch is V and the current expression in R_1 resistor can be written as

$$\frac{I_1}{I_s} = \frac{\frac{V}{R_1}}{V\left(\frac{1}{R_1}+\frac{1}{R_2}\right)} = \frac{R_2}{R_1+R_2} \; or \; I_1 = \frac{R_2}{R_1+R_2}\times I_s$$. Similarly, the current flowing through the R_2 can be obtained as $I_2 = \frac{R_1}{R_1+R_2}\times I_s$. It can be noted that the expression for I_1 has R_2 on its top line, that for I_2 has R_1 on its top line.

Example: L-3.3 Determine $I_1, I_2, I_3 \& I_5$ using only current divider formula when $I_4 = 4$A.

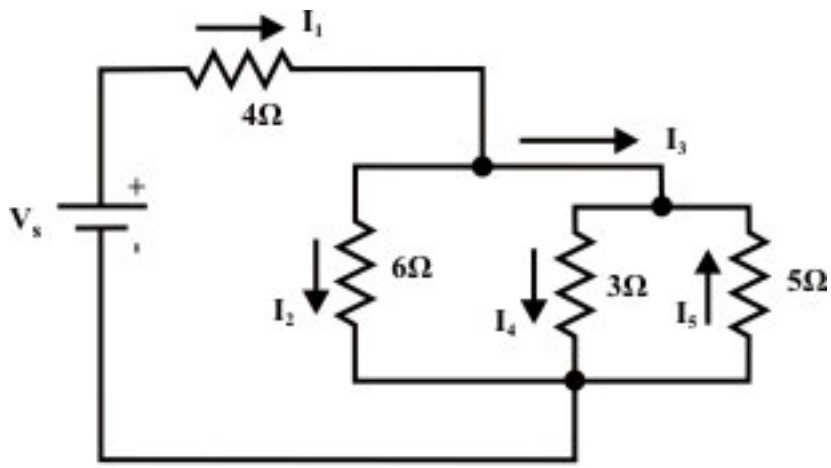

Fig. 3.11

Solution- Using the current division formula we can write $I_4 = \frac{5}{5+3}I_3 = \frac{5}{8}I_3 \rightarrow I_3 = \frac{4\times 8}{5} = 6.4\,A$. Similarly, $-I_5 = \frac{3}{8}\times I_3 \rightarrow I_5 = \frac{3}{8}\times 6.4 = 2.4\,A$.

Furthermore, we can write $I_3 = \frac{6}{6+(3\|5)}I_1 = \frac{6}{6+1.879}I_1 \rightarrow I_1 = \frac{7.879}{6}\times 6.4 = 8.404\,A$ and

$I_2 = \frac{1.879}{6+1.879}\times I_1 = 2.004\,A.$

L-3.6 Potentiometer and its function

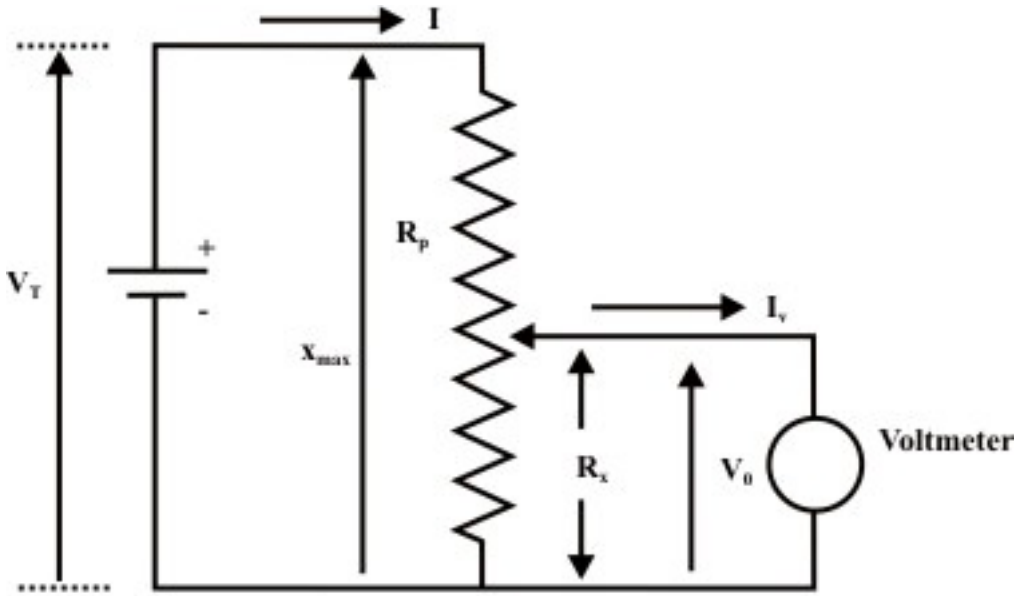

Fig. 3.12: A voltmeter is connected across the output terminals of potentiometer

The potentiometer has a resistance R_p and its wiper can move from top position $x = x_{\max}$ to bottom position $x = 0$. The resistance R_x corresponds to the position x of the wiper such that

$\frac{R_x}{x} = \frac{R_p}{x_{\max}} \Rightarrow R_x = \left(\frac{R_p}{x_{\max}}\right) x$ (assumed that the per unit length resistance of the potentiometer is same through out its length). Figure 3.12 represents a potentiometer whose output is connected to a voltmeter. In true sense, the measurement of the output voltage V_o with a voltmeter is affected by the voltmeter resistance R_V and the relationship between V_O and x (x = wiper distance from the bottom position) can easily be established. We know that the voltmeter resistance is very high in $M\Omega$ range and practically negligible current is flowing through the voltmeter. Under this condition, one can write the expression for voltage between the wiper and the bottom end terminal of the potentiometer as

$$V_{out}(= I R_x) = \frac{V_T (= I R_p)}{x_{\max}} \times x \Rightarrow V_{out} = V_T \times \frac{x}{x_{\max}} = V_{out} = V_T \times \frac{R_x}{R_p}$$

It may be noted that depending on the position of movable tap terminal the output voltage (V_{out}) can be controlled. By adjusting the wiper toward the top terminal, we can increase V_{out}. The opposite effect can be observed while the movable tap moves toward the bottom terminal. A simple application of potentiometer in real practice is the volume control of a radio receiver by adjusting the applied voltage to the input of audio amplifier

of a radio set. This audio amplifier boosts this voltage by a certain fixed factor and this voltage is capable of driving the loudspeaker.

Example- L-3.4 A $500-k\Omega$ potentiometer has 110 V applied across it. Adjust the position of R_{bot} such that 47.5 V appears between the movable tap and the bottom end terminal (refer fig.3.12).

Solution- Since the output voltage (V_{bot}) is not connected to any load, in turn, we can write the following expression

$$V_{out} = V_T \times \frac{x}{x_{\max}} \quad \frac{V_{bot}}{V_T} = \frac{R_{bot}}{R_T} \rightarrow R_{bot} = \frac{V_{bot}}{V_T} \times R_T = \frac{47.5}{110} \times 500000 = 216 - k\Omega.$$

L-3.7 Practical Voltage and Current Sources

L-3.7.1 Ideal and Practical Voltage Sources

- An ideal voltage source, which is represented by a model in fig.3.13, is a device that produces a constant voltage across its terminals ($V = E$) no matter what current is drawn from it (terminal voltage is independent of load (resistance) connected across the terminals)

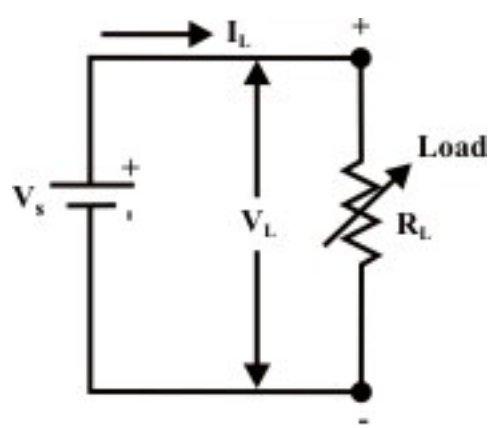

Fig. 3.13: Ideal dc voltage source

For the circuit shown in fig.3.13, the upper terminal of load is marked plus (+) and its lower terminal is marked minus (-). This indicates that electrical potential of upper terminal is V_L volts higher than that of lower terminal. The current flowing through the load R_L is given by the expression $V_s = V_L = I_L R_L$ and we can represent the terminal $V-I$ characteristic of an ideal dc voltage as a straight line parallel to the x-axis. This means that the terminal voltage V_L remains constant and equal to the source voltage V_s irrespective of load current is small or large. The $V-I$ characteristic of ideal voltage source is presented in Figure 3.14.

- However, real or practical dc voltage sources do not exhibit such characteristics (see fig. 3.14) in practice. We observed that as the load resistance R_L connected across the source is decreased, the corresponding load current I_L increases while the terminal voltage across the source decreases (see eq.3.1). We can realize such voltage drop across the terminals with increase in load current provided a resistance element (R_s) present inside the voltage source. Fig. 3.15 shows the model of practical or real voltage source of value V_s.

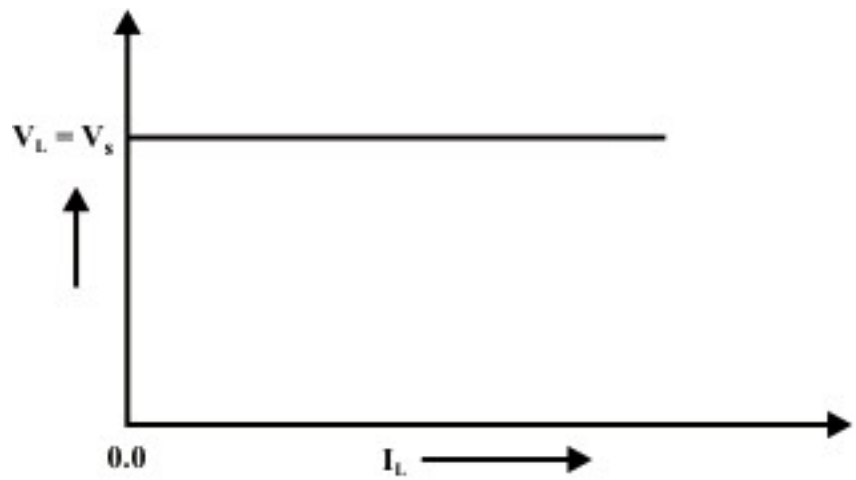

Fig. 3.14: V-I characteristics of ideal voltage source

The terminal $V-I$ characteristics of the practical voltage source can be described by an equation

$$V_L = V_s - I_L R_s \tag{3.1}$$

and this equation is represented graphically as shown in fig.3.16. In practice, when a load resistance R_L more than 100 times larger than the source resistance R_s, the source can be considered approximately ideal voltage source. In other words, the internal resistance of the source can be omitted. This statement can be verified using the relation $R_L = 100R_s$ in equation (3.1). The practical voltage source is characterized by two parameters namely known as (i) Open circuit voltage (V_s) (ii) Internal resistance in the source's circuit model. In many practical situations, it is quite important to determine the source parameters experimentally. We shall discuss briefly a method in order to obtain source parameters.

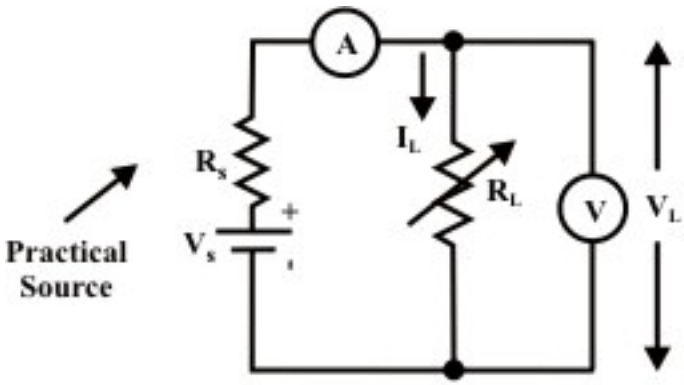

Fig. 3.15: Practical dc voltage source model

Method-: Connect a variable load resistance across the source terminals (see fig. 3.15). A voltmeter is connected across the load and an ammeter is connected in series with the load resistance. Voltmeter and Ammeter readings for several choices of load resistances are presented on the graph paper (see fig. 3.16). The slope of the line is $-R_s$, while the curve intercepts with voltage axis (at $I_L = 0$) is the value of V_s.

The $V-I$ characteristic of the source is also called the source's **"regulation curve" or "load line"**. The open-circuit voltage is also called the "no-load" voltage, V_{oc}. The maximum allowable load current (rated current) is known as full-load current I_{Fl} and the corresponding source or load terminal voltage is known as "full-load" voltage V_{FL}. We know that the source terminal voltage varies as the load is varied and this is due to internal voltage drop inside the source. The percentage change in source terminal voltage from no-load to full-load current is termed the "voltage regulation" of the source. It is defined as

$$\textit{Voltage regulation } (\%) = \frac{V_{oc} - V_{FL}}{V_{FL}} \times 100$$

For ideal voltage source, there should be no change in terminal voltage from no-load to full-load and this corresponds to "zero voltage regulation". For best possible performance, the voltage source should have the lowest possible regulation and this indicates a smallest possible internal voltage drop and the smallest possible internal resistance.

Example:-L-3.5 A practical voltage source whose short-circuit current is 1.0A and open-circuit voltage is 24 Volts. What is the voltage across, and the value of power dissipated in the load resistance when this source is delivering current 0.25A?

Solution: From fig. 3.10, $I_{sc} = \frac{V_s}{R_s} = 1.0\,A$ (short-circuit test) $V_{oc} = V_s = 24\ volts$ (open-circuit test). Therefore, the value of internal source resistance is obtained as $R_s = \frac{V_s}{I_{sc}} = 24\,\Omega$. Let us assume that the source is delivering current $I_L =$ 0.25A when the

load resistance R_L is connected across the source terminals. Mathematically, we can write the following expression to obtain the load resistance R_L .

$$\frac{24}{24+R_L}=0.25 \rightarrow R_L=72\Omega.$$

Now, the voltage across the load $R_L = I_L R_L = 0.25\times 72 = 18$ *volts.*, and the power consumed by the load is given by $P_L = I_L^2 R_L = 0.0625\times 72 = 4.5$ *watts.*

Example-L-3.6 (Refer fig. 3.15) A certain voltage source has a terminal voltage of 50 V when I= 400 mA; when I rises to its full-load current value 800 mA the output voltage is recorded as 40 V. Calculate (i) Internal resistance of the voltage source (R_s). (ii) No-load voltage (open circuit voltage V_s). (iii) The voltage Regulation.

Solution- From equation (3.1) ($V_L = V_s - I_L R_s$) one can write the following expressions under different loading conditions.
$50 = V_s - 0.4R_s$ & $40 = V_s - 0.8R_s$ $\rightarrow$ solving these equations we get, $V_s = 60V$ & $R_s = 25\Omega$.

$$\textit{Voltage regulation } (\%) = \frac{V_{oc}-V_{FL}}{V_{FL}}\times 100 = \frac{60-40}{60}\times 100 = 33.33\%$$

L-3.7.2 Ideal and Practical Current Sources

- Another two-terminal element of common use in circuit modeling is `current source` as depicted in fig.3.17. An ideal current source, which is represented by a model in fig. 3.17(a), is a device that delivers a constant current to any load resistance connected across it, no matter what the terminal voltage is developed across the load (i.e., independent of the voltage across its terminals across the terminals).

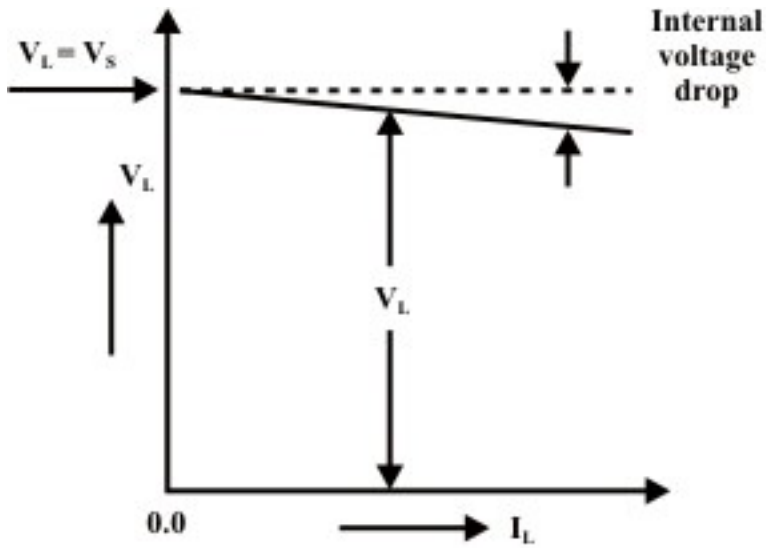

Fig. 3.16: V-I characteristics of practical voltage source

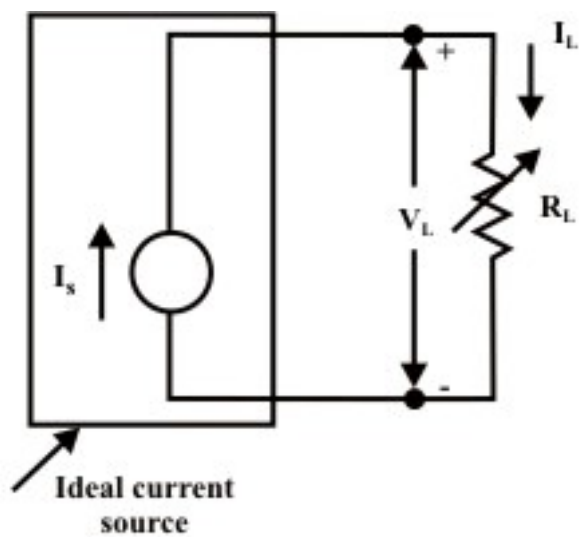

Fig. 3.17(a): Ideal current source with variable load

It can be noted from model of the current source that the current flowing from the source to the load is always constant for any load resistance (see fig. 3.19(a)) i.e. whether R_L is small (V_L is small) or R_L is large (V_L is large). The vertical dashed line in fig. 3.18 represents the $V-I$ characteristic of ideal current source. In practice, when a load R_L is connected across a practical current source, one can observe that the current flowing in load resistance is reduced as the voltage across the current source's terminal is increased, by increasing the load resistance R_L. Since the distribution of source current in two parallel paths entirely depends on the value of external resistance that connected across the source (current source) terminals. This fact can be realized by introducing a parallel resistance R_s in parallel with the practical current source I_s, as shown in fig. 3.17(b). The dark lines in fig. 3.18 show

the $V-I$ characteristic (load-line) of practical current source. The slope of the curve represents the internal resistance of the source. One can apply KCL at the top terminal of the current source in fig. 3.17(b) to obtain the following expression.

$$I_L = I_s - \frac{V_L}{R_s} \; Or \; V_L = I_s R_s - R_s I_L = V_{oc} - R_s I_L \tag{3.2}$$

The open circuit voltage and the short-circuit current of the practical current source are given by $V_{oc} = I_s R_s$ and $I_{short} = I_s$ respectively. It can be noted from the fig.3.18 that source 1 has a larger internal resistance than source 2 and the slope the curve indicates the internal resistance R_s of the current source. Thus, source 1 is closer to the ideal source. More specifically, if the source internal resistance $R_s \geq 100 R_L$ then source acts nearly as an ideal current source.

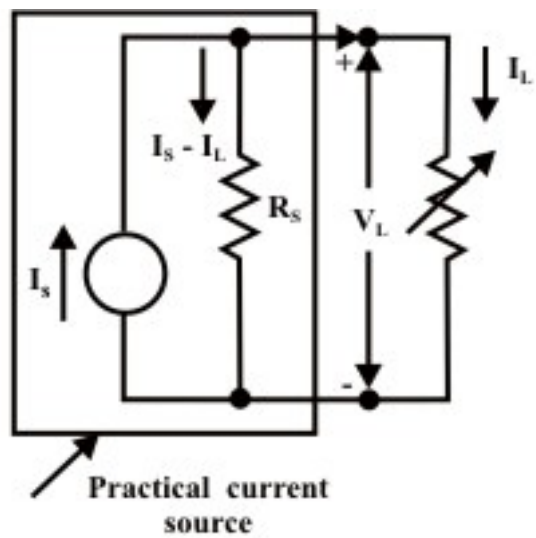

Fig. 3.17(b): Practical current source with variable load

L-3.7.3 Conversion of a Practical Voltage Source to a Practical Current source and vise-versa

- Voltage Source to Current Source

For the practical voltage source in fig. 3.19(a), the load current is calculated as

$$I_L = \frac{V_s}{R_s + R_L} \tag{3.3}$$

Note that the maximum current delivered by the source when $R_L = 0$ (under short-circuit condition) is given by $I_{\max} = I_s = \frac{V_s}{R_s}$. From eq.(3.3) one can rewrite the expression for load current as

$$I_L = \frac{I_s \times R_s}{R_s + R_L} \tag{3.4}$$

A simple current divider circuit having two parallel branches as shown in fig.3.19 (b) can realize by the equation (3.4).

Note: A practical voltage source with a voltage V_s and an internal source resistance R_s can be replaced by an equivalent practical current source with a current $I_s = \frac{V_s}{R_s}$ and a source internal resistance R_s (see fig. 3.19(b)).

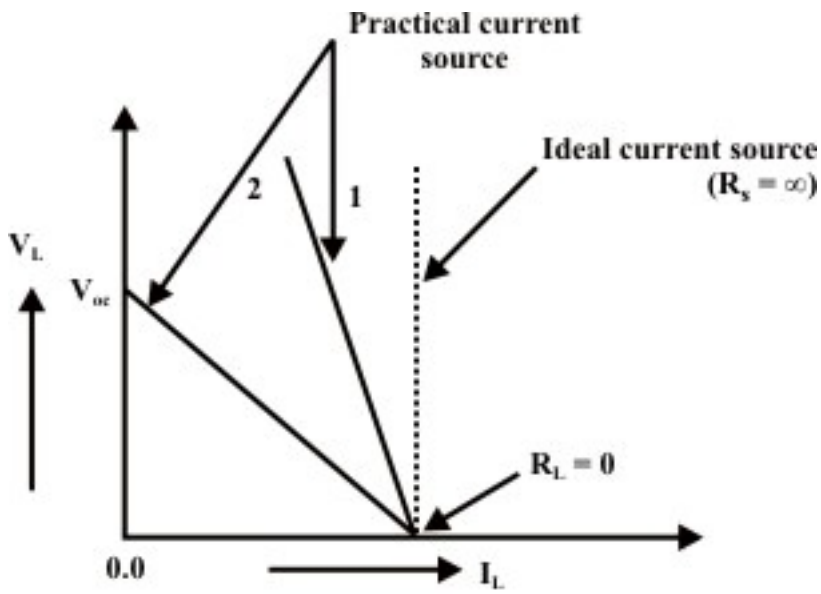

Fig. 3.18: V-I characteristic of practical current source

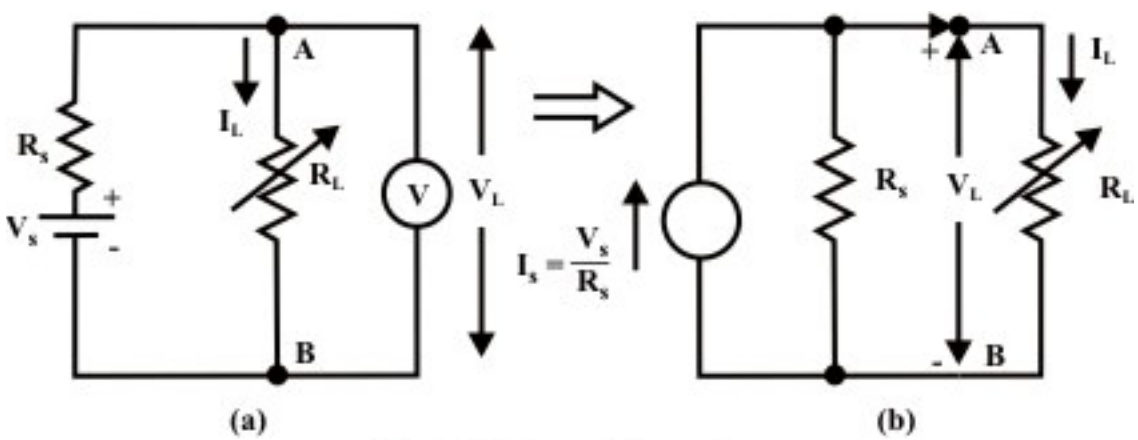

Fig. 3.19: Source Conversions

- Current source to Voltage Source

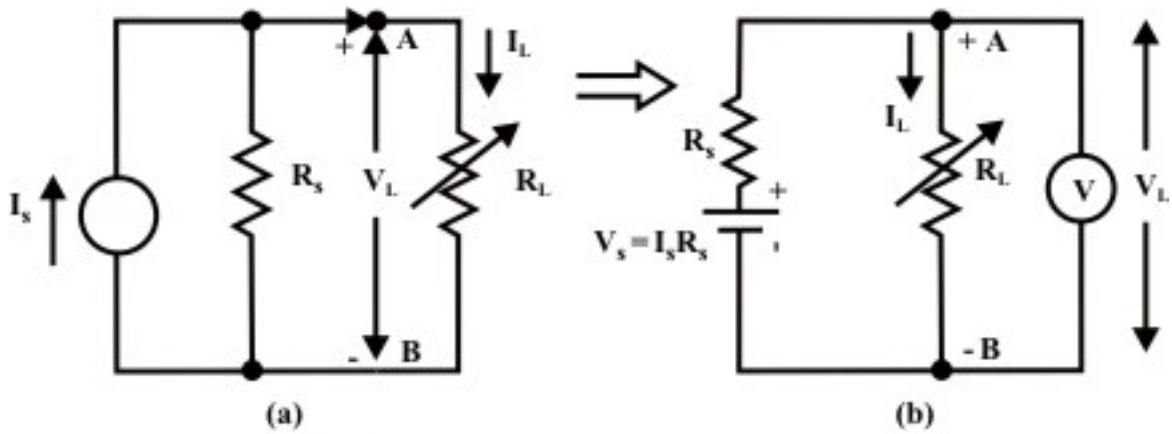

Fig. 3.20: Current Source to Voltage source conversion

For the circuit in fig. 3.15(a), the load voltage V_L is given by

$$V_L = I_L R_L = \left(\frac{R_s}{R_s + R_L} \times I_s \right) R_L = I_s R_s \left(\frac{R_L}{R_s + R_L} \right) = V_s \left(\frac{R_L}{R_s + R_L} \right) \qquad (3.5)$$

Equation (3.5) represents output from the voltage source across a load resistance and this act as a voltage divider circuit. Figure 3.20(b) describes the situation that a voltage source with a voltage value $V_s = I_s R_s$ and an internal source resistance R_s has an equivalent effect on the same load resistor as the current source in figure 3.20(a).

Note: A current source with a magnitude of current I_s and a source internal resistance R_s can be replaced by an equivalent voltage source of magnitude $V_s = I_s R_s$ and an internal source resistance R_s (see fig. 3.20(b)).

Remarks on practical sources: (i) The open circuit voltage that appears at the terminals A & B for two sources (voltage & current) is same (i.e., V_s).

(ii) When the terminals A & B are shorted by an ammeter, the shot-circuit results same in both cases (i.e., I_s).

(iii) If an arbitrary resistor (R_L) is connected across the output terminals A & B of either source, the same power will be dissipated in it.

(iv) The sources are equivalent only as concerns on their behavior at the external terminals.

(v) The internal behavior of both sources is quite different (i.e., when open circuit the voltage source does not dissipate any internal power while the current source dissipates. Reverse situation is observed in short-circuit condition).

L-3.8 Independent and Dependent Sources that encountered in electric circuits

- Independent Sources

So far the voltage and current sources (whether ideal or practical) that have been discussed are known as independent sources and these sources play an important role

to drive the circuit in order to perform a specific job. The internal values of these sources (either voltage source or current source) – that is, the generated voltage V_s or the generated current I_s (see figs. 3.15 & 3.17) are not affected by the load connected across the source terminals or across any other element that exists elsewhere in the circuit or external to the source.

- Dependent Sources

Another class of electrical sources is characterized by dependent source or controlled source. In fact the source voltage or current depends on a voltage across or a current through some other element elsewhere in the circuit. Sources, which exhibit this dependency, are called dependent sources. Both voltage and current types of sources may be dependent, and either may be controlled by a voltage or a current. In general, dependent source is represented by a diamond (◇)-shaped symbol as not to confuse it with an independent source. One can classify dependent voltage and current sources into four types of sources as shown in fig.3.21. These are listed below:

(i) Voltage-controlled voltage source (VCVS) (ii) Current-controlled voltage source (ICVS) (iii) Voltage-controlled current source(VCIS) (iv) Current-controlled current source(ICIS)

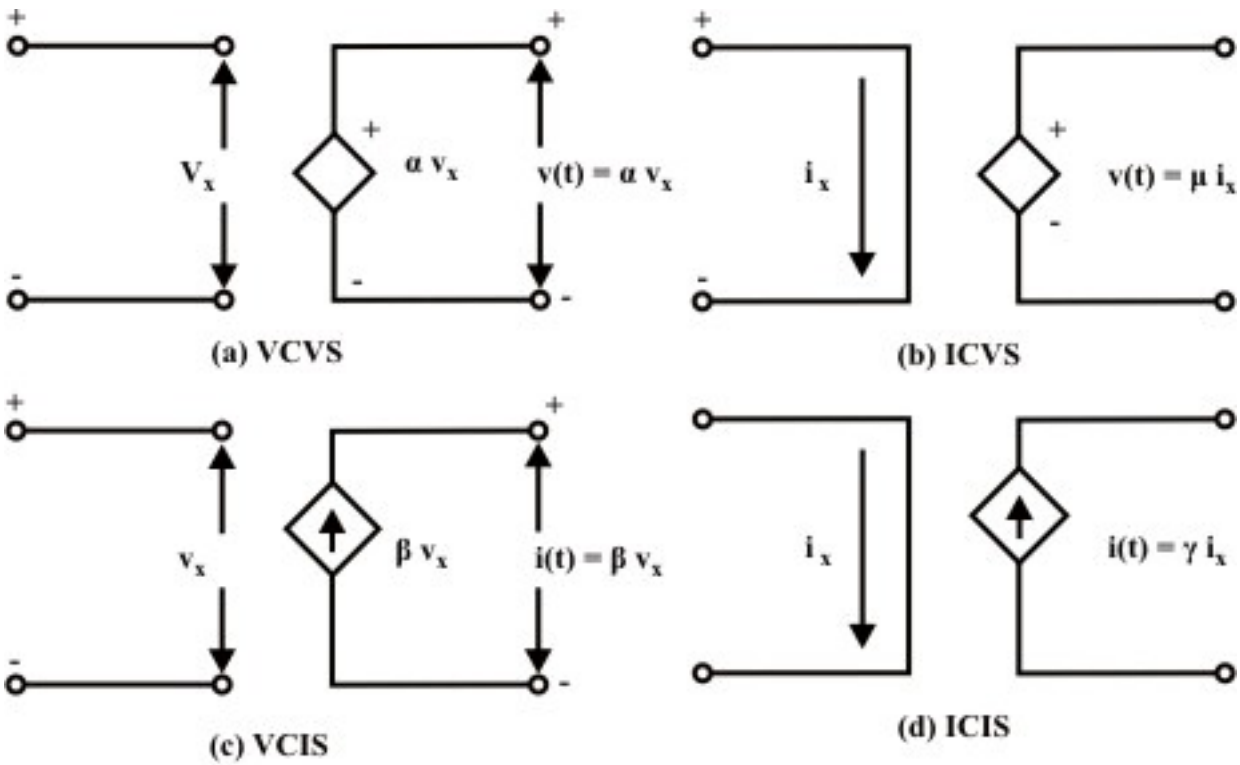

Fig. 3.21: Ideal dependent (controlled) sources

Note: When the value of the source (either voltage or current) is controlled by a voltage (v_x) somewhere else in the circuit, the source is said to be voltage-controlled

source. On the other hand, when the value of the source (either voltage or current) is controlled by a current (i_x) somewhere else in the circuit, the source is said to be current-controlled source. KVL and KCL laws can be applied to networks containing such dependent sources. Source conversions, from dependent voltage source models to dependent current source models, or visa-versa, can be employed as needed to simplify the network. One may come across with the dependent sources in many equivalent-circuit models of electronic devices (transistor, BJT(bipolar junction transistor), FET(field-effect transistor) etc.) and transducers.

L-3.9 Understanding Delivering and Absorbing Power by the Source.

It is essential to differentiate between the absorption of power (or dissipating power) and the generating (or delivering) power. The power absorbed or dissipated by any circuit element when flows in a load element from higher potential point (i.e +ve terminal) toward the lower terminal point (i.e., -ve terminal). This situation is observed when charging a battery or source because the source is absorbing power. On the other hand, when current flows in a source from the lower potential point (i.e., -ve terminal) toward the higher potential point (i.e., +ve terminal), we call that source is generating power or delivering power to the other elements in the electric circuit. In this case, one can note that the battery is acting as a “source” whereas the other element is acting as a “sink”. Fig.3.22 shows mode of current entering in a electric element and it behaves either as source (delivering power) or as a sink (absorbing or dissipating power).

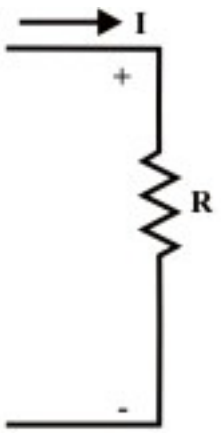

(a) Power absorbed by R

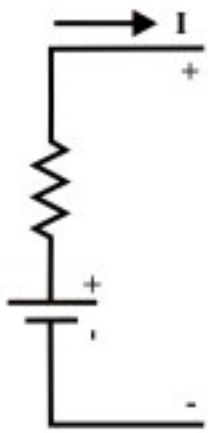

(b) Source generates power

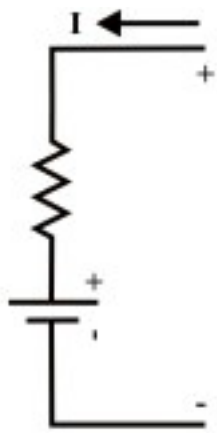

(c) Source absorbs power

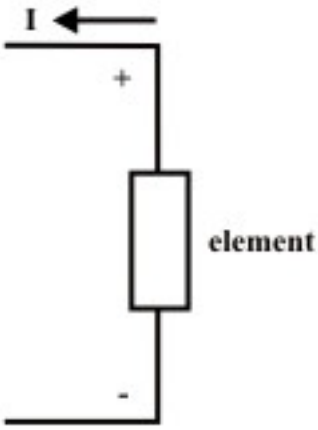

(d) Power generated by this element

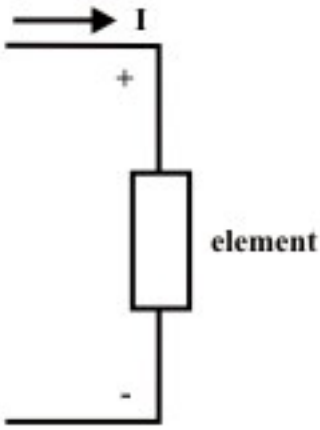

(e) Power absorbed by this element

Fig. 3.22: Source and sink configurations

L.3.10 **Test Your Understanding** [marks distribution shown inside the bracket]

T.1 If a 30 V source can force 1.5 A through a certain linear circuit, how much current can 10 V force through the same circuit? (Ans. 500 $mA.$) [1]

T.2 Find the source voltage V_s in the circuit given below [1]

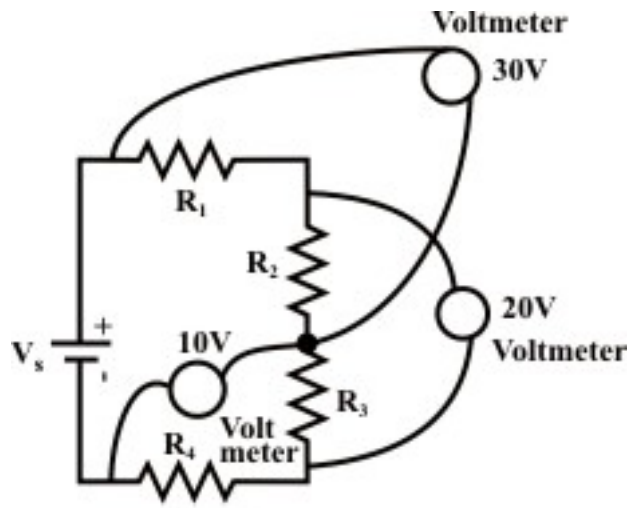

Fig. 3.33

(Ans. 40 V)

T.3 For the circuit shown in Figure T.3 [1x4]

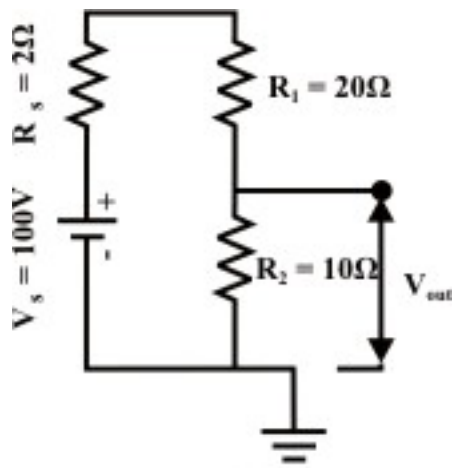

Fig. 3.34

(a) Calculate V_{out}, ignoring the internal resistance of the source R_s (assuming it's zero). Use Voltage division method. (Ans.33.333 V)

(b) Recalculate V_{out}, taking into account R_s. What percentage error was introduced by ignoring R_s in part (a). (Ans. 31.29 V , 6.66%)

(c) Repeat part (a) & (b) with the same source and replacing $R_1 = 20\Omega \; by \; 20k\Omega$ & $R_2 = 10\Omega \; by \; 1k\Omega$. Explain why the percent error is now so much less than in part (b). (Ans. 33.333 V, 33.331 V, 0.006%)

T.4 For the circuit shown in figure T.4 [1x6]

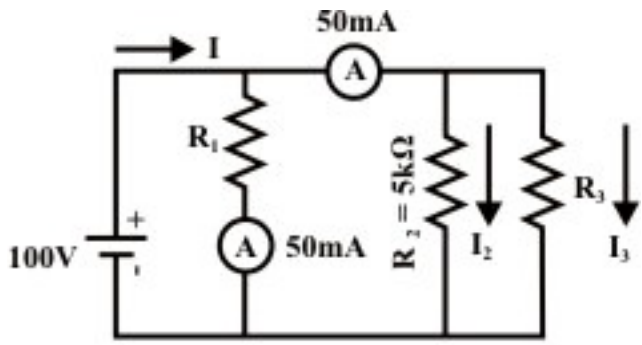

Fig. 3.35

(a) Find , in any order, I_2, I_3, *and* I (b) Find, in any order, R_1, R_3, *and* R_{eq}.
(Ans. (a) 20 mA, 30 mA and 100 mA (b) $2k\Omega$, 3.33 $k\Omega$ and $1k\Omega$.)

T.5 Refer to the circuit shown in Figure T.5 [1x4]

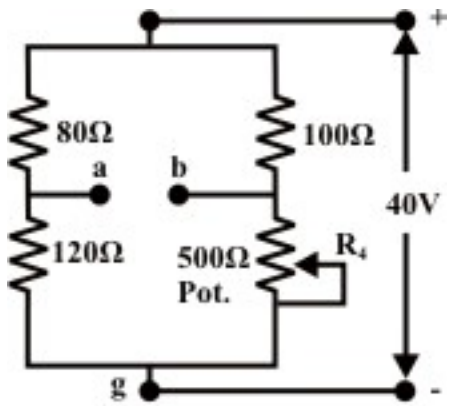

Fig. 3.36

(a) What value of R_4 will balance the bridge (i.e., $V_{ab} = 0.0$) (b) At balanced condition, find the values of V_{ag} & V_{bg}. (Ans. 150Ω, $24V$ (a is higher potential than 'g', since current is flowing from 'a' to 'b'), $24V$ (b is higher potential than 'g')

(b) Does the value of V_{ag} depend on whether or not the bridge is balanced? Explain this. (Ans. No., since flowing through the 80Ω branch will remain same and hence potential drop across the resistor remains same.)

(c) Repeat part (b) for V_{bg}. (Ans. Yes . Suppose the value of R_4 is increased from its balanced condition, this in turn decreases the value of current in that branch and subsequently voltage drop across the 100Ω is also decreases. The indicates that the voltage across V_{bg} will increase to satisfy the KVL.)

(d) If the source voltage is changed to 50 V will the answer to part (a) change? Explain this. (Ans. No.)

T.6 If an ideal voltage source and an ideal current source are connected in parallel, then the combination has exactly the same properties as a voltage source alone. Justify this statement. [1]

T.7 If an ideal voltage source and an ideal current source are connected in series, the combination has exactly the same properties as a current source alone. Justify this statement. [1]

T.8 When ideal arbitrary voltage sources are connected in parallel, this connection violates KVL. Justify. [1]

T.9 When ideal arbitrary current sources are connected in series, this connection violates KCL. Justify.
[1]

T.10 Consider the nonseries-parallel circuit shown in figure T.10. Determine R and the equivalent resistance R_{eq} between the terminals "a" & "b" when $v_1 = 8V$.

(Appling basic two Kirchhoff's laws) (Ans. $R = 4\Omega$ & $R_{eq} = 4\Omega$) [3]

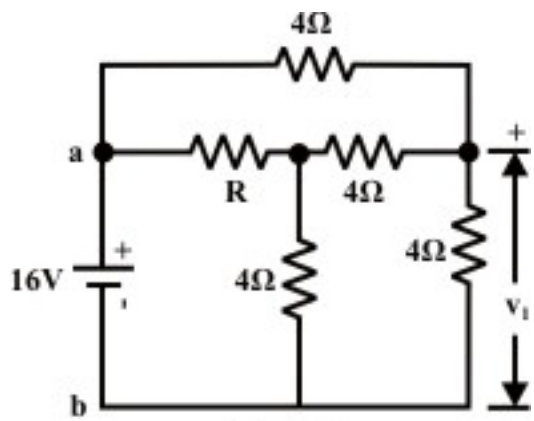

Fig. 3.37

T.11 A 20 V voltage source is connected in series with the two series-resistors $R_1 = 5\Omega$ & $R_2 = 10\Omega$. (a) Find I, V_{R1}, V_{R2}. (Ans. 1.333 A, 6.6667 V, 13.33 V)

(b) Find the power absorbed or generated by each of the three elements. (8.88 W (absorbed), 17.76 W (absorbed), 26.66 W delivered or generated (since current is leaving the plus terminal of that source.) [2]

T.12 Consider the circuit of figure T.12

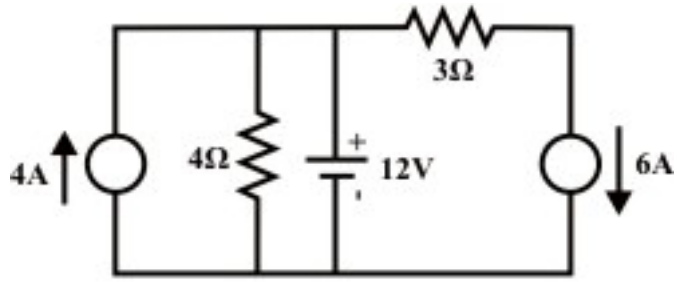

Fig. 3.38

Find powers involved in each of the five elements and whether absorbed or generated. (Ans. 48 W (G), 36 W (A), 60 W (G), 108 W (A) and 36 W (G). (results correspond to elements from left to right, CS, R, VS, R, CS). [4]

T.13 For the circuit of Figure T.13 Suppose $V_{in} = 20V$.

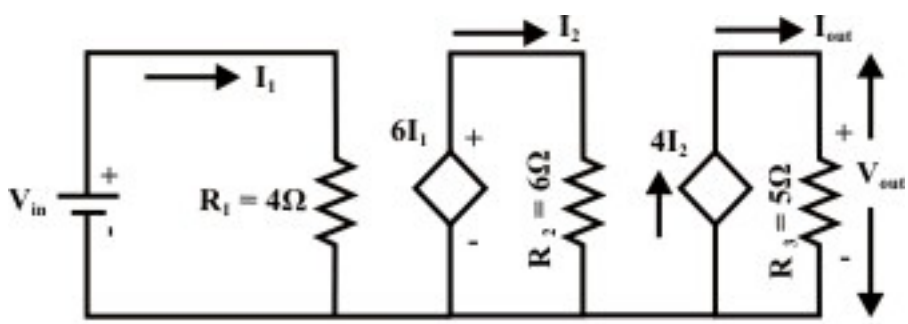

Fig. 3.39

(a) Find the output voltage and output current. [2]

(b) Find the ratio of output voltage (V_{out}) to input voltage (V_{in}) i.e. $\frac{V_{out}}{V_{in}}$ = voltage gain. [1]

(c) Find the power delivered by each source(dependent & independent sources).[2]

(Ans. (a) 100 V, 20 A (note that $6I_1$ is the value of dependent voltage source with the polarity as shown in fig. T.13 whereas $4I_2$ represents the value of dependent current source) (b) 5 (voltage gain). (c) 100 W (VS), 150 W (DVS), 2000 W (DCS)).

T.14 Find the choice of the resistance R_2 (refer to Fig. T.13) so that the voltage gain is 30. (Ans. $R_2 = 1\Omega$ [1]

T.15 Find equivalent resistance between the terminals 'a' & 'b' and assume all resistors values are 1Ω. [2]

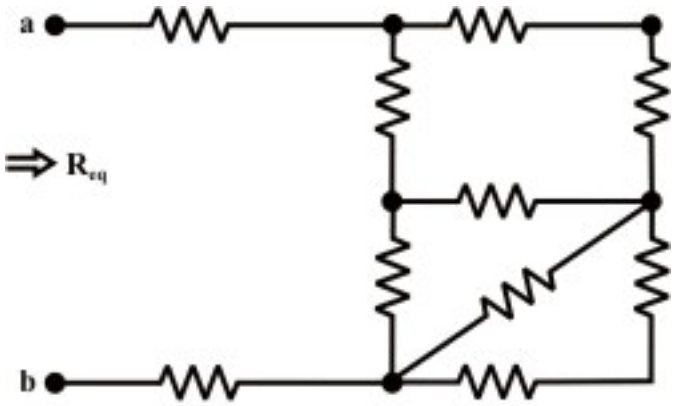

Fig. 3.40

Module 2

DC Circuit

Lesson 4

Loop Analysis of resistive circuit in the context of dc voltages and currents

Objectives

- Meaning of circuit analysis; distinguish between the terms mesh and loop.
- To provide more general and powerful circuit analysis tool based on Kirchhoff's voltage law (KVL) only.

L.4.1 Introduction

The Series-parallel reduction technique that we learned in lesson-3 for analyzing DC circuits simplifies every step logically from the preceding step and leads on logically to the next step. Unfortunately, if the circuit is complicated, this method (the simplify and reconstruct) becomes mathematically laborious, time consuming and likely to produce mistake in calculations. In fact, to elevate these difficulties, some methods are available which do not require much thought at all and we need only to follow a well-defined faithful procedure. One most popular technique will be discussed in this lesson is known as 'mesh or loop' analysis method that based on the fundamental principles of circuits laws, namely, Ohm's law and Kirchhoff's voltage law. Some simple circuit problems will be analyzed by hand calculation to understand the procedure that involve in mesh or loop current analysis.

L.4.1.1 Meaning of circuit analysis

The method by which one can determine a variable (either a voltage or a current) of a circuit is called analysis. Basic difference between 'mesh' and 'loop' is discussed in lesson-3 with an example. A 'mesh' is any closed path in a given circuit that does not have any element (or branch) inside it. A mesh has the properties that (i) every node in the closed path is exactly formed with two branches (ii) no other branches are enclosed by the closed path. Meshes can be thought of a resembling window partitions. On the other hand, 'loop' is also a closed path but inside the closed path there may be one or more than one branches or elements.

L.4.2 Solution of Electric Circuit Based on Mesh (Loop) Current Method

Let us consider a simple dc network as shown in Figure 4.1 to find the currents through different branches using Mesh (Loop) current method.

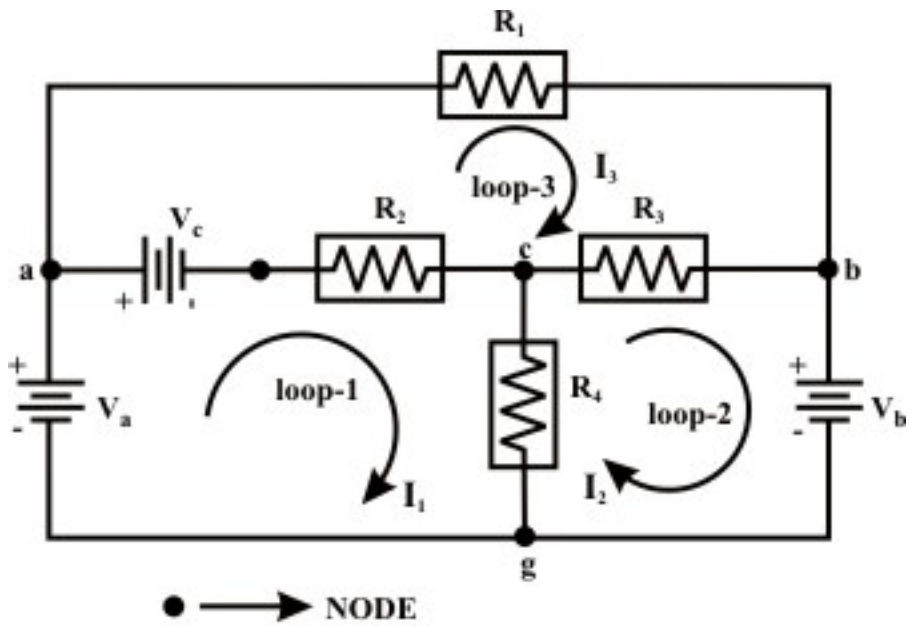

Figure 4.1

Applying KVL around mesh (loop)-1:(note in mesh-1, I_1 is known as local current and other mesh currents $I_2 \& I_3$ are known as foreign currents.)

$$V_a - V_c - (I_1 - I_3)R_2 - (I_1 - I_2)R_4 = 0$$

$$V_a - V_c = (R_2 + R_4)I_1 - R_4 I_2 - R_2 I_3 = R_{11}I_1 - R_{12}I_2 - R_{13}I_3 \quad (4.1)$$

Applying KVL around mesh (loop)-2:(similarly in mesh-2, I_2 is local current and $I_1 \& I_3$ are known as foreign currents)

$$-V_b - (I_2 - I_3)R_3 - (I_2 - I_1)R_4 = 0$$

$$-V_b = -R_4 I_1 + (R_3 + R_4)I_2 - R_3 I_3 = -R_{21}I_1 + R_{22}I_2 - R_{23}I_3 \quad (4.2)$$

Applying KVL around mesh (loop)-3:

$$V_c - I_3 R_1 - (I_3 - I_2)R_3 - (I_3 - I_1)R_2 = 0$$

$$V_c = -R_2 I_1 - R_3 I_2 + (R_1 + R_2 + R_3)I_3 = -R_{31}I_1 - R_{32}I_2 + R_{33}I_3 \quad (4.3)$$

** In general, we can write for i^{th} mesh (for $i = 1, 2, ...N$)

$$\sum V_{ii} = -R_{i1}I_1 - R_{i2}I_2 ..... + R_{ii}I_i - R_{i,i+1}I_{i+1} - .... R_{iN}\, I_N$$

$\sum V_{ii} \rightarrow$ simply means to take the algebraic sum of all voltage sources around the ith mesh.

$R_{ii} \rightarrow$ means the total self resistance around the ith mesh.

$R_{ij} \rightarrow$ means the mutual resistance between the and j^{th} meshes.

Note: Generally, $R_{ij} = R_{ji}$ (true only for linear bilateral circuits)

$I_i \rightarrow$ the unknown mesh currents for the network.

Summarize:

Step-I: Draw the circuit on a flat surface with no conductor crossovers.

Step-2: Label the mesh currents (I_i) carefully in a clockwise direction.

Step-3: Write the mesh equations by inspecting the circuit (No. of independent mesh (loop) equations=no. of branches (b) - no. of principle nodes (n) + 1).

Note:

To analysis, a resistive network containing voltage and current sources using 'mesh' equations method the following steps are essential to note:

- If possible, convert current source to voltage source.
- Otherwise, define **the voltage** across the current source and write the mesh equations as if these source voltages were known. Augment the set of equations with one equation for each current source expressing a known mesh current or difference between two mesh currents.
- Mesh analysis is valid only for circuits that can be drawn in a two-dimensional plane in such a way that no element crosses over another.

Example-L-4.1: Find the **current** through 'ab-branch' (I_{ab}) and **voltage (** V_{cg} **)** across the current source using Mesh-current method.

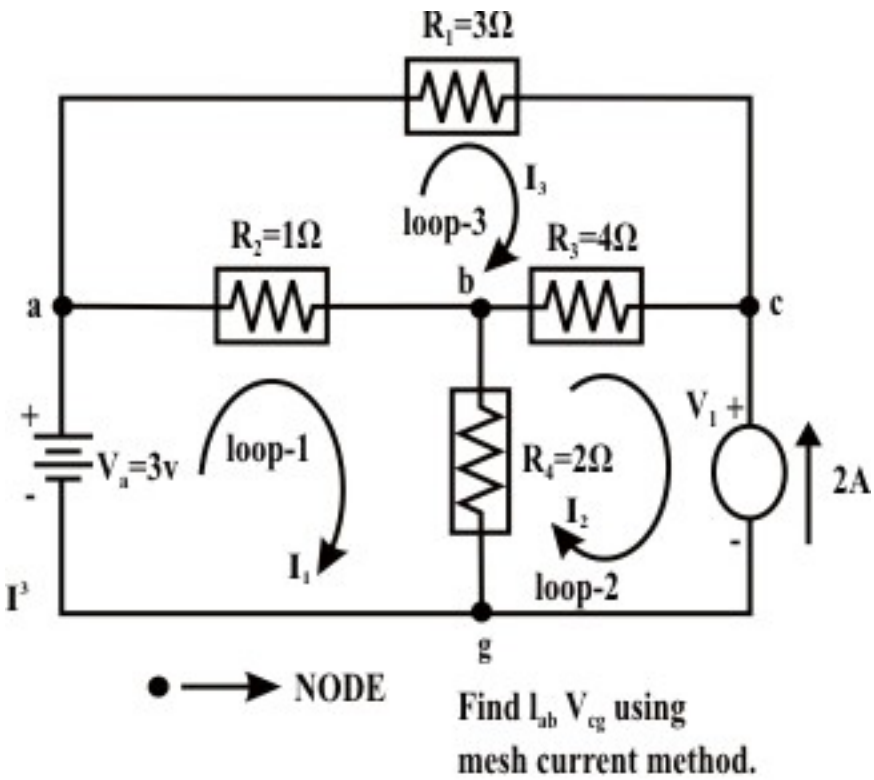

Figure 4.2

Solution: Assume voltage across the current source is v_1 ('c' is higher potential than 'g' (ground potential and assumed as zero potential) and note $I_2 = -2A$ (since assigned current direction (I_2) is opposite to the source current)

Loop - 1: (Appling KVL)

$$V_a - (I_1 - I_3)R_2 - (I_1 - I_2)R_4 = 0 \Rightarrow 3 = 3I_1 - 2I_2 - I_3$$

$$3I_1 - I_3 = -1 \qquad (4.4)$$

Loop - 2: (Appling KVL)

Let us assume the voltage across the current source is v_1 and its top end is assigned with a positive sign.

$$-v_1 - (I_2 - I_1)R_4 - (I_2 - I_3)R_3 = 0 \;\Rightarrow\; -v_1 = -2I_1 + 6I_2 - 4I_3$$

$$2I_1 + 12 + 4I_3 = v_1 \qquad (\text{note: } I_2 = -2A\ ) \qquad (4.5)$$

Loop - 3: (Appling KVL)

$$-I_3 R_1 - (I_3 - I_2)R_3 - (I_3 - I_1)R_2 = 0 \Rightarrow -I_1 - 4I_2 + 8I_3 = 0$$

$$I_1 - 8I_3 = 8 \qquad (\text{Note, } I_2 = -2A) \qquad (4.6)$$

Solving equations (4.4) and (4.6), we get $I_1 = -\frac{48}{69} = -0.6956A$ and

$I_3 = -\frac{25}{23} = -1.0869A$, $I_{ab} = I_1 - I_3 = 0.39A$, $I_{bc} = I_2 - I_3 = -0.913A$ and

$I_{bg} = I_1 - I_2 = 1.304A$

- ve sign of current means that the current flows in reverse direction (in our case, the current flows through 4Ω resistor from 'c' to 'b' point). From equation (4.5), one can get v_1 *== 6.27 volt.*

Another way: $-v_1 + v_{bg} + v_{bc} = 0 \Rightarrow v_1 = v_{cg} = 6.27\,volt.$

Example-L-4.2 For the circuit shown Figure 4.3 (a) find V_x using the mesh current method.

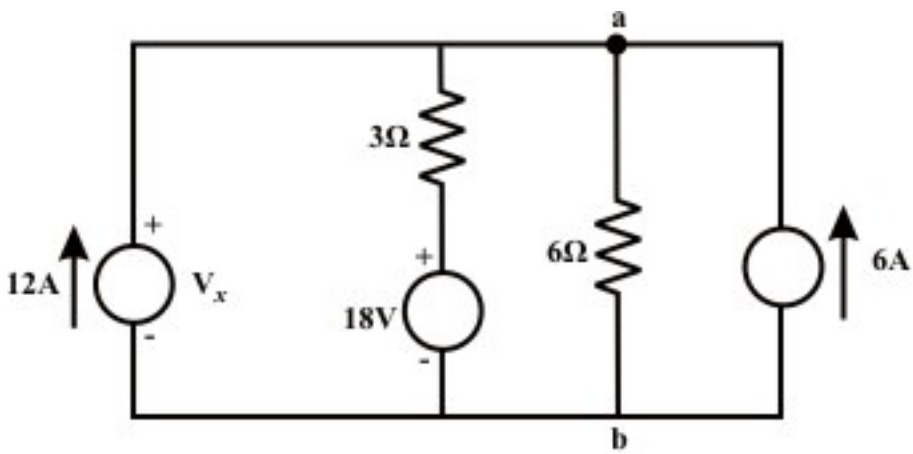

Fig. 4.3(a)

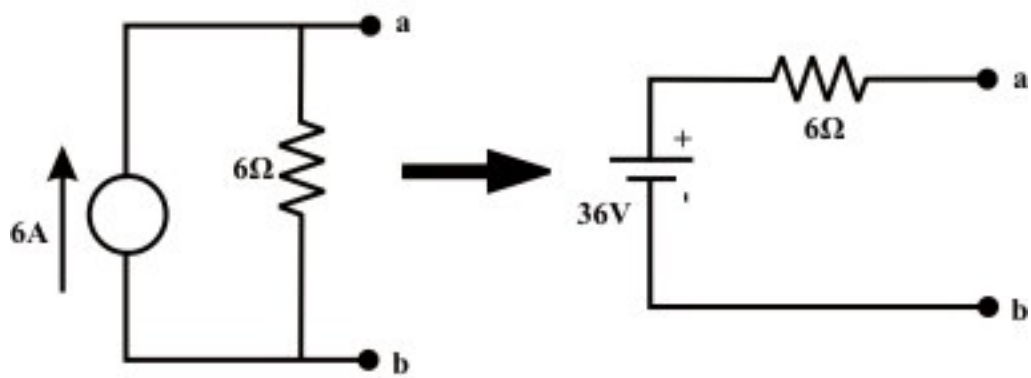

Fig. 4.3(b)

Solution: One can easily convert the extreme right current source (6 A) into a voltage source. Note that the current source magnitude is 6 A and its internal resistance is 6Ω. The given circuit is redrawn and shown in Figure 4.3 (c)

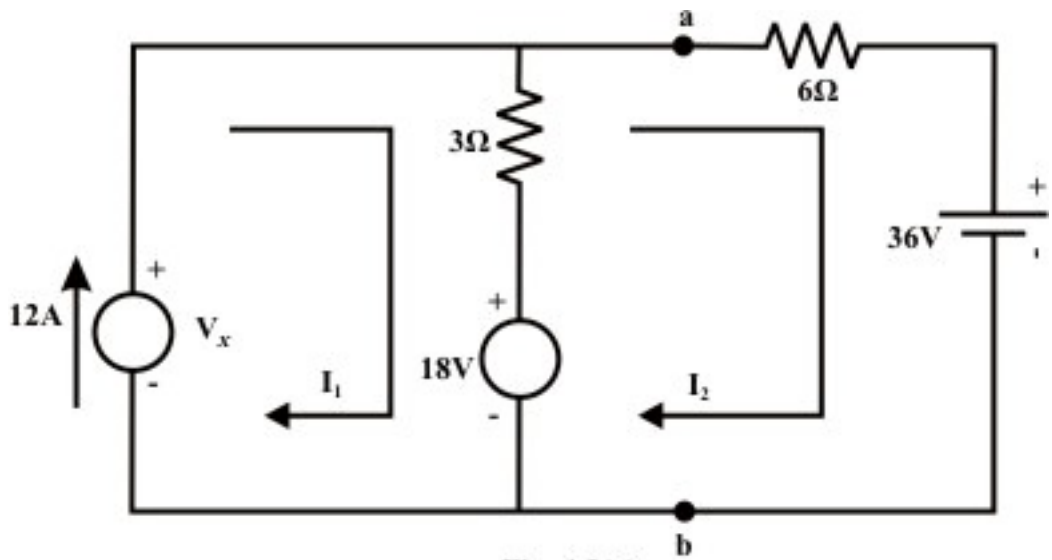

Fig. 4.3(c)

Loop-1: (Write KVL, note $I_1 = 12\,A$)

$$V_x - (I_1 - I_2)\times 3 - 18 = 0 \Rightarrow V_x + 3I_2 = 54 \qquad (4.7)$$

Loop-2: (write KVL)

$$18 - (I_2 - I_1)\times 3 - I_2 \times 6 - 36 = 0 \Rightarrow 9I_2 = 18 \Rightarrow I_2 = 2\,A$$

Using the value of $I_2 = 2\,A$ in equation (4.7), we get $V_x = 48\,volt$.

Example-L-4.3 Find v_R for the circuit shown in figure 4.4 using 'mesh current method. Calculate the power absorbed or delivered by the sources and all the elements.

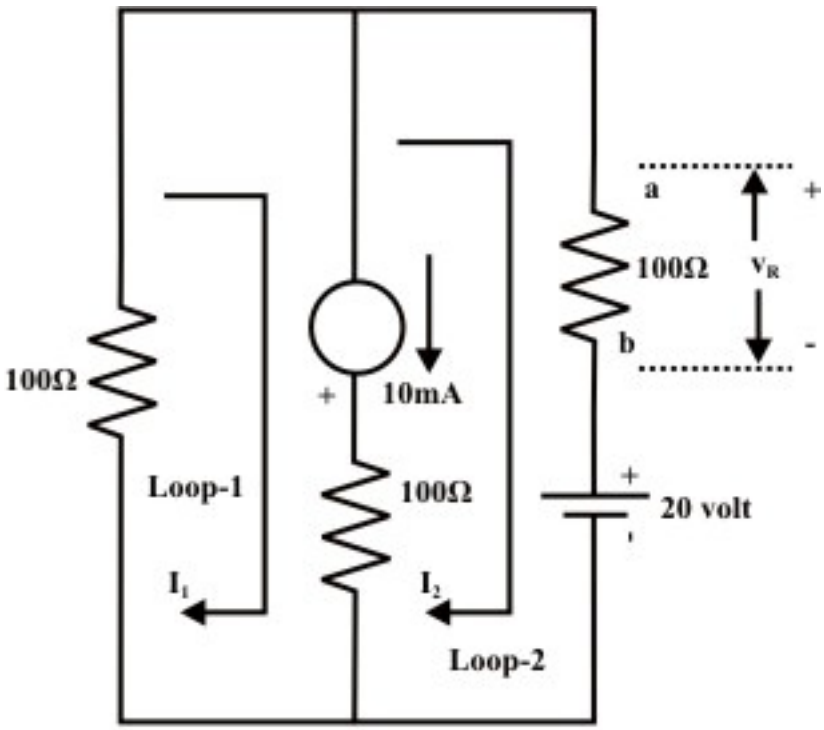

Figure 4.4

Solution: Assume the voltage across the current source is 'v' and the bottom end of current source is marked as positive sign.

For loop No. 1: (KVL equation)

$$v-(I_1-I_2)\times 100-I_1\times 100=0 \;\Rightarrow\; v-200\,I_1+100\,I_2=0 \tag{4.8}$$

It may be noted that from the figure that the current flowing through the $100\,\Omega$ resistor (in the middle branch) is $10\,mA$. More specifically, one can write the following expression

$$I_1-I_2=10\times 10^{-3} \tag{4.9}$$

For loop No. 2: (KVL equation)

$$-20-(I_2-I_1)\times 100-v-I_2\times 100=0 \Rightarrow v+200\,I_2-100\,I_1=-20 \tag{4.10}$$

Solving equations (4.8)–(4.10), one can obtained the loop currents as $I_1=-0.095\;=-95\,mA$ (-ve sign indicates that the assigned loop current direction is not correct or in other words loop current (I_1) direction is anticlockwise.) and $I_2=-0.105=-105\,mA$ (note, loop current (I_2) direction is anticlockwise). Now the voltage across the $100\,\Omega$ resistor (extreme right branch) is given by $v_R=I_2\times 100=-0.105\times 100=-10.5\,volt$. .This indicates that the resistor terminal (b) adjacent to the voltage source is more positive than the other end of the resistor terminal

(a). From equation (4.8) $v = -8.5\,volt$ and this implies that the 'top' end of the current source is more positive than the bottom 'end'.

Power delivered by the voltage source = $20 \times 0.105 = 2.1W$ (note that the current is leaving the positive terminal of the voltage source). On the other hand, the power received or absorbed by the current source = $8.5 \times 0.01 = 0.085W$ (since current entering to the positive terminal (top terminal) of the current source). Power absorbed by the all resistance is given

$= (0.105)^2 \times 100 + (0.095)^2 \times 100 + (10 \times 10^{-3})^2 \times 100 = 2.015W$.

Further one can note that the power delivered ($P_d = 2.1W$) = power absorbed ($P_{ab} = 0.085 + 2.015 = 2.1W$) $= 2.1W$

L.4.3 Test Your Understanding [Marks:50]

T.4.1 To write the Kirchhoff's voltage law equation for a loop, we proceed clockwise around the loop, considering voltage rises into the loop equation as ------- terms and voltage drops as -------- terms. [2]

T.4.2 When writing the Kirchhoff's voltage law equation for a loop, how do we handle the situation when an ideal current source is present around the loop? [2]

T.4.3 When a loop current emerges with a positive value from mathematical solution of the system of equations, what does it mean? What does it mean when a loop current emerges with a negative value? [2]

T.4.4 In mesh current method, the current flowing through a resistor can be computed with the knowledge of ------ loop current and ---------- loop current. [2]

T.4.5 Find the current through 6Ω resistor for the circuit Figure 4.5 using 'mesh current' method and hence calculate the voltage across the current source. [10]

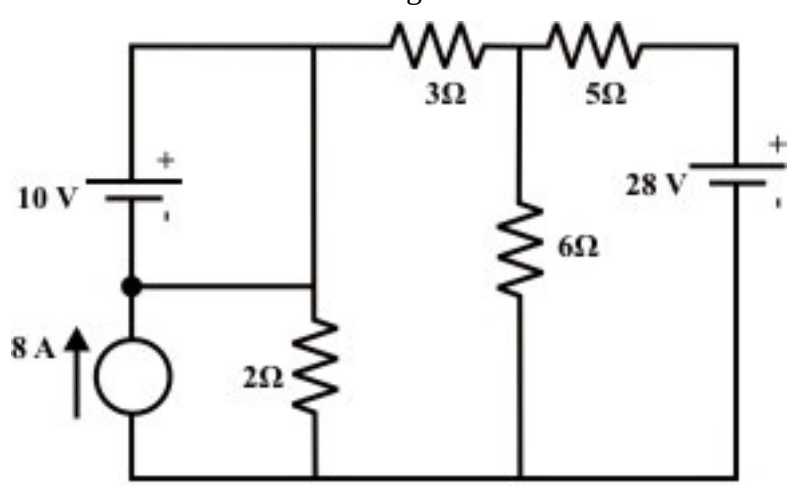

Figure 4.5

(Answer: $3.18\,A$; $13.22\,V$)

T.4.6 For the circuit shown in Figure 4.6, find the current through I_{AB} , I_{AC} , I_{CD} *and* I_{EF} using 'mesh current' method. [12]

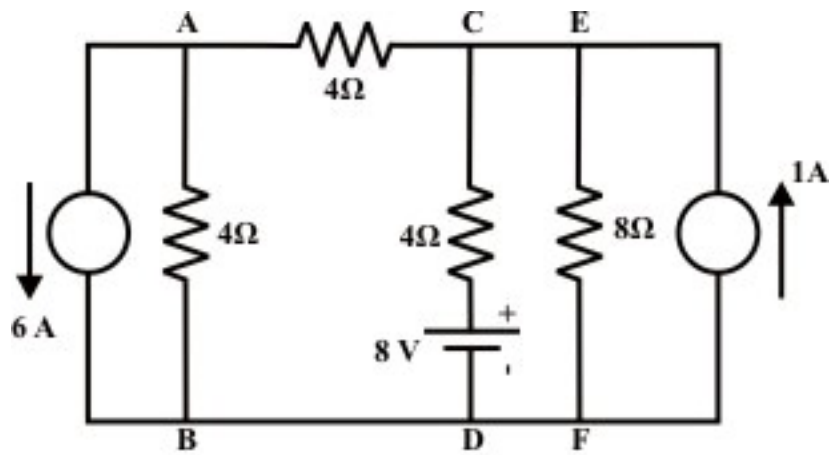

Figure 4.6

(Answer: $I_{AB} = -3\,A; I_{AC} = -3\,A; I_{CD} = -2\,A$ *and* $I_{EF} = 0\,A.$)

T.4.7 Find the current flowing through the $R_L = 1k\Omega$ resistor for the circuit shown in Figure 4.7 using 'mesh current' method. What is the power delivered or absorbed by the independent current source? [10]

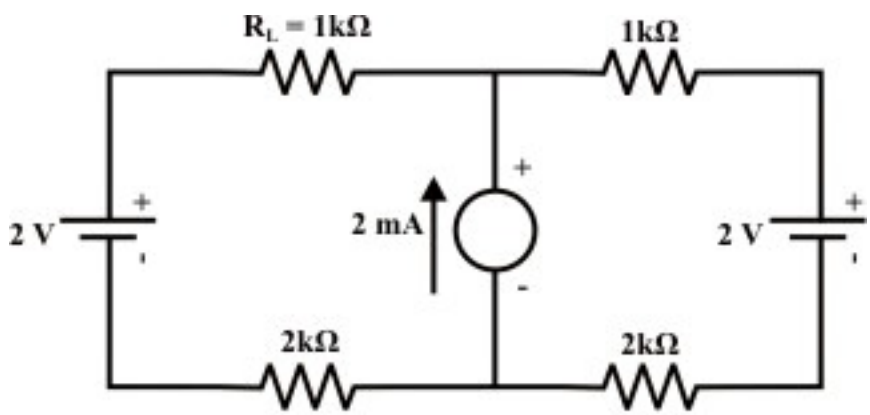

Figure 4.7

(Answer: $1mA; 10\,mW$)

T.4.8 Using 'mesh current' method, find the current flowing through 2Ω resistor for the circuit shown in Figure 4.8 and hence compute the power consumed by the same 2Ω resistor. [10]

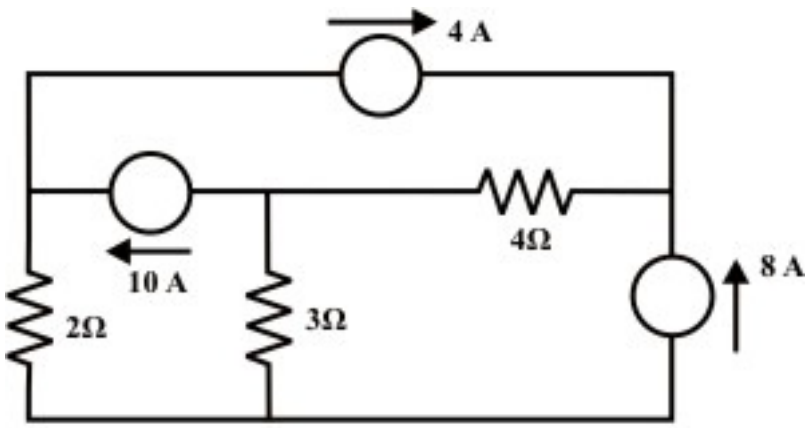

Figure 4.8

(Answer: $6\,A$; $72\,W$)

Module 2

DC Circuit

Lesson 5

Node-voltage analysis of resistive circuit in the context of dc voltages and currents

Objectives

- To provide a powerful but simple circuit analysis tool based on Kirchhoff's current law (KCL) only.

L.5.1 Node voltage analysis

In the previous lesson-4, it has been discussed in detail the analysis of a dc network by writing a set of simultaneous algebraic equations (based on KVL only) in which the variables are currents, known as mesh analysis or loop analysis. On the other hand, the node voltage analysis (Nodal analysis) is another form of circuit or network analysis technique, which will solve almost any linear circuit. In a way, this method completely analogous to mesh analysis method, writes KCL equations instead of KVL equations, and solves them simultaneously.

L.5.2 Solution of Electric Circuit Based on Node Voltage Method

In the node voltage method, we identify all the nodes on the circuit. Choosing one of them as the reference voltage (i.e., zero potential) and subsequently assign other node voltages (unknown) with respect to a reference voltage (usually ground voltage taken as zero (0) potential and denoted by ( ). If the circuit has "n" nodes there are "n-1" node voltages are unknown (since we are always free to assign one node to zero or ground potential). At each of these "n-1" nodes, we can apply KCL equation. The unknown node voltages become the independent variables of the problem and the solution of node voltages can be obtained by solving a set of simultaneous equations.

Let us consider a simple dc network as shown in Figure 5.1 to find the currents through different branches using **"Node voltage"** method.

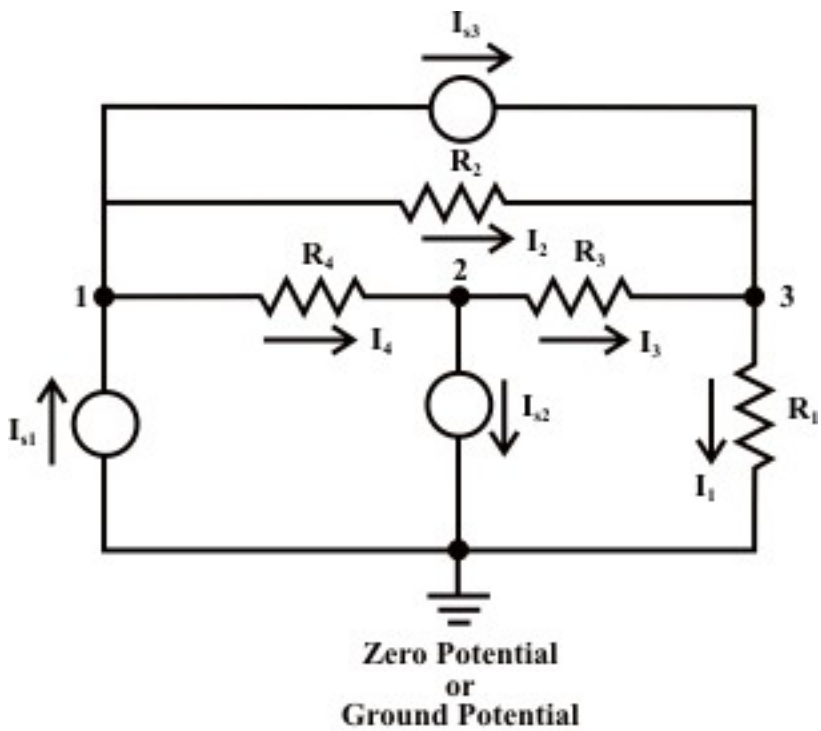

Fig. 5.1

KCL equation at **"Node-1":**

$$I_{s1} - I_{s3} - \left(\frac{V_1 - V_2}{R_4}\right) - \left(\frac{V_1 - V_3}{R_2}\right) = 0 \;;\; \rightarrow I_{s1} - I_{s3} - \left(\frac{1}{R_2} + \frac{1}{R_4}\right)V_1 - \left(\frac{1}{R_4}\right)V_2 - \left(\frac{1}{R_2}\right)V_3 = 0$$

$$I_{s1} - I_{s3} = G_{11}V_1 - G_{12}V_2 - G_{13}V_3 \qquad (5.1)$$

where G_{ii} = sum of total conductance (self conductance) connected to Node-1.

KCL equation at **"Node-2":**

$$\left(\frac{V_1 - V_2}{R_4}\right) - \left(\frac{V_2 - V_3}{R_3}\right) - I_{s2} = 0 \;;\; \rightarrow -I_{s2} = -\left(\frac{1}{R_4}\right)V_1 + \left(\frac{1}{R_3} + \frac{1}{R_4}\right)V_2 - \left(\frac{1}{R_3}\right)V_3$$

$$-I_{s2} = -G_{21}V_1 + G_{22}V_2 - G_{23}V_3 \qquad (5.2)$$

KCL equation at **"Node-3":**

$$I_{s3} + \left(\frac{V_2 - V_3}{R_3}\right) + \left(\frac{V_1 - V_3}{R_2}\right) - \left(\frac{V_3}{R_1}\right) = 0 \;;\; \rightarrow I_{s3} = -\left(\frac{1}{R_2}\right)V_1 - \left(\frac{1}{R_3}\right)V_2 + \left(\frac{1}{R_1} + \frac{1}{R_2} + \frac{1}{R_3}\right)V_3$$

$$I_{s3} = -G_{31}V_1 - G_{32}V_2 + G_{33}V_3 \qquad (5.3)$$

In general, for the ith Node the KCL equation can be written as

$$\sum I_{ii} = -G_{i1}V_1 - G_{i2}V_2 - \cdots\cdots + G_{ii}V_i - \cdots\cdots - G_{iN}V_N$$

where,

$\sum I_{ii} =$ algebraic sum of all the current sources connected to 'Node-i', $i = 1, 2, \cdots\cdots N$. (Currents entering the node from current source is assigned as +ve sign and the current leaving the node from the current source is assigned as –ve sign).

$G_{ii} =$ the sum of the values of conductance (reciprocal of resistance) connected to the node 'i'.

$G_{ij} =$ the sum of the values of conductance connected between the nodes 'i' *and* 'j'.

Summarize the steps to analyze a circuit by node voltage method are as follows:

Step-1: Identify all nodes in the circuit. Select one node as the reference node (assign as ground potential or zero potential) and label the remaining nodes as unknown node voltages with respect to the reference node.

Step-2: Assign branch currents in each branch. (The choice of direction is arbitrary).

Step-3: Express the branch currents in terms of node assigned voltages**.**

Step-4: Write the standard form of node equations by inspecting the circuit. (No of node equations = No of nodes (N) – 1).

Step-5: Solve a set of simultaneous algebraic equation for node voltages and ultimately the branch currents.

Remarks:

- Sometimes it is convenient to select the reference node at the bottom of a circuit or the node that has the largest number of branches connected to it.
- One usually makes a choice between a mesh and a node equations based on the least number of required equations.

Example-L-5.1: Find the value of the current I flowing through the battery using 'Node voltage' method.

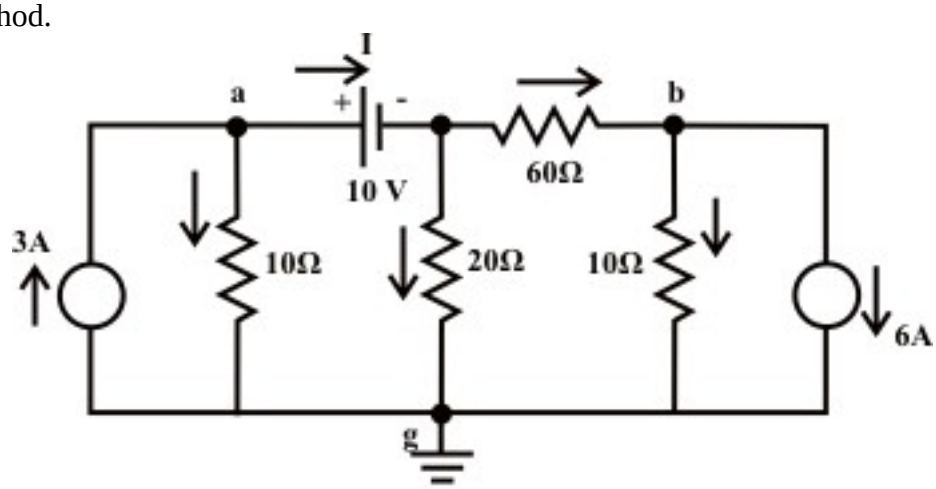

Fig. 5.2

Solution: All nodes are indicated in fig.5.2 and 'Node-g' is selected as reference voltage. If a voltage source is connected directly between the two nodes, the current flowing through the voltage source cannot be determined directly since the source voltage V_S is independent of current. Further to note that the source voltage V_S fixes the voltage between the nodes only. For the present example, the voltage of the central node is known since it is equal to $(V_a - 10)\,volt$.

KCL equation at node-a:

$$3 = \frac{V_a - 0}{10} + I \rightarrow 10I + V_a = 30 \tag{5.4}$$

KCL equation at node-b:

$$\frac{(V_a - 10) - V_b}{60} = 6 + \frac{V_b - 0}{10} \rightarrow V_a - 7V_b = 370 \tag{5.5}$$

To solve the equations (5.4)-(5.5), we need one more equation which can be obtained by applying KCL at the central node (note central node voltage is ($V_a - 10$).

$$I = \frac{V_a - 10}{20} + \frac{(V_a - 10) - V_b}{60} \rightarrow 60I = 4V_a - V_b - 40 \rightarrow I = \frac{(4V_a - V_b - 40)}{60} \tag{5.6}$$

Substituting the current expression (5.6) in equation (5.4) we get,

$$\frac{(4V_a - V_b - 40)}{6} + V_a = 30 \rightarrow 10V_a - V_b = 220 \tag{5.7}$$

Equations (5.5) and (5.7) can be solved to find $V_b = -50.43V$ *and* $V_a = 16.99V$.

We can now refer to original circuit (fig.5.2) to find directly the voltage across every element and the current through every element. The value of current flowing through the voltage source can be computed using the equation (5.6) and it is given by $I = 1.307\,A$. Note that the current I (+ve) is entering through the positive terminal of the voltage source and this indicates that the voltage source is absorbing the power, in other words this situation is observed when charging a battery or source.

Example-L-5.2: Find the **current** through 'ab-branch' (I_{ab}) and **voltage (**V_{cg} **)** across the current source using Node-voltage method.

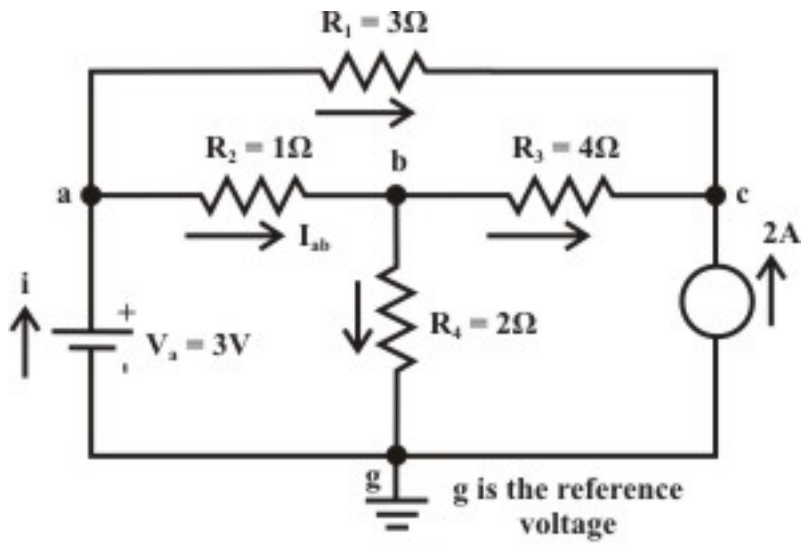

Fig. 5.3

Solution:

KCL at node-a: (note $V_a = 3V$)

$$i = \frac{V_a - V_b}{R_2} + \frac{V_a - V_c}{R_1} \rightarrow i = \left(\frac{1}{R_1} + \frac{1}{R_2}\right)V_a - \frac{1}{R_2}V_b - \frac{1}{R_1}V_c \rightarrow i = 1.33V_a - V_b - \frac{1}{3}V_c \qquad (5.8)$$

KCL at node-b: (note $V_g = 0V$)

$$\frac{V_a - V_b}{R_2} = \frac{V_b - V_c}{R_3} + \frac{V_b - V_g}{R_4} \rightarrow \left(1 + \frac{1}{4} + \frac{1}{2}\right)V_b - V_a - \frac{1}{4}V_c = 0 \qquad (5.9)$$

KCL at node-c:

$$2 + \frac{V_b - V_c}{R_3} + \frac{V_a - V_c}{R_1} = 0 \quad \rightarrow \left(\frac{1}{4} + \frac{1}{3}\right)V_c - \frac{1}{3}V_a - \frac{1}{4}V_b = 2 \qquad (5.10)$$

Using the value of $V_a = 3V$ in equations (5.8)-(5.10) we get the following equations:

$$V_b + \frac{1}{3}V_c = 3.99 - i \qquad (5.11)$$

$$1.75V_b - \frac{1}{4}V_c = 3 \qquad (5.12)$$

$$0.583V_c - \frac{1}{4}V_b = 3 \qquad (5.13)$$

Simultaneous solution of the above three equations, one can get $V_c = 6.26V$, $V_b = 2.61V$ and hence $I_{ab} = \frac{V_a - V_b}{R_2} = \frac{3 - 2.61}{1} = 0.39A$ (current flowing in the direction from 'a' to 'b').

Example-L-5.3 Determine the current, i shown in fig. 5.4 using node-voltage method --- (a) applying voltage to current source conversion (b) without any source conversion.

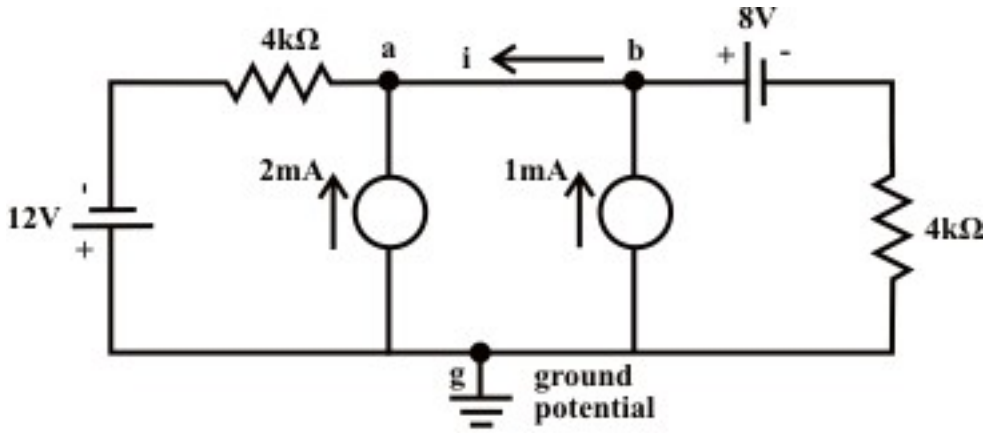

Fig. 5.4

Solution:

Part(a):

In node voltage analysis, sometimes the solution turns out to be very simple while we change all series branches containing voltage sources to their equivalent current sources. On the other hand, we observed in the loop analysis method that the conversion of current source to an equivalent voltage makes the circuit analysis very easy (see example-L4.2) and simple. For this example, both the practical voltage sources (one is left of 'node-a' and other is right of 'node-b') are converted into practical current sources. After transformation, the circuit is redrawn and shown in fig. 5.5(a).

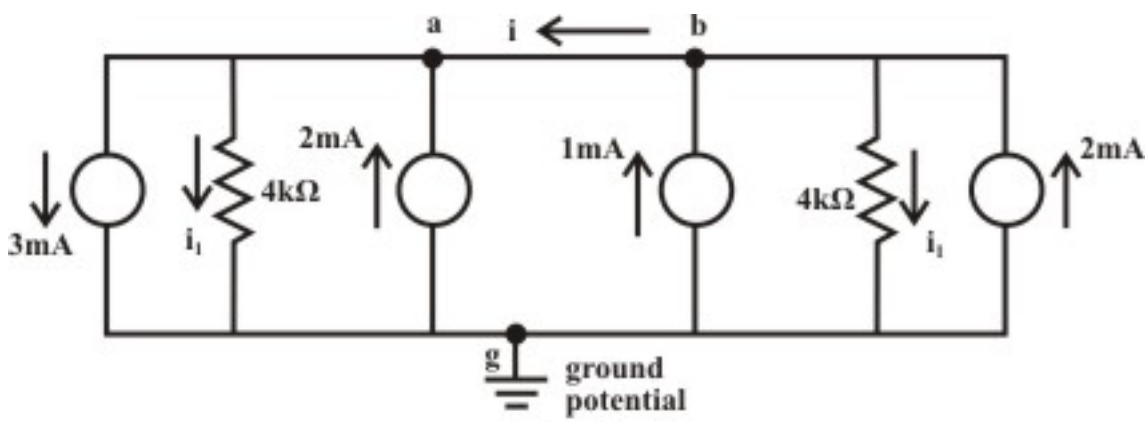

Fig. 5.5(a)

KCL at node 'b':

$$i + i_1 = 2 + 1 = 3 \tag{5.14}$$

KCL at node 'a':

$$i + 2 = 3 + i_1 \rightarrow i - i_1 = 1 \tag{5.15}$$

From equations (5.14)-(5.15), one can get $i = 2\,mA$ (current flows from 'b' to 'a') and $i_1 = 1\,mA$.

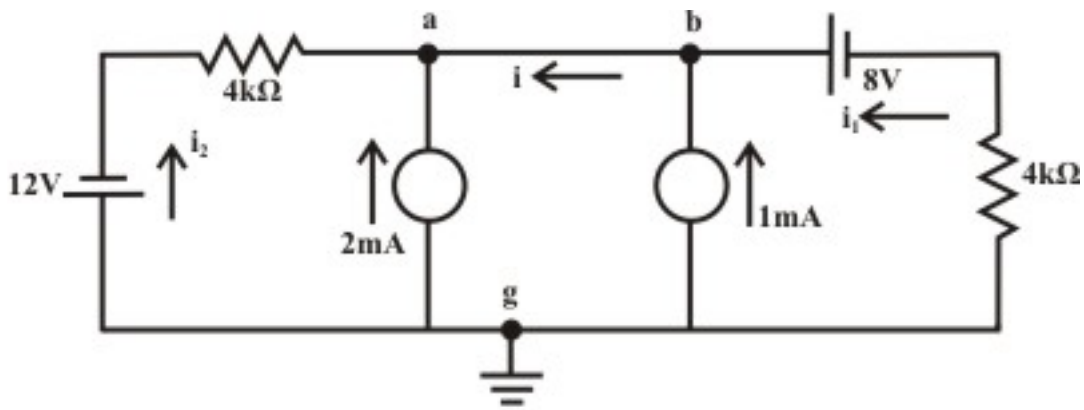

Fig. 5.5(b)

Part(b):

Let us assume i_1 is the current flowing through the $8V$ battery source from 'right to left' and i_2 is the current flowing through the $12V$ battery source from 'bottom to top'(see Fig.5.5(b)).

KCL at node 'b': It is assumed that the current flowing in $4k\Omega$ resistor from bottom to top terminal. This implies that the bottom terminal of $4k\Omega$ resistor is higher potential than the top terminal.(currents are in mA, note $V_a = V_b$)

$$i = 1 + i_1 \rightarrow i = 1 + \frac{0-(V_a - 8)}{4} \qquad (5.16)$$

KCL at node 'a': (currents are in mA)

$$i + i_2 + 2 = 0 \rightarrow i = -i_2 - 2 \rightarrow i = -\left(\frac{-12 - V_a}{4}\right) - 2 \qquad (5.17)$$

From (6.16) and (5.17), we get $V_a = 4V$ and $i = 2mA$ (current flows from 'b' to 'a').

L.5.3 Test Your Understanding [Marks: 50]

T.5.1 Node analysis makes use of Kirchhoff's---------- law just as loop analysis makes use of Kirchhoff's --------- law. [1]

T.5.2 Describe a means of telling how many node voltage equations will be required for a given circuit. [1]

T.5.3 In nodal analysis how are voltage sources handled when (i) a voltage source in a circuit is connected between a non-reference node and the reference node (ii) a voltage source connected between two non-reference nodes in nodal analysis. [4]

T.5.4 A voltage in series with a resistance can be represented by an equivalent circuit that consists of ---------- in parallel with that ----------. [2]

T.5.5 The algebraic sum of the currents ---------- in a node must be equal to the algebraic sum of currents --------- the node. [2]

T.5.6 Apply node voltage analysis to find i_0 and the power dissipated in each resistor in the circuit of Fig.5.6. [10]

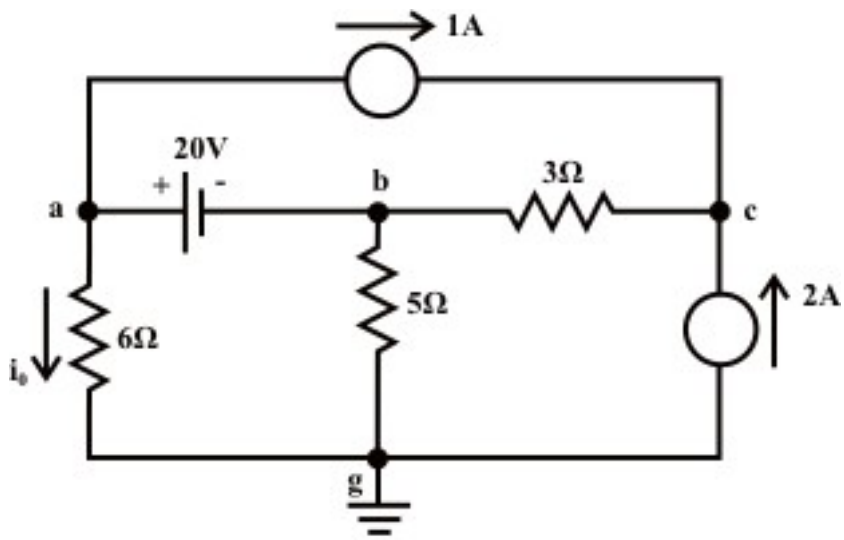

Fig. 5.6

(Ans. $i_0 = 2.73A, P_6 = 44.63W,\ P_5 = 3.8W,\ P_3 = 0.333W\,(note \rightarrow V_c = 5.36V,\ V_b = 4.36V)$

T.5.7 For the circuit shown in fig. 5.7, find V_a using the node voltage method. Calculate power delivered or absorbed by the sources. [10]

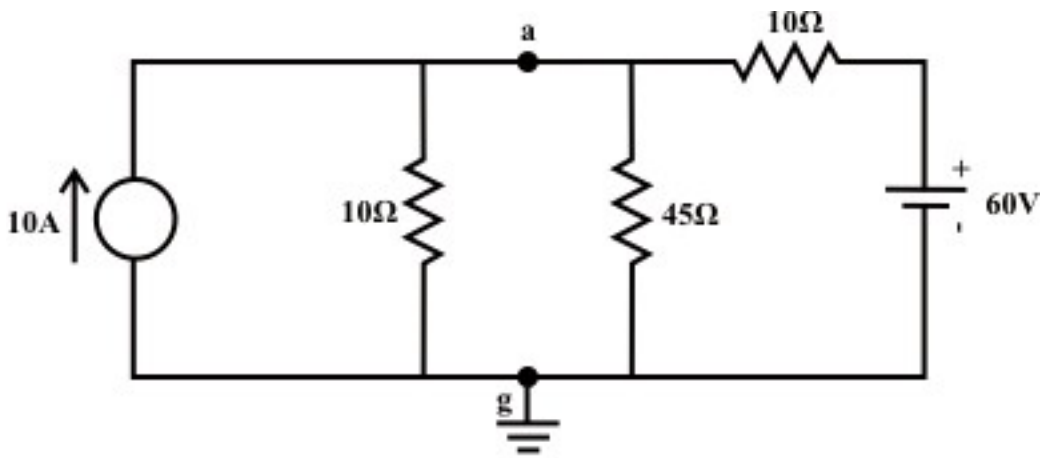

Fig. 5.7

(Answer: $V_a = 72V, P_{(voltage\,source)} =\ 72W\,(absorbed), P_{(current\,source)} = 201.8W\,(delivered)$)

T.5.8 Using nodal analysis, solve the voltage (V_x) across the $6A$ current source for the circuit of fig. 5.8. Calculate power delivered or absorbed by the sources [10]

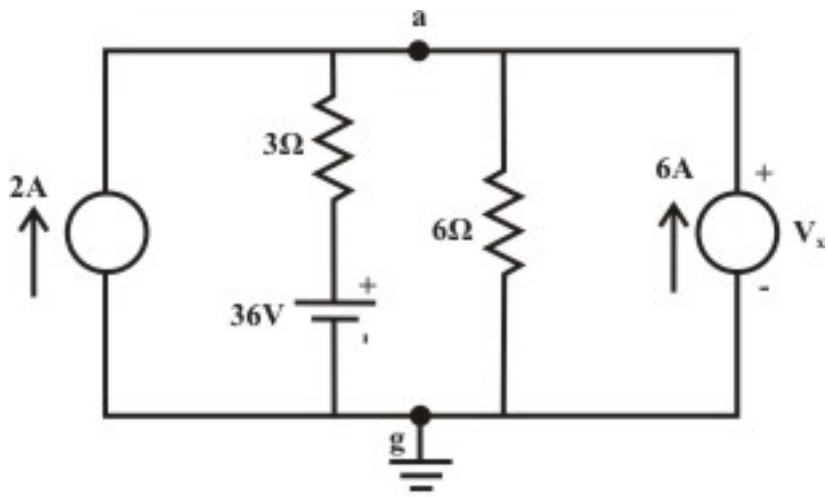

Fig. 5.8

(Answer: $V_a = 60V, P_{(12A\ ideal\ current\ source)} = 720W(delivered),$
$P_{(ideal\ voltage\ source)} = 288W(absorbed), P_{(6A\ ideal\ current\ source)} = 360W(delivered)$

T.8 Determine the voltage across the 10Ω resistor of fig. 5.9 using nodal analysis. [10]

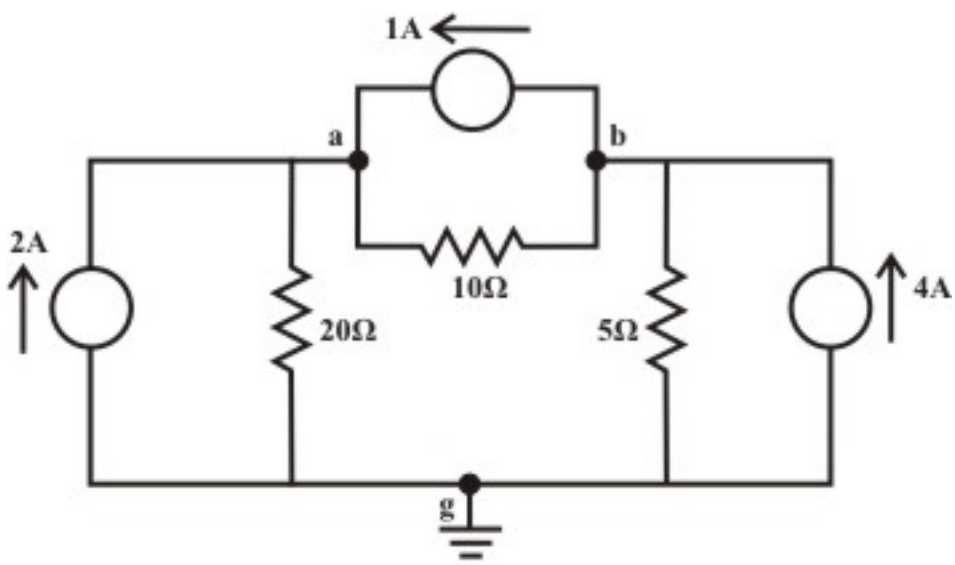

Fig. 5.9

(Answer: $V_{ab} = 34.29V$ (*a is higher potential than b*)

Module 2

DC Circuit

Lesson 6

Wye (Y) - Delta (Δ) OR Delta (Δ)-Wye (Y) Transformations

Objectives

- A part of a larger circuit that is configured with three terminal network Y (or Δ) to convert into an equivalent Δ (or Y) through transformations.
- Application of these transformations will be studied by solving resistive circuits.

L.6.1 Introduction

There are certain circuit configurations that cannot be simplified by series-parallel combination alone. A simple transformation based on mathematical technique is readily simplifies the electrical circuit configuration. A circuit configuration shown below

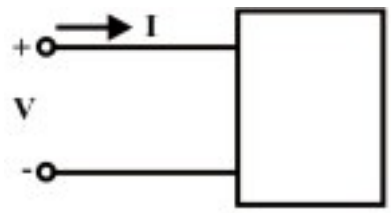

Fig. 6.1(a) One port network

is a general **one-port circuit.** When any voltage source is connected across the terminals, the current entering through any one of the two terminals, equals the current leaving the other terminal. For example, resistance, inductance and capacitance acts as a **one-port.** On the other hand, a **two-port** is a circuit having two pairs of terminals. Each pair behaves as a one-port; current entering in one terminal must be equal to the current living the other terminal.

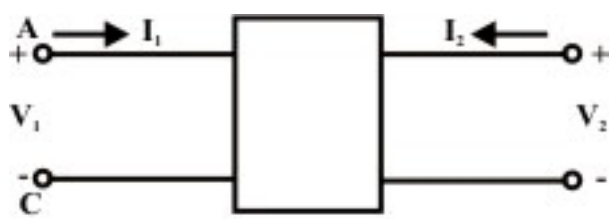

Fig. 6.1(b) Two port network

Fig.6.1.(b) can be described as a four terminal network, for convenience subscript 1 to refer to the variables at the input port (at the left) and the subscript 2 to refer to the variables at the output port (at the right). The most important subclass of two-port networks is the one in which the minus reference terminals of the input and output ports are at the same. This circuit configuration is readially possible to consider the 'π *or* Δ' – network also as a three-terminal network in fig.6.1(c). Another frequently encountered circuit configuration that shown in fig.6.1(d) is approximately refered to as a three-terminal Y connected circuit as well as two-port circuit.

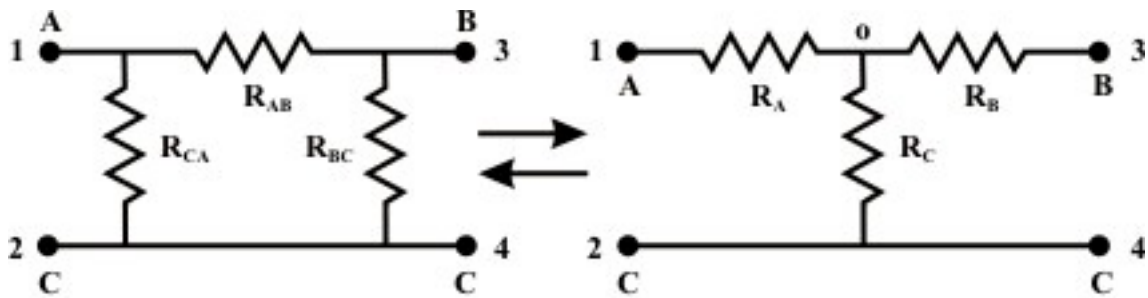

Fig. 6.1 (c) Fig. 6.1 (d)

The name derives from the shape or configuration of the circuit diagrams, which look respectively like the letter Y and the Greek capital letter Δ.

L.6.1.1 Delta (Δ) – Wye (Y) conversion

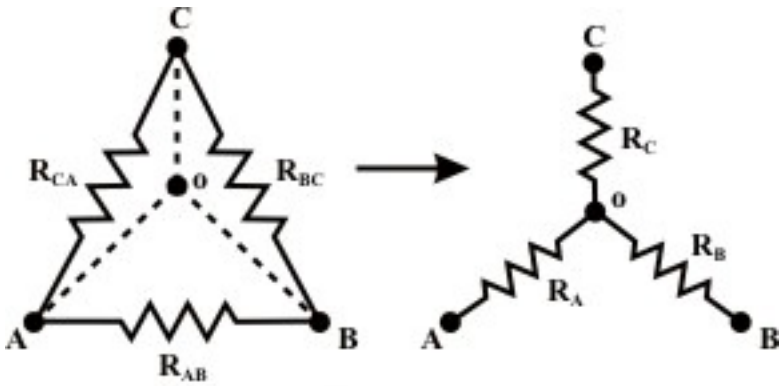

Fig. 6.1 (e)

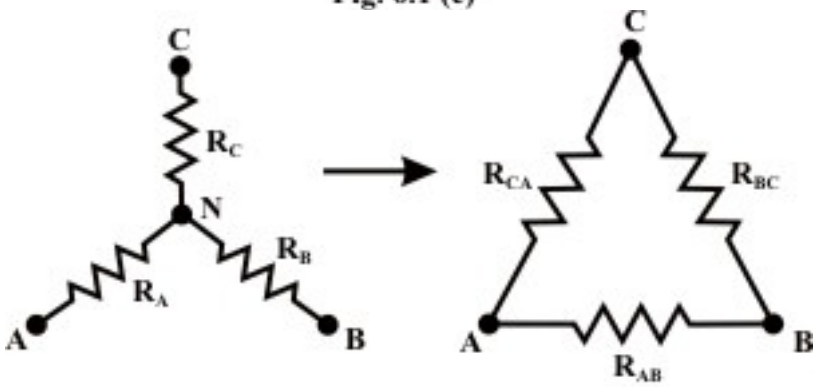

Fig. 6.1 (f)

These configurations may often be handled by the use of a $\Delta - Y$ or $Y - \Delta$ transformation. One of the most basic three-terminal network equivalent is that of three resistors connected in "Delta (Δ)" and in "Wye (Y)". These two circuits identified in fig.L6.1(e) and Fig.L.6.1(f) are sometimes part of a larger circuit and obtained their names from their configurations. These three terminal networks can be redrawn as four-terminal networks as shown in fig.L.6.1(c) and fig.L.6.1(d). We can obtain useful expression for direct

transformation or conversion from Δ to Y or Y to Δ by considering that for equivalence the two networks have the same resistance when looked at the similar pairs of terminals.

L.6.2 Conversion from Delta (Δ) to Star or Wye (Y)

Let us consider the network shown in fig.6.1(e) (or fig. $6.1(c)\rightarrow$) and assumed the resistances (R_{AB} ,R_{BC} , *and* R_{CA}) in Δ network are known. Our problem is to find the values of R_A, R_B, *and* R_C in Wye (Y) network (see fig.6.1(e)) that will produce the same resistance when measured between similar pairs of terminals. We can write the equivalence resistance between any two terminals in the following form.

Between A & C **terminals:**

$$R_A + R_C = \frac{R_{CA}\left(R_{AB} + R_{BC}\right)}{R_{AB} + R_{BC} + R_{CA}} \tag{6.1}$$

Between C & B **terminals:**

$$R_C + R_B = \frac{R_{BA}\left(R_{AB} + R_{CA}\right)}{R_{AB} + R_{BC} + R_{CA}} \tag{6.2}$$

Between B & A terminals:

$$R_B + R_A = \frac{R_{AB}\left(R_{CA} + R_{BC}\right)}{R_{AB} + R_{BC} + R_{CA}} \tag{6.3}$$

By combining above three equations, one can write an expression as given below.

$$R_A + R_B + R_C = \frac{R_{AB}R_{BC} + R_{BC}R_{CA} + R_{CA}R_{AB}}{R_{AB} + R_{BC} + R_{CA}} \tag{6.4}$$

Subtracting equations (6.2), (6.1), and (6.3) from (6.4) equations, we can write the express for unknown resistances of Wye (Y) network as

$$R_A = \frac{R_{AB}R_{CA}}{R_{AB} + R_{BC} + R_{CA}} \tag{6.5}$$

$$R_B = \frac{R_{AB}R_{BC}}{R_{AB} + R_{BC} + R_{CA}} \tag{6.6}$$

$$R_C = \frac{R_{BC}R_{CA}}{R_{AB} + R_{BC} + R_{CA}} \tag{6.7}$$

L.6.2.1 Conversion from Star or Wye (Y) to Delta (Δ)

To convert a **Wye** ($\underline{Y}$) to a **Delta** (Δ), the relationships R_{AB}, R_{BC}, *and* R_3 must be obtained in terms of the **Wye** ($\underline{Y}$) resistances R_A, R_B, *and* R_C (referring to fig.6.1 (f)). Considering the Y connected network, we can write the current expression through R_A resistor as

$$I_A = \frac{(V_A - V_N)}{R_A} \quad \text{(for } Y \text{ network)} \tag{6.8}$$

Appling KCL at 'N' for Y connected network (assume A, B, C terminals having higher potential than the terminal N) we have,

$$\frac{(V_A - V_N)}{R_A} + \frac{(V_B - V_N)}{R_B} + \frac{(V_C - V_N)}{R_C} = 0 \quad \Rightarrow V_N\left(\frac{1}{R_A} + \frac{1}{R_B} + \frac{1}{R_C}\right) = \left(\frac{V_A}{R_A} + \frac{V_B}{R_B} + \frac{V_C}{R_C}\right)$$

$$\text{or,} \quad \Rightarrow V_N = \frac{\left(\frac{V_A}{R_A} + \frac{V_B}{R_B} + \frac{V_C}{R_C}\right)}{\left(\frac{1}{R_A} + \frac{1}{R_B} + \frac{1}{R_C}\right)} \tag{6.9}$$

For Δ-network (see fig.6.1.(f)),
Current entering at terminal A = Current leaving the terminal 'A'

$$I_A = \frac{V_{AB}}{R_{AB}} + \frac{V_{AC}}{R_{AC}} \quad \text{(for } \Delta \text{ network)} \tag{6.10}$$

From equations (6.8) and (6.10),

$$\frac{(V_A - V_N)}{R_A} = \frac{V_{AB}}{R_{AB}} + \frac{V_{AC}}{R_{AC}}$$

Using the V_N expression in the above equation, we get

$$\frac{\left(V_A - \frac{\left(\frac{V_A}{R_A} + \frac{V_B}{R_B} + \frac{V_C}{R_C}\right)}{\left(\frac{1}{R_A} + \frac{1}{R_B} + \frac{1}{R_C}\right)}\right)}{R_A} = \frac{V_{AB}}{R_{AB}} + \frac{V_{AC}}{R_{AC}} \quad \Rightarrow \quad \frac{\left(\frac{\left(\frac{V_A - V_B}{R_B} + \frac{V_A - V_C}{R_C}\right)}{\left(\frac{1}{R_A} + \frac{1}{R_B} + \frac{1}{R_C}\right)}\right)}{R_A} = \frac{V_{AB}}{R_{AB}} + \frac{V_{AC}}{R_{AC}}$$

$$\text{or} \quad \frac{\left(\frac{\left(\frac{V_{AB}}{R_B} + \frac{V_{AC}}{R_C}\right)}{\left(\frac{1}{R_A} + \frac{1}{R_B} + \frac{1}{R_C}\right)}\right)}{R_A} = \frac{V_{AB}}{R_{AB}} + \frac{V_{AC}}{R_{AC}} \tag{6.11}$$

Equating the coefficients of V_{AB} and V_{AC} in both sides of eq.(6.11), we obtained the following relationship.

$$\frac{1}{R_{AB}} = \frac{1}{R_A R_B \left(\frac{1}{R_A} + \frac{1}{R_B} + \frac{1}{R_C} \right)} \Rightarrow R_{AB} = R_A + R_B + \frac{R_A R_B}{R_C} \tag{6.12}$$

$$\frac{1}{R_{AC}} = \frac{1}{R_A R_C \left(\frac{1}{R_A} + \frac{1}{R_B} + \frac{1}{R_C} \right)} \Rightarrow R_{AC} = R_A + R_C + \frac{R_A R_C}{R_B} \tag{6.13}$$

Similarly, I_B for both the networks (see fig.61(f)) are given by

$$I_B = \frac{(V_B - V_N)}{R_B} \quad \text{(for } Y \text{ network)}$$

$$I_B = \frac{V_{BC}}{R_{BC}} + \frac{V_{BA}}{R_{BA}} \quad \text{(for } \Delta \text{ network)}$$

Equating the above two equations and using the value of V_N (see eq.(6.9), we get the final expression as

$$\frac{\left(\frac{\left(\frac{V_{BC}}{R_C} + \frac{V_{BA}}{R_A} \right)}{\left(\frac{1}{R_A} + \frac{1}{R_B} + \frac{1}{R_C} \right)} \right)}{R_B} = \frac{V_{BC}}{R_{BC}} + \frac{V_{BA}}{R_{BA}}$$

Equating the coefficient of V_{BC} in both sides of the above equations we obtain the following relation

$$\frac{1}{R_{BC}} = \frac{1}{R_B R_C \left(\frac{1}{R_A} + \frac{1}{R_B} + \frac{1}{R_C} \right)} \Rightarrow R_{BC} = R_B + R_C + \frac{R_B R_C}{R_A} \tag{6.14}$$

When we need to transform a Delta (Δ) network to an equivalent Wye (Y) network, the equations (6.5) to (6.7) are the useful expressions. On the other hand, the equations (6.12) – (6.14) are used for Wye (Y) to Delta (Δ) conversion.

Observations

In order to note the symmetry of the transformation equations, the Wye (Y) and Delta (Δ) networks have been superimposed on each other as shown in fig. 6.2.

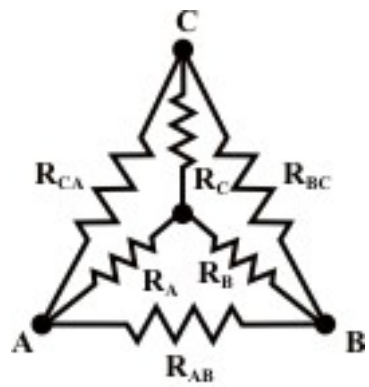

Fig. 6.2

- The equivalent star (Wye) resistance connected to a given terminal is equal to the product of the two Delta (Δ) resistances connected to the same terminal divided by the sum of the Delta (Δ) resistances (see fig. 6.2).
- The equivalent Delta (Δ) resistance between two-terminals is the sum of the two star (Wye) resistances connected to those terminals plus the product of the same two star (Wye) resistances divided by the third star (Wye (Y)) resistance (see fig.6.2).

L.6.3 Application of Star (Y) to Delta (Δ) or Delta (Δ) to Star (Y) Transformation

Example: L.6.1 Find the value of the voltage source (V_S) that delivers 2 Amps current through the circuit as shown in fig.6.3.

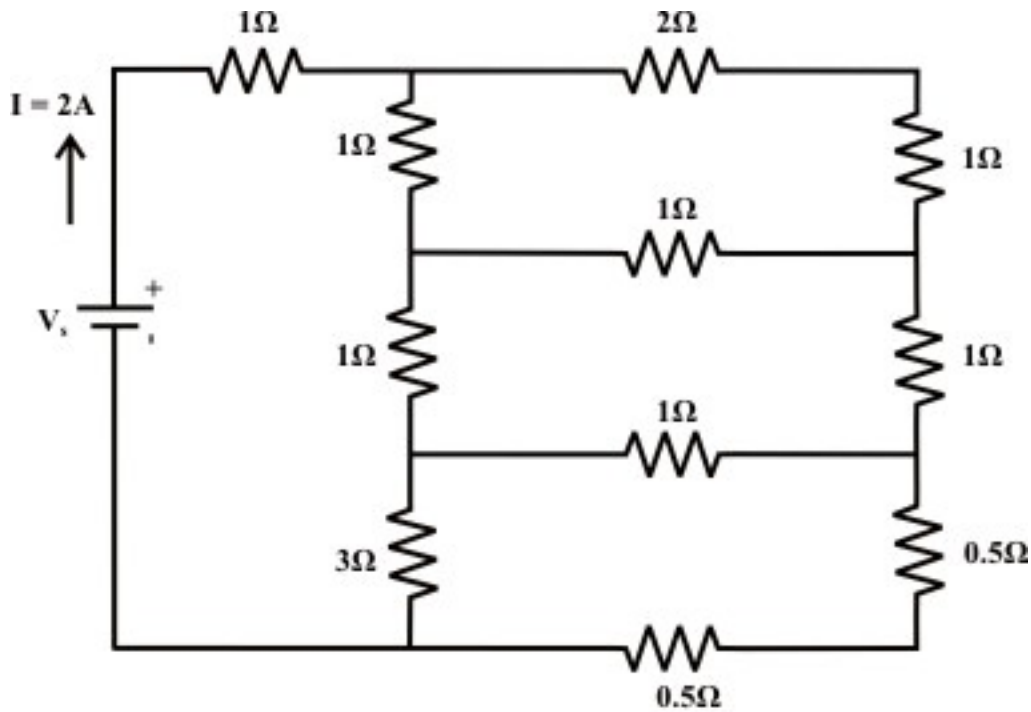

Fig. 6.3

Solution:

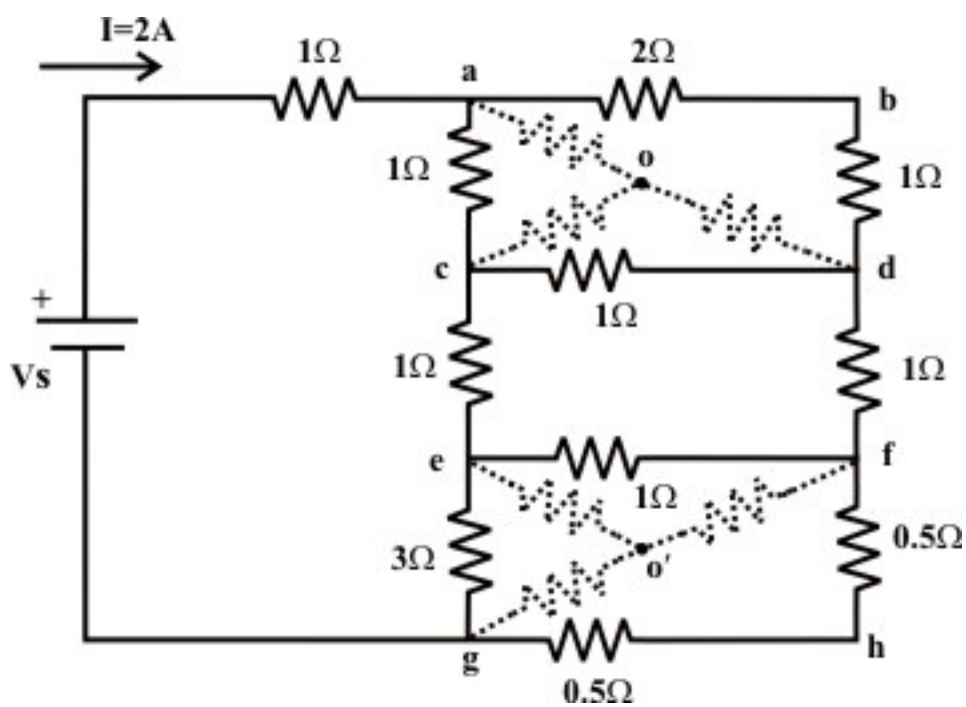

Convert the three terminals Δ-network (a-c-d & e-f-g) into an equivalent Y-connected network. Consider the Δ-connected network 'a-c-d' and the corresponding equivalent Y-connected resistor values are given as

$$R_{ao} = \frac{3\times1}{5} = 0.6\Omega;\ R_{co} = \frac{1\times1}{5} = 0.2\Omega;\ R_{do} = \frac{3\times1}{5} = 0.6\Omega$$

Similarly, for the Δ-connected network 'e-f-g' the equivalent the resistances of Y-connected network are calculated as

$$R_{eo'} = \frac{3\times1}{5} = 0.6\Omega;\ R_{go'} = \frac{3\times1}{5} = 0.6\Omega; R_{fo'} = \frac{1\times1}{5} = 0.2\Omega$$

Now the original circuit is redrawn after transformation and it is further simplified by applying series-parallel combination formula.

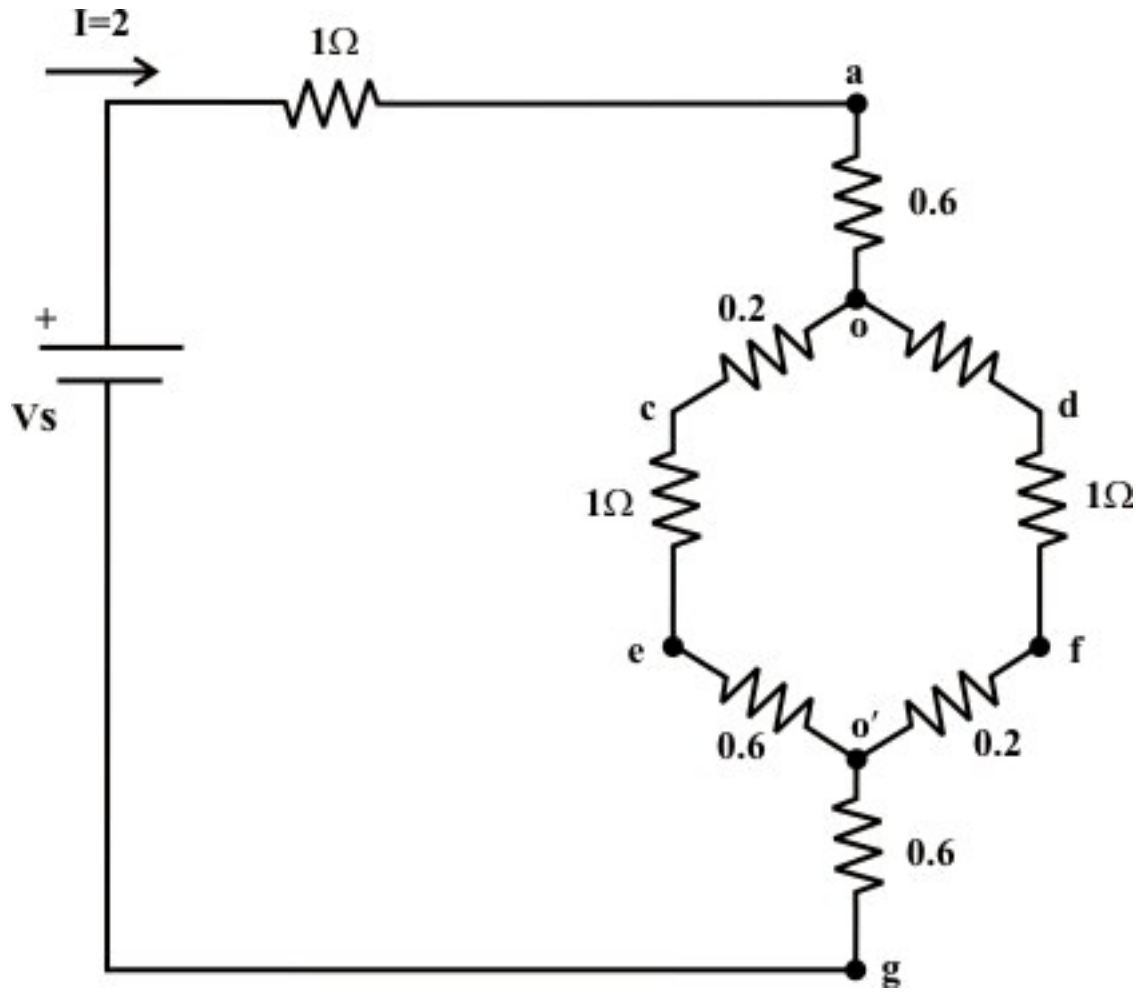

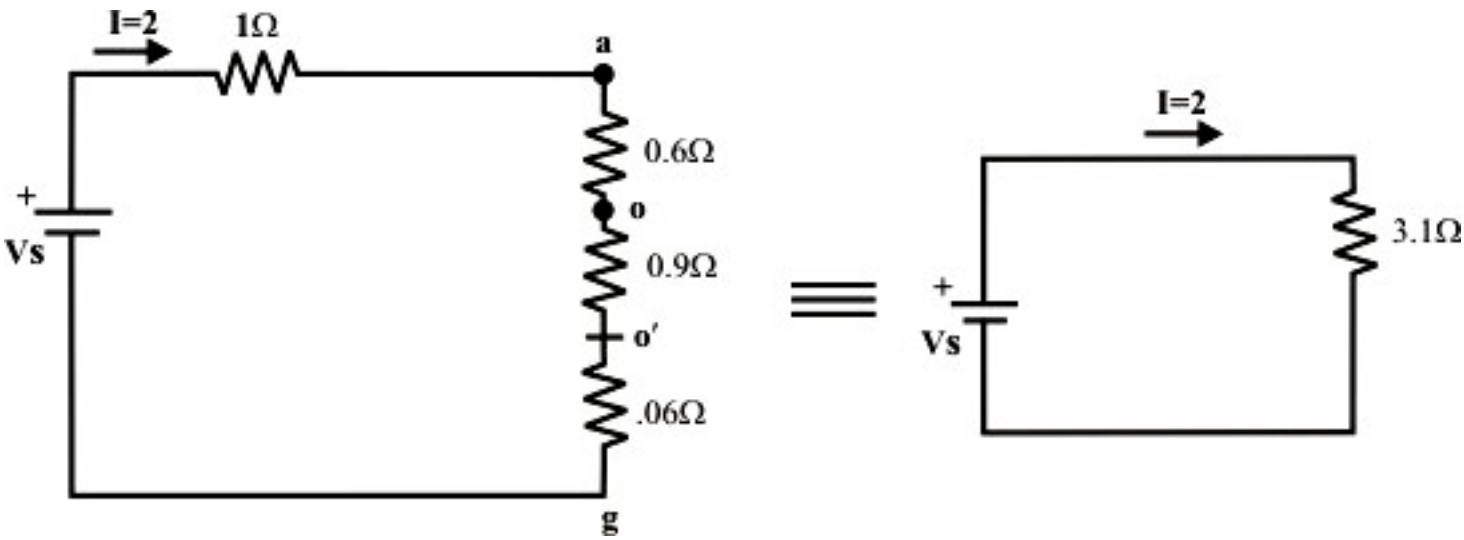

The source V_s that delivers $2A$ current through the circuit can be obtained as $V_s = I \times 3.2 = 2 \times 3.1 = 6.2 Volts$.

Example: L.6.2 Determine the equivalent resistance between the terminals A *and* B of network shown in fig.6.4 (a).

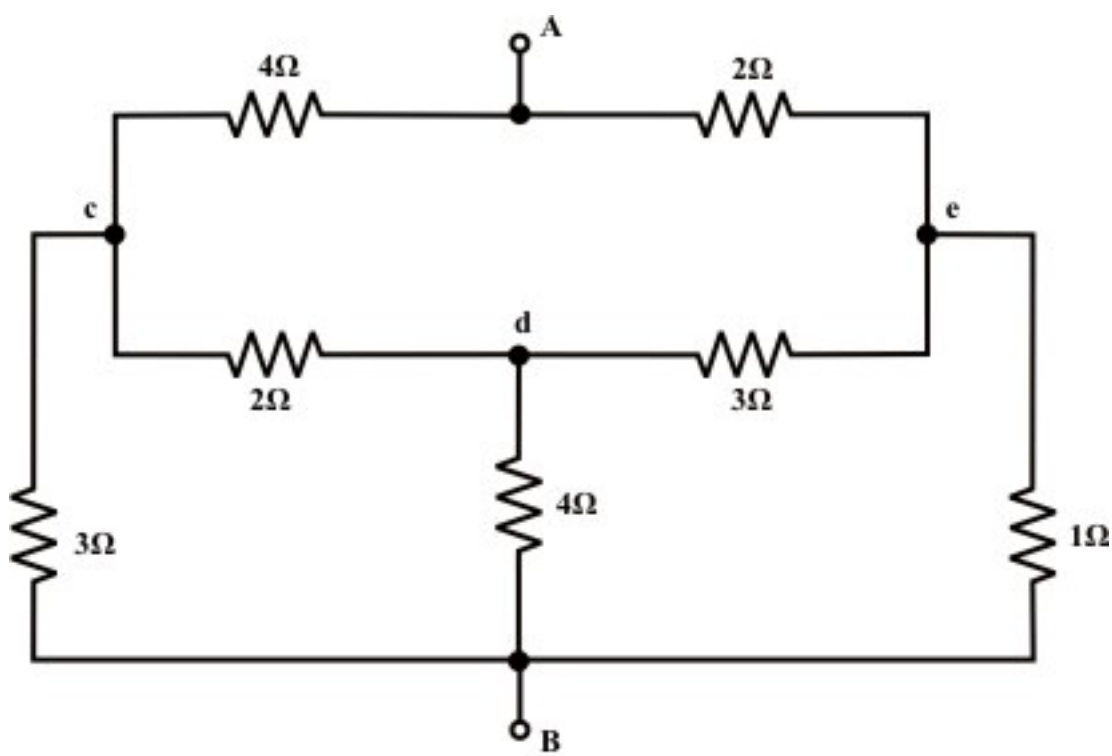

Fig. 6.4 (a)

Solution:

A 'Δ' is substituted for the 'Y' between points c, d, and e as shown in fig.6.4(b); then unknown resistances value for Y *to* Δ transformation are computed below.

$$R_{cB} = 2+4+\frac{2\times 4}{3} = 8.66\Omega;\ R_{eB} = 3+4+\frac{4\times 3}{2} = 13\Omega;\ R_{ce} = 2+3+\frac{2\times 3}{4} = 6.5\Omega$$

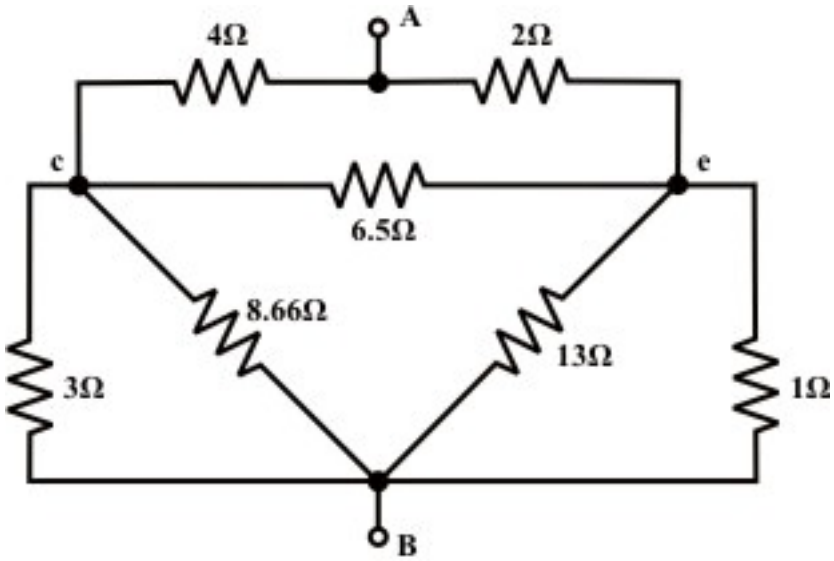

Fig. 6.4 (b)

Next we transform 'Δ'connected 3-terminal resistor to an equivalent 'Y' connected network between points 'A'; 'c' and 'e' (see fig.6.4(b)) and the corresponding Y connected resistances value are obtained using the following expression. Simplified circuit after conversion is shown in fig. 6.4(c).

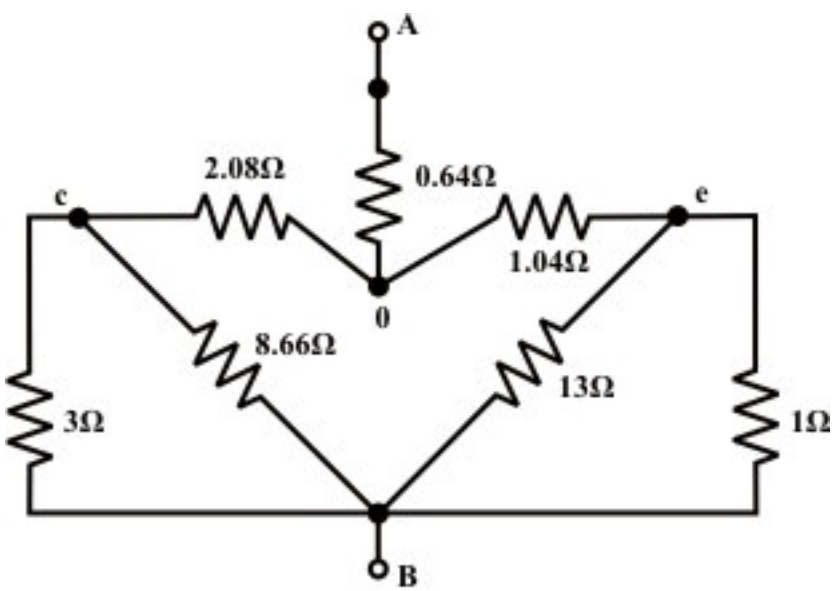

Fig. 6.4 (c)

$$R_{Ao} = \frac{4\times 2}{4+2+6.5} = 0.64\Omega;\ R_{co} = \frac{4\times 6.5}{4+2+6.5} = 2.08\Omega;\ R_{eo} = \frac{6.5\times 2}{4+2+6.5} = 1.04\Omega;$$

The circuit shown in fig.6.5(c) can further be reduced by considering two pairs of parallel branches $3\|8.66$ *and* $13\|1$ and the corresponding simplified circuit is shown in fig.6.4(d).

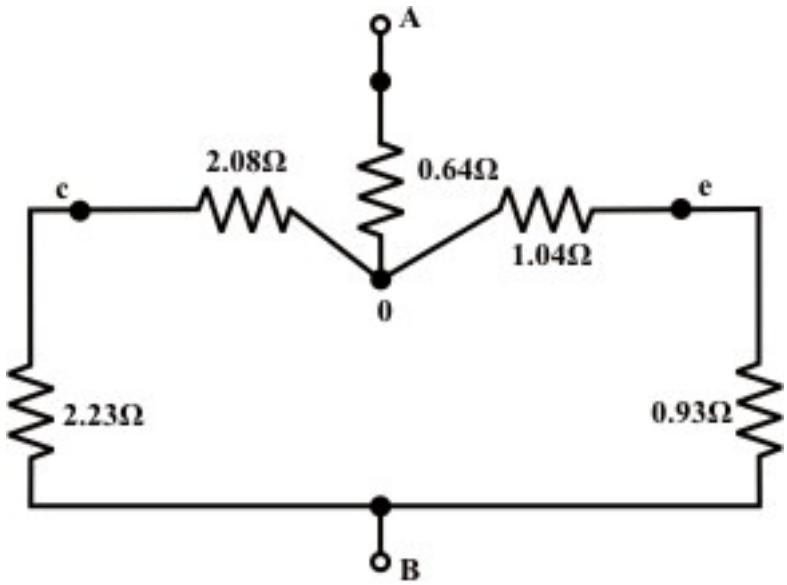

Fig. 6.4 (d)

Now one can find the equivalent resistance between the terminals 'A' and 'B' as $R_{AB} = (2.23+2.08)\|(1.04+0.93)+0.64 = 2.21\Omega$.

Example: L.6.3 Find the value of the input resistance R_{in} of the circuit.

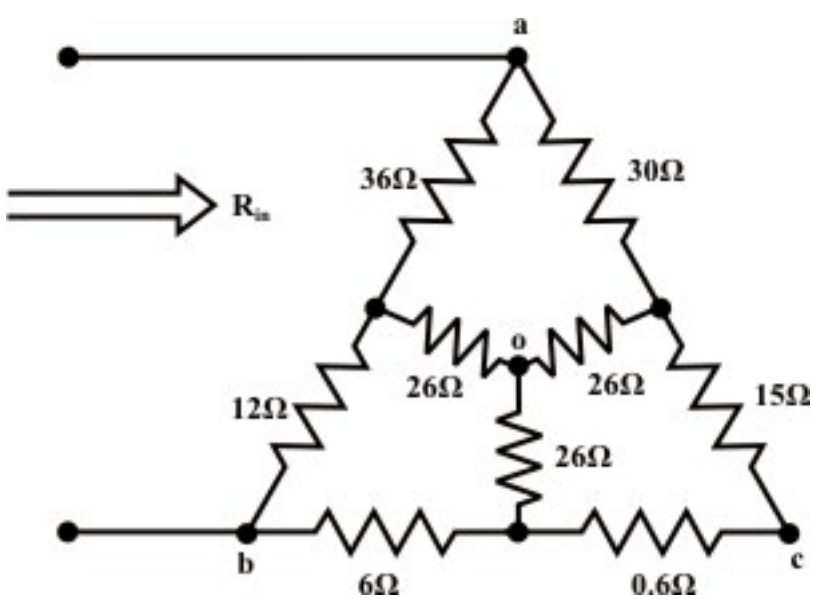

Solution:

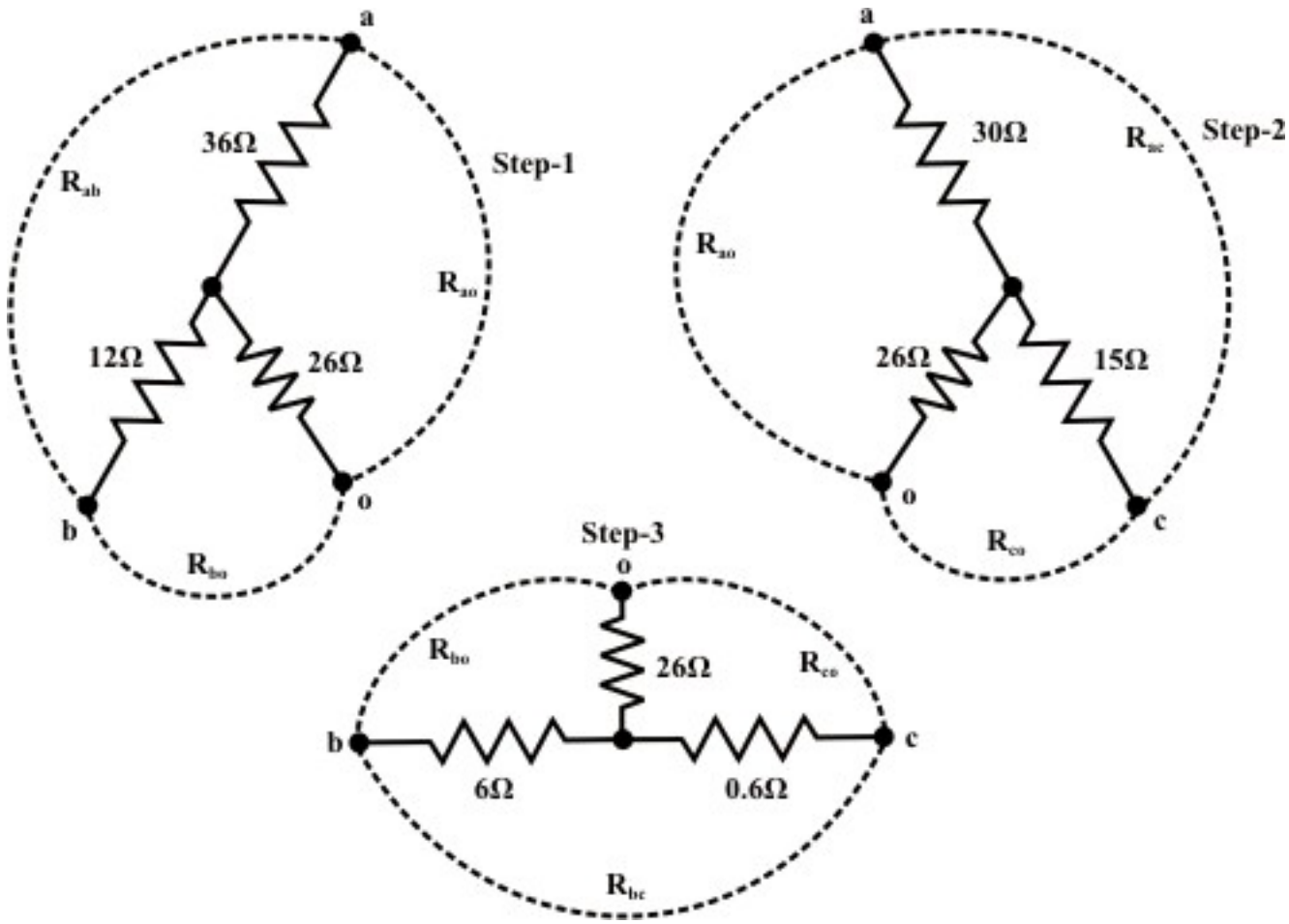

Y connected network formed with the terminals a-b-o is transformed into Δ connected one and its resistance values are given below.

$$R_{ab} = 36 + 12 + \frac{36 \times 12}{26} = 64.61\Omega \; ; \quad R_{bo} = 12 + 26 + \frac{26 \times 12}{36} = 46.66\Omega$$

$$R_{ao} = 26 + 36 + \frac{26 \times 36}{12} = 140\Omega$$

Similarly, Y connected networks formed with the terminals 'b-c-o' and 'c-a-o' are transformed to Δ connected networks.

$$R_{bc} = 6 + 0.6 + \frac{6 \times 0.6}{26} = 6.738\Omega \; ; \; R_{co} = 0.6 + 26 + \frac{0.6 \times 26}{6} = 29.2\Omega$$

$$R_{b0} = 6 + 26 + \frac{6 \times 26}{0.6} = 34.60\Omega$$

and, $R_{co} = 15 + 26 + \frac{15 \times 26}{30} = 54.00\Omega \quad ; \quad R_{ao} = 30 + 26 + \frac{30 \times 26}{15} = 108\Omega$

$$R_{ac} = 30 + 15 + \frac{30 \times 15}{26} = 62.31\Omega$$

Note that the two resistances are connected in parallel $(140 \| 108)$ between the points 'a' and 'o'. Similarly, between the points 'b' and 'o' two resistances are connected in parallel $(46.66 \| 34.6)$ and resistances 54.0Ω and 29.2Ω are connected in parallel between the points 'c' and 'o'.

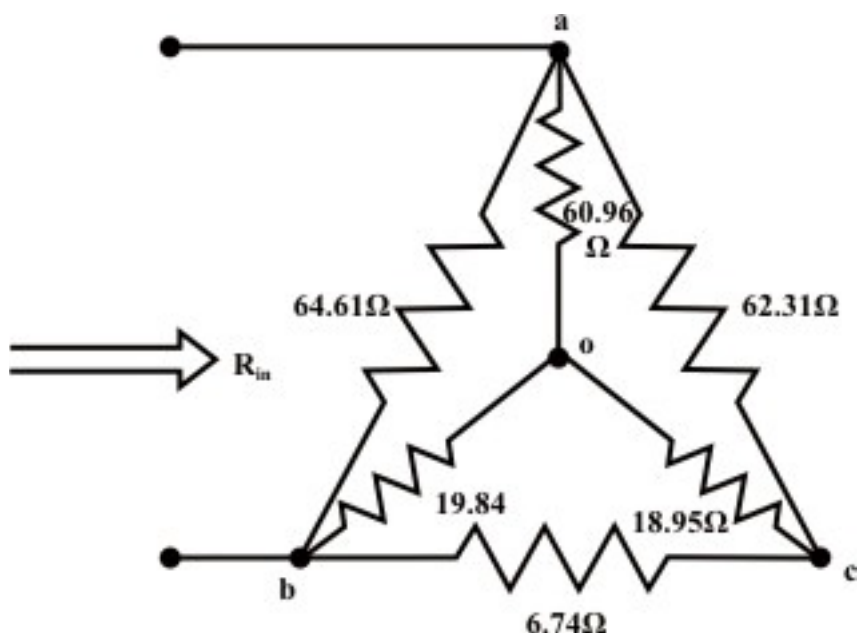

Now Y connected network formed with the terminal 'a-b-c' is converted to equivalent Δ connected network.

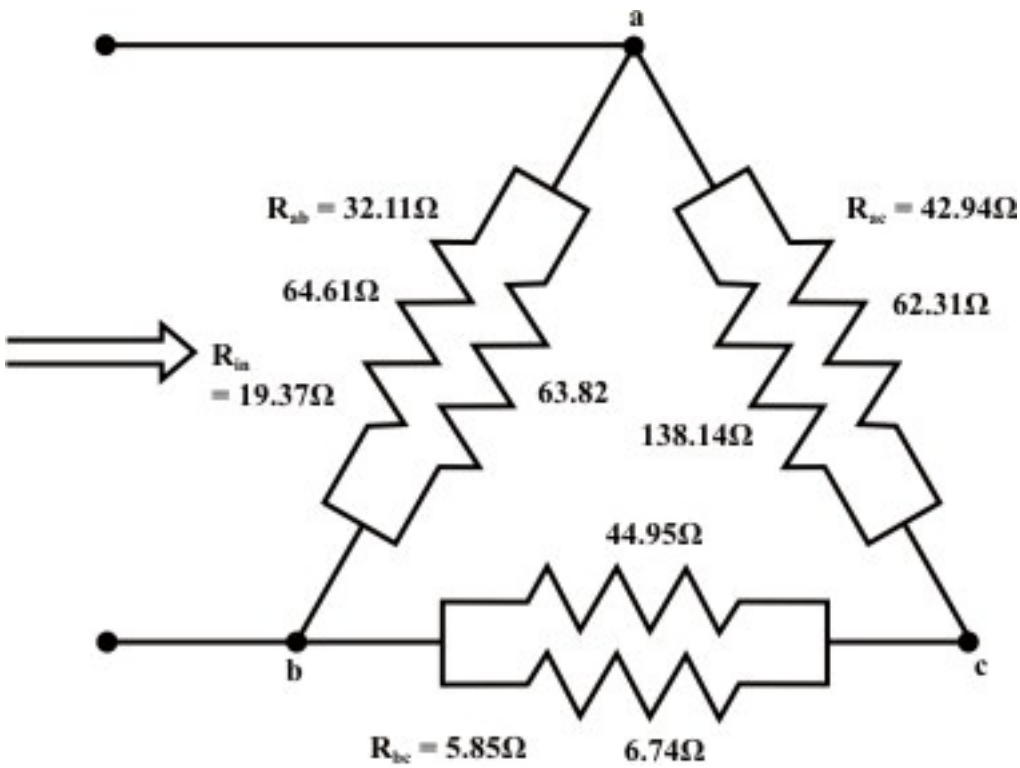

Now, $R_{in} = \dfrac{(R_{ac} + R_{bc})R_{ab}}{R_{ab} + R_{bc} + R_{ca}} = 19.37\Omega$

Remarks:

- If the Δ *or* Y connected network consists of inductances (assumed no mutual coupling forms between the inductors) then the same formula can be used for Y *to* Δ *or* Δ *to* Y conversion (see in detail 3-phase ac circuit analysis in Lesson-19).
- On the other hand, the Δ *or* Y connected network consists of capacitances can be converted to an equivalent Y *or* Δ network provided the capacitance value is replaced by its reciprocal in the conversion formula (see in detail 3-phase ac circuit analysis in Lesson-19).

Example: L.6.4 Find the equivalent inductance R_{eq} of the network (see fig.6.5(a)) at the terminals 'a' & 'b' using $Y-\Delta$ & $\Delta - Y$ transformations.

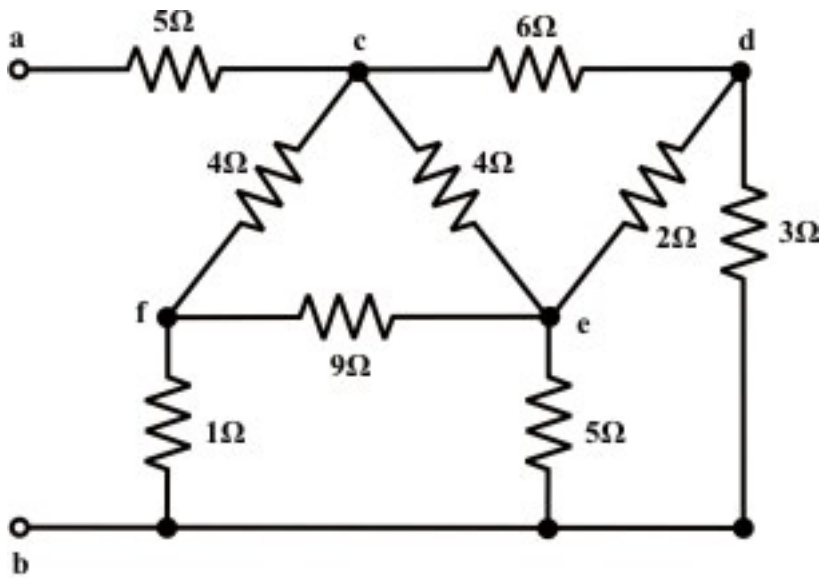

Fig. 6.5(a)

Solution: Convert the three terminals (c-d-e) Δ network (see fig.6.5(a)) comprising with the resistors to an equivalent Y-connected network using the following $\Delta - Y$ conversion formula.

$$R_{co} = \frac{6\times 4}{12} = 2\Omega;\ R_{do} = \frac{6\times 2}{12} = 1\Omega;\ \ and\ \ R_{eo} = \frac{2\times 4}{12} = 0.666\Omega$$

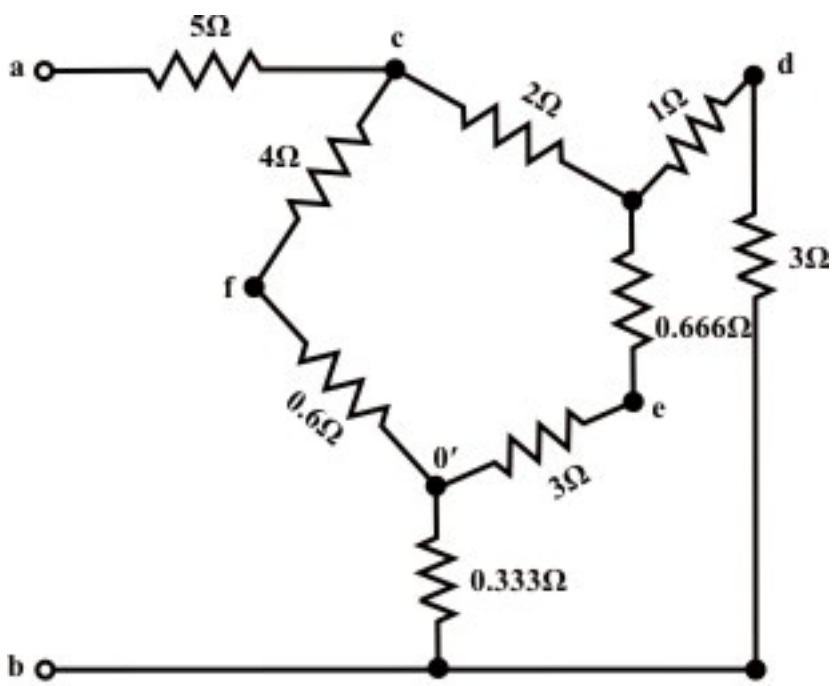

Fig. 6.5(b)

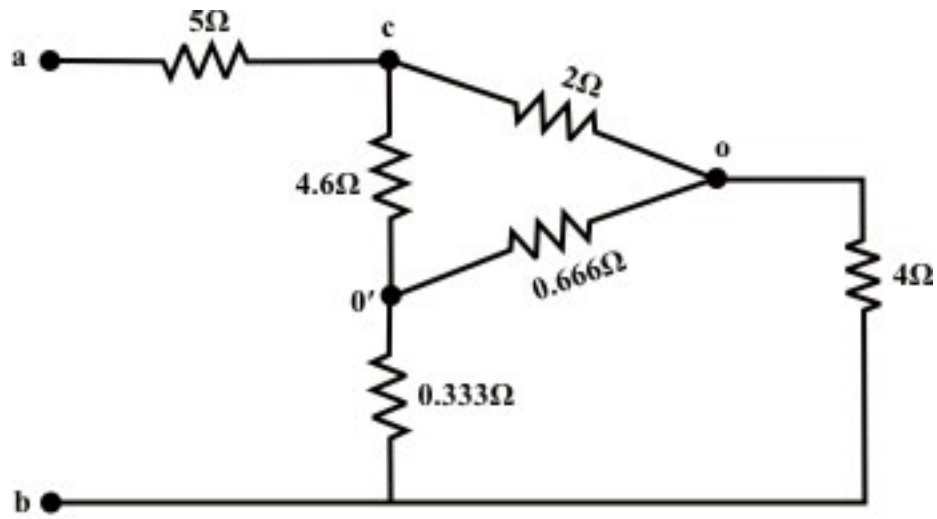

Fig. 6.5(c)

Similarly, the Δ-connected network (f-e-b) is converted to an equivalent Y-connected Network.

$$R_{fo'} = \frac{1\times 9}{15} = 0.6\Omega;\ R_{eo'} = \frac{5\times 9}{15} = 3\Omega;\ and\ R_{bo'} = \frac{1\times 5}{15} = 0.333\Omega$$

After the $\Delta - Y$ conversions, the circuit is redrawn and shown in fig.6.5(b). Next the series-parallel combinations of resistances reduces the network configuration in more simplified form and it is shown in fig.6.5(c). This circuit (see fig.6.5(c)) can further be simplified by transforming Y connected network comprising with the three resistors (2Ω, 4Ω, and 3.666Ω) to a Δ-connected network and the corresponding network parameters are given below:

$$R_{co'} = 2 + 3.666 + \frac{2\times 3.666}{4} = 7.5\Omega;\ R_{cb} = 2 + 4 + \frac{2\times 4}{3.666} = 8.18\Omega;$$

$$and\ R_{bo'} = 4 + 3.666 + \frac{4\times 3.666}{2} = 15\Omega$$

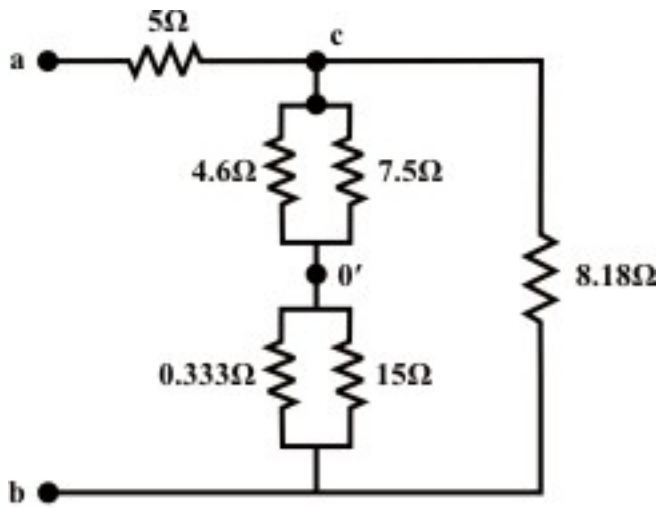

Fig. 6.5(d)

Simplified form of the circuit is drawn and shown in fig.6.5(d) and one can easily find out the equivalent resistance R_{eq} between the terminals 'a' and 'b' using the series-parallel formula. From fig.6.5(d), one can write the expression for the total equivalent resistance R_{eq} at the terminals 'a' and 'b' as

$$R_{eq} = 5 + \left[(4.6 \| 7.5) + (0.333 \| 15) \right] \| 8.18$$
$$= 5 + [2.85 + 0.272] \| 8.18 = 5 + (3.122 \| 8.18)$$
$$= 7.26\,\Omega$$

L.6.3 Test Your Understanding

[Marks: 40]

T.1 Apply $Y - \Delta$ *or* $\Delta - Y$ transformations only to find the value of the Current I that drives the circuit as shown in fig.6.6. [8]

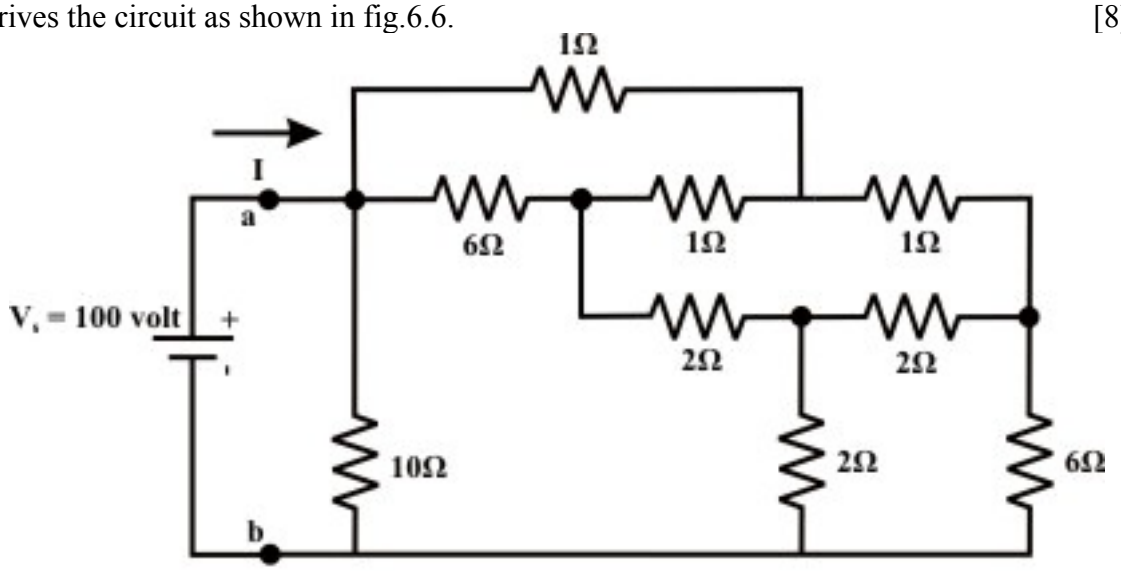

Fig. 6.6

(ans: 10.13Ω)

T.2 Find the current I through 4Ω resistor using $Y-\Delta$ or $\Delta-Y$ transformation technique only for the circuit shown in fig.6.7. [10]

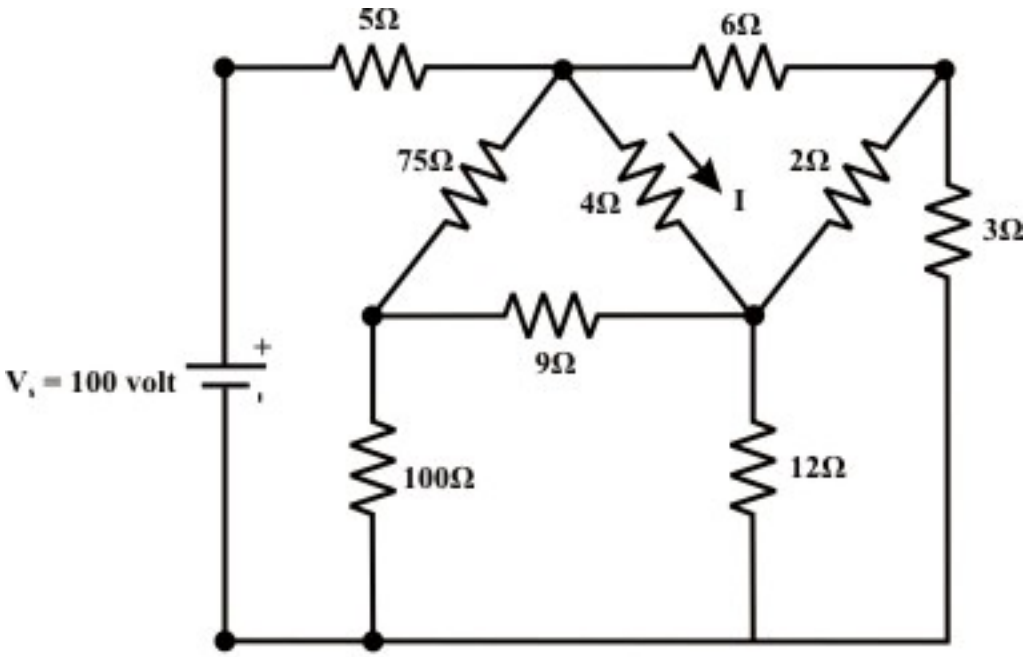

Fig. 6.7

(ans: $7.06\,A$)

T.3 For the circuit shown in fig.6.8, find R_{eq} without performing any conversion. [4]

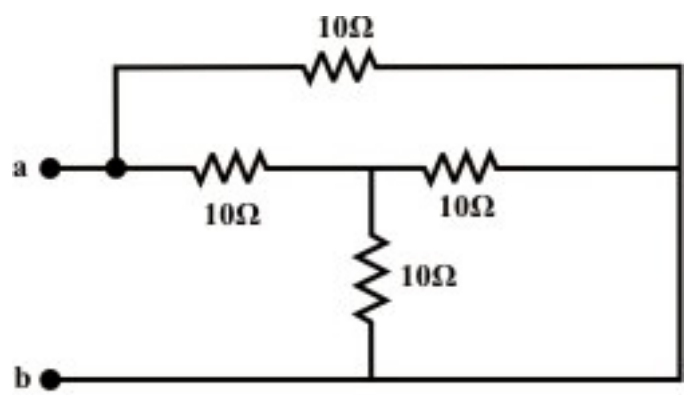

Fig. 6.8

(Ans. 6 Ω)

T.4 For the circuit shown in fig.6.9, calculate the equivalent inductance R_{eq} for each circuit and justify your answer conceptually. [6]

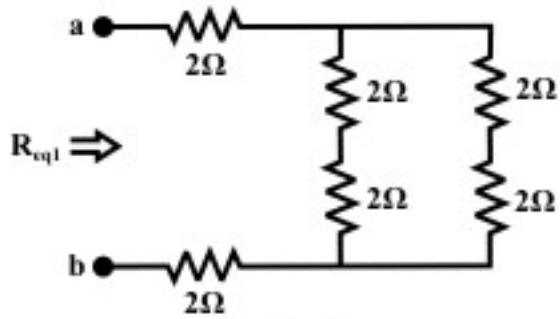

Fig. 6.9(a)

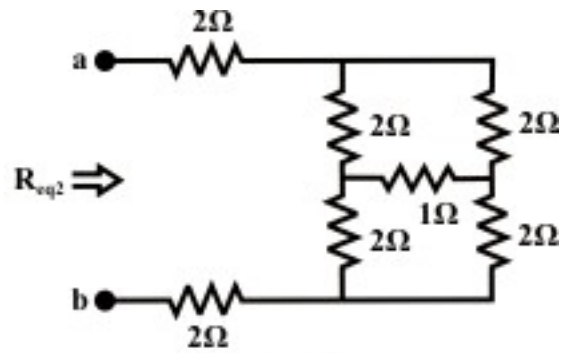

Fig. 6.9(b)

(ans. $R_{eq_1} = R_{eq_2}$)

T.5 Find the value of R_{eq} for the circuit of fig.6.10 when the switch is open and when the switch is closed. [4]

(Ans. $R_{eq} = 8.75\Omega$; $R_{eq} = 7.5\Omega$)

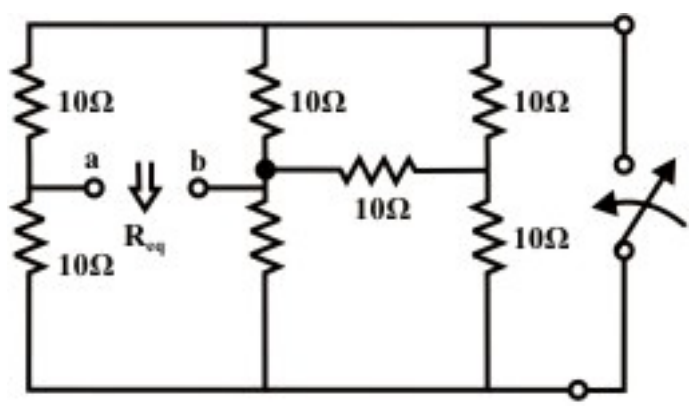

Fig. 6.10

T.6 For the circuit shown in fig.6.11, find the value of the resistance 'R' so that the equivalent capacitance between the terminals 'a' and b' is 20.57Ω. [6]

(Ans. 30Ω)

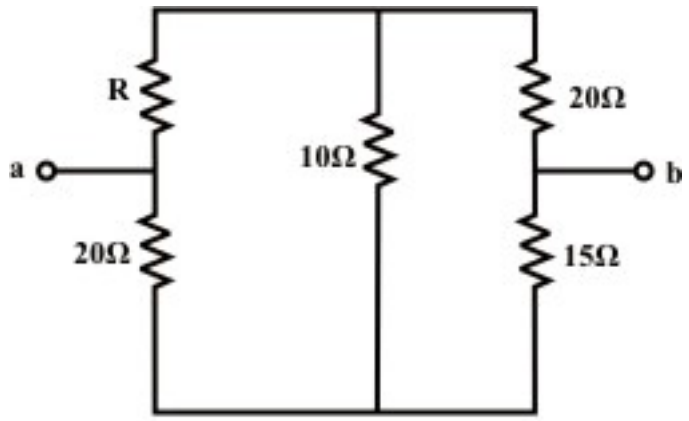

Fig. 6.11

T.7 $Y-\Delta$ *or* $\Delta-Y$ conversion is often useful in reducing the ---------- of a resistor network ---------- to the beginning nodal or mesh analysis. [1]

T.8 Is it possible to find the current through a branch or to find a voltage across the branch using $Y-\Delta/\Delta-Y$ conversions only? If so, justify your answer. [1]

Module 2

DC Circuit

Lesson 7

Superposition Theorem in the context of dc voltage and current sources acting in a resistive network

Objectives

- Statement of superposition theorem and its application to a resistive d.c network containing more than one source in order to find a current through a branch or to find a voltage across the branch.

L.7.1 Introduction

If the circuit has more than one independent (voltage and/or current) sources, one way to determine the value of variable (voltage across the resistance or current through a resistance) is to use nodal or mesh current methods as discussed in detailed in lessons 4 and 5. Alternative method for any linear network, to determine the effect of each independent source (whether voltage or current) to the value of variable (voltage across the resistance or current through a resistance) and then the total effects simple added. This approach is known as the superposition. In lesson-3, it has been discussed the properties of a linear circuit that satisfy (i) homogeneity property [response of output due to input=$\alpha u(t)$ equals to α times the response of output due to input=$u(t)$, $S(\alpha u(t))$ = $\alpha S(u(t))$ for all α; and $u(t)$= input to the system] (ii) additive property [that is the response of $u_1(t)+u_2(t)$ equals the sum of the response of $u_1(t)$ and the response of $u_2(t)$, $S(u_1(t)+u_2(t))$ = $S(u_1(t))+S(u_2(t))$]. Both additive and multiplicative properties of a linear circuit help us to analysis a complicated network. The principle of superposition can be stated based on these two properties of linear circuits.

L.7.1.1 Statement of superposition theorem

In any linear bilateral network containing two or more independent sources (voltage or current sources or combination of voltage and current sources), the resultant current / voltage in any branch is the algebraic sum of currents / voltages caused by each independent sources acting along, with all other independent sources being replaced meanwhile by their respective internal resistances.

Superposition theorem can be explained through a simple resistive network as shown in fig.7.1 and it has two independent practical voltage sources and one practical current source.

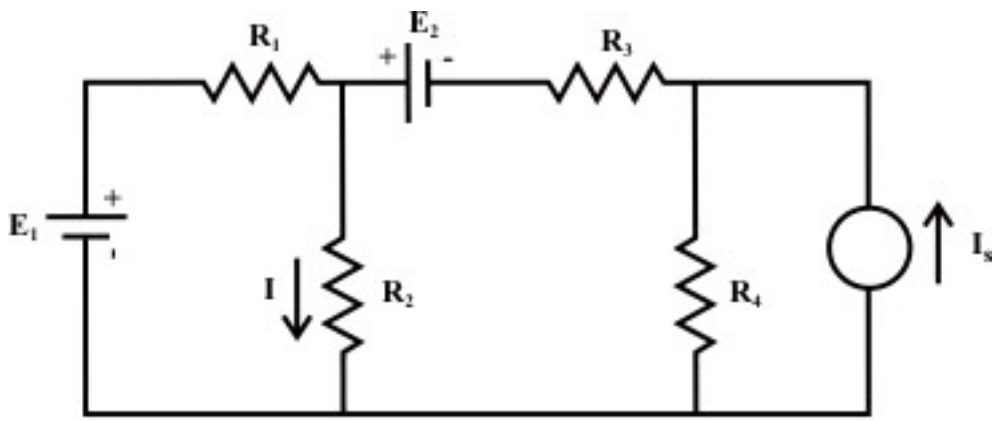

Fig. 7.1

One may consider the resistances R_1 *and* R_3 are the internal resistances of the voltage sources whereas the resistance R_4 is considered as internal resistance of the current source. The problem is to determine the response I in the in the resistor R_2. The current I can be obtained from

$$I = I'|_{due\ to\ E_1\ (alone)} + I''|_{due\ to\ E_2\ (alone)} + I'''|_{due\ to\ I_s\ (alone)}$$

according to the application of the superposition theorem. It may be noted that each independent source is considered at a time while all other sources are turned off or killed. To kill a voltage source means the voltage source is replaced by its internal resistance (i.e. R_1 or R_3; in other words E_1 *or* E_2 should be replaced temporarily by a short circuit) whereas to kill a current source means to replace the current source by its internal resistance (i.e. R_4; in other words I_s should be replaced temporarily by an open circuit).

Remarks: Superposition theorem is most often used when it is necessary to determine the individual contribution of each source to a particular response.

L.7.1.2 Procedure for using the superposition theorem

Step-1: Retain one source at a time in the circuit and replace all other sources with their internal resistances.

Step-2: Determine the output (current or voltage) due to the single source acting alone using the techniques discussed in lessons 3 and 4.

Step-3: Repeat steps 1 and 2 for each of the other independent sources.

Step-4: Find the total contribution by adding algebraically all the contributions due to the independent sources.

L.7.2 Application of superposition theorem

Example- L.7.1 Consider the network shown in fig. 7.2(a). Calculate I_{ab} *and* V_{cg} using superposition theorem.

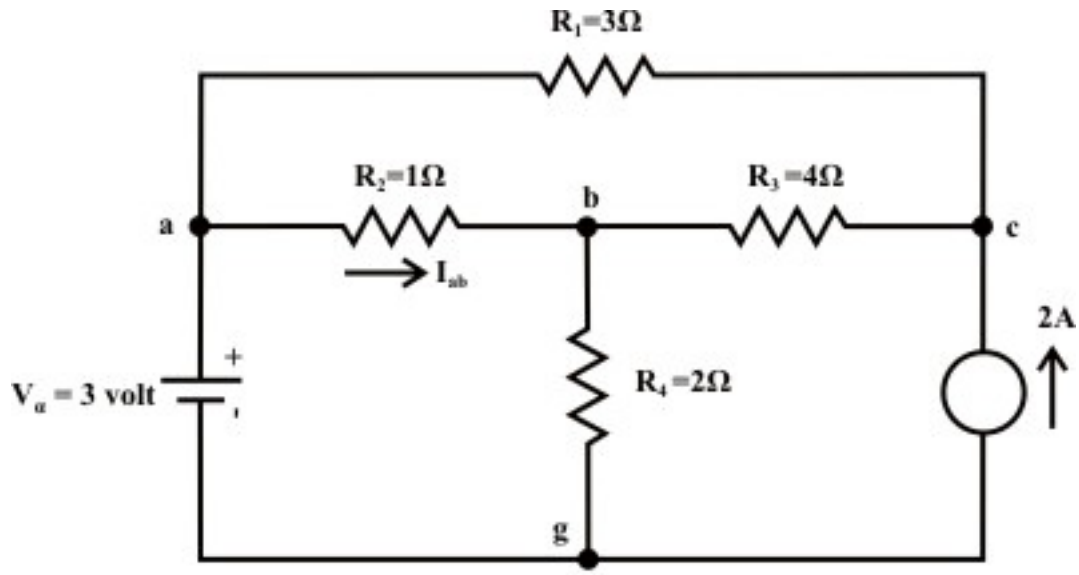

Fig. 7.2(a)

Solution: Voltage Source Only (retain one source at a time):

First consider the voltage source V_a that acts only in the circuit and the current source is replaced by its internal resistance (in this case internal resistance is infinite (∞)). The corresponding circuit diagram is shown in fig.7.2(b) and calculate the current flowing through the 'a-b' branch.

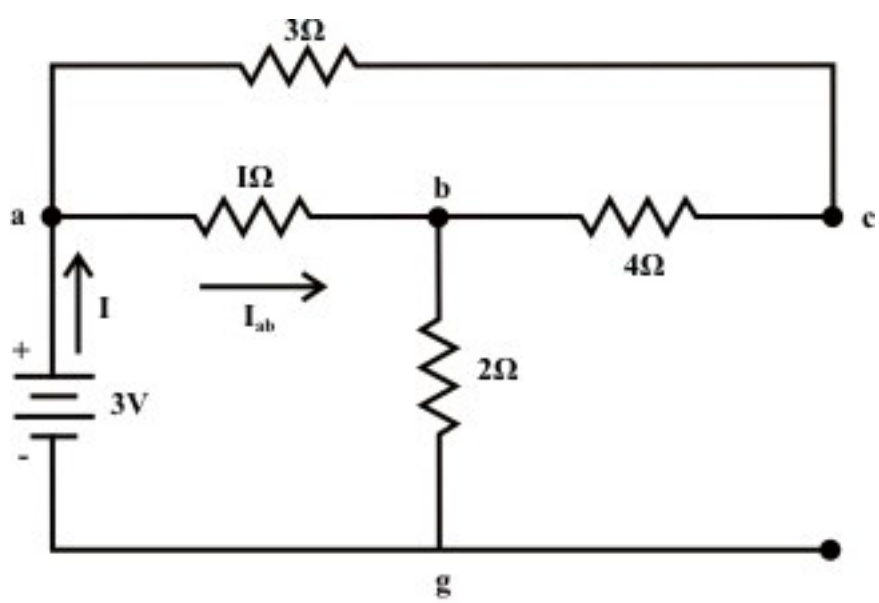

Fig. 7.2(b)

$$R_{eq} = [(R_{ac} + R_{cb}) \| \ R_{ab}] + R_{bg} = \frac{7}{8} + 2 = \frac{23}{8}\Omega$$

$I = \dfrac{3}{\frac{23}{8}} A = 1.043A;$ Now current through a to b, is given by

$$\mathrm{I_{ab}} = \frac{7}{8} \times \frac{24}{23} = 0.913\mathrm{A} \text{ (a to b)}$$

$$I_{acb} = 1.043 - 0.913 = 0.13A$$

Voltage across c-g terminal :

$V_{cg} = V_{bg} + V_{cb} = 2 \times 1.043 + 4 \times 0.13 = 2.61 volts$ (Note: we are moving opposite to the direction of current flow and this indicates there is rise in potential). Note 'c' is higher potential than 'g'.

Current source only (retain one source at a time):
Now consider the current source $I_s = 2\,A$ only and the voltage source V_a is replaced by its internal resistance which is zero in the present case. The corresponding the simplified circuit diagram is shown below (see fig.7.2(c)& fig.7.2(d)).

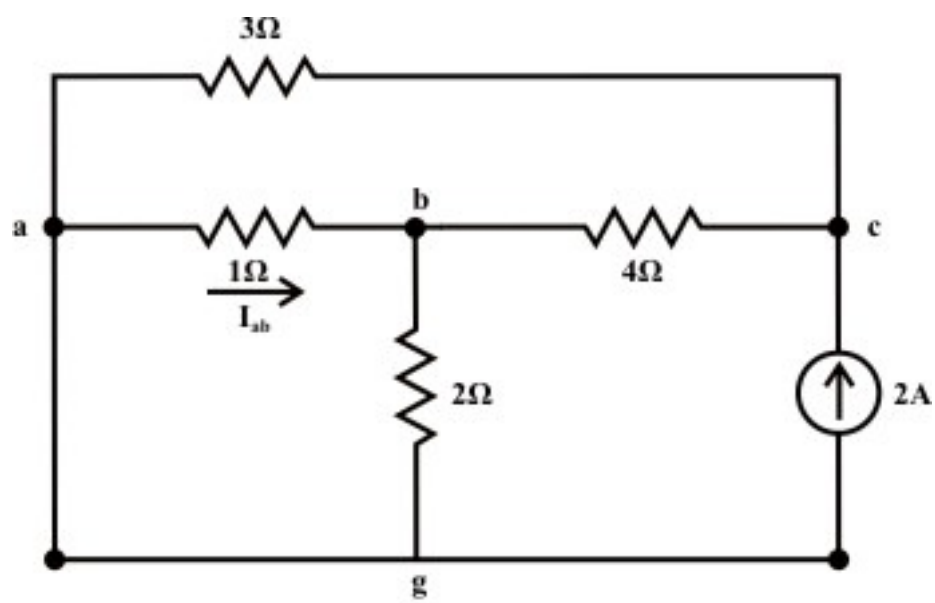

Fig. 7.2(c)

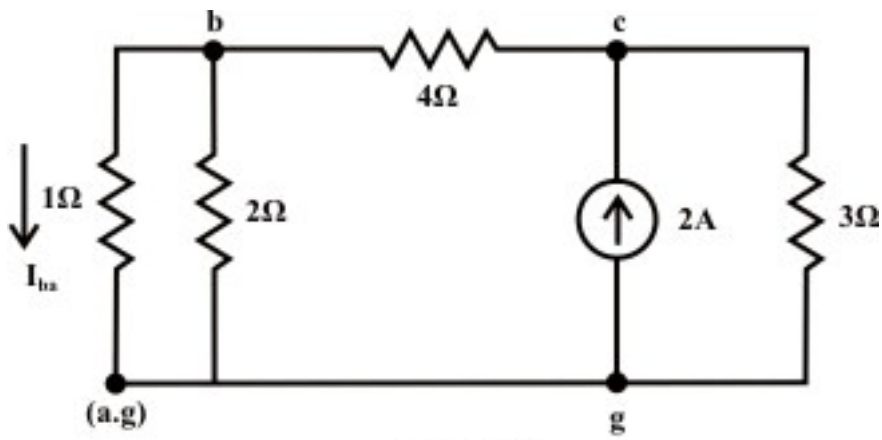

Fig. 7.2(d)

Current in the following branches:

$3\Omega\, resistor = \dfrac{(14/3)\times 2}{(14/3)+3} = 1.217A$; $\quad 4\Omega\, resistor = 2 - 1.217 = 0.783A$

$1\Omega\ resistor = \left(\dfrac{2}{3}\right)\times 0.783 = 0.522\,A\ (b\ to\ a)$

Voltage across 3Ω resistor (c & g terminals) $V_{cg} = 1.217\times 3 = 3.651\, volts$

The total current flowing through 1Ω resistor (due to the both sources) from a to b = 0.913 (due to voltage source only; current flowing from 'a' to 'b') – 0.522 (due to current source only; current flowing from 'b' to 'a') $= 0.391\,A$.

Total voltage across the current source $V_{cg} = 2.61\, volt$ (due to voltage source ; 'c' is higher potential than 'g') + 3.651 $volt$ (due to current source only; 'c' is higher potential than 'g') $= 6.26\, volt$.

Example L.7.2 For the circuit shown in fig.7.3(a), the value of V_{s1} *and* I_s are fixed. When $V_{s2} = 0$, the current $I = 4\,A$. Find the value of I when $V_{s2} = 32V$.

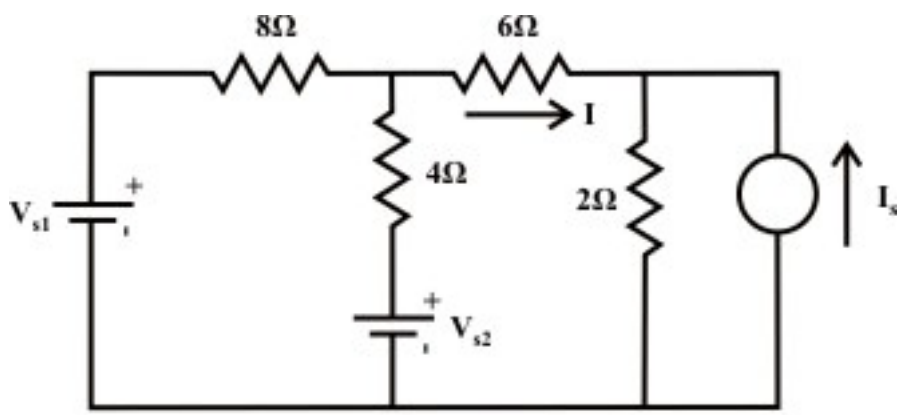

Fig. 7.3(a)

Solution: Let us assume that the current flowing 6Ω resistors due to the voltage and current sources are given by (assume circuit linearity)

$$I = \alpha V_{s1} + \beta V_{s2} + \eta I_s = I'_{(due\ to\ V_{s1})} + I''_{(due\ to\ V_{s2})} + I'''_{(due\ to\ I_s)} \tag{7.1}$$

where the parameters α, β, *and* η represent the positive constant numbers. The parameters α *and* β are the total conductance of the circuit when each voltage source acting alone in the circuit and the remaining sources are replaced by their internal resistances. On the other hand, the parameter η represents the total resistance of the circuit when the current source acting alone in the circuit and the remaining voltage sources are replaced by their internal resistances. The expression (7.1) for current I is basically written from the concept of superposition theorem.

From the first condition of the problem statement one can write an expression as (when the voltage source V_{s1} and the current source I_s acting jointly in the circuit and the other voltage source V_{s2} is not present in the circuit.)

$$4 = I = \alpha V_{s1} + \eta I_s = I'_{(due\ to\ V_{s1})} + I'''_{(due\ to\ I_s)} \text{ (Note both the sources are fixed)} \tag{7.2}$$

Let us assume the current following through the 6Ω resistor when all the sources acting in the circuit with $V_{s2} = 32V$ is given by the expression (7.1). Now, one can determine the current following through 6Ω resistor when the voltage source $V_{s2} = 32V$ acting alone in the circuit and the other sources are replaced by their internal resistances. For the circuit shown in fig.7.3 (b), the current delivered by the voltage source to the 6Ω resistor is given by

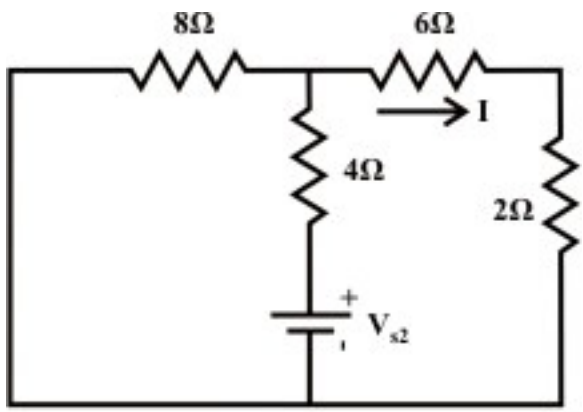

Fig. 7.3(b)

$$I_1 = \frac{V_{S2}}{R_{eq}} = \frac{32}{(8 \| 8) + 4} = 4\,A \tag{7.3}$$

The current following through the 6Ω due to the voltage source $V_{S2} = 32V$ only is $2\,A$ (flowing from left to right; i,e. in the direction as indicated in the figure 7.3(b)). Using equation (7.1), the total current I flowing the 6Ω resistor can be obtained as

$$I = \alpha V_{s1} + \beta V_{s2} + \eta I_s = I'_{(due\ to\ V_{s1})} + I''_{(due\ to\ V_{s2})} + I'''_{(due\ to\ I_s)} = \left[I'_{(due\ to\ V_{s1})} + I'''_{(due\ to\ I_s)} \right] + I''_{(due\ to\ V_{s2})}$$

$$= 4\,A + 2A = 6A \text{ (note: } I'_{(due\ to\ V_{s1})} + I'''_{(due\ to\ I_s)} = 4\,A \text{ (see eq. 7.2)}$$

Example L.7.3: Calculate the current I_{ab} flowing through the resistor 3Ω as shown in fig.7.4(a), using the superposition theorem.

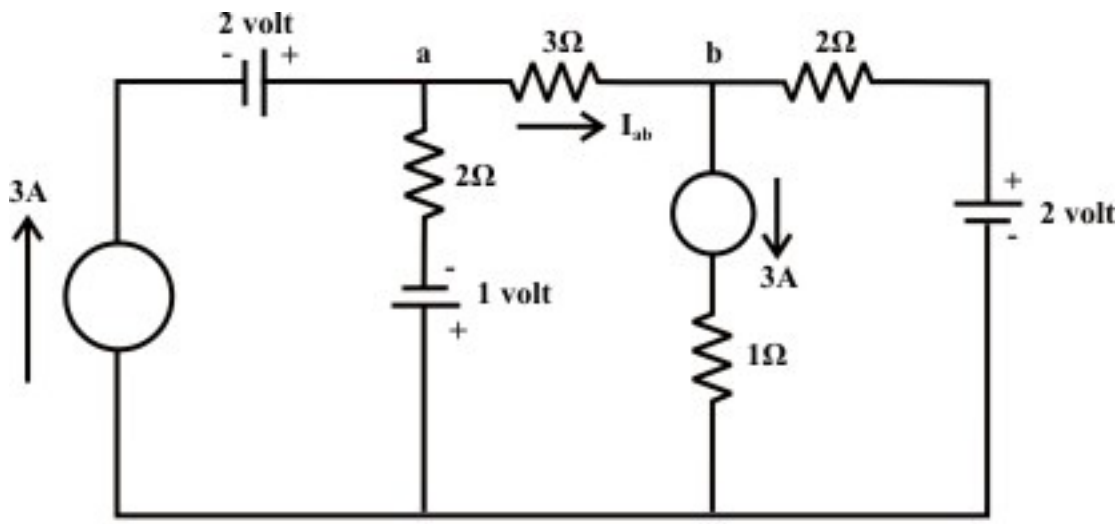

Fig. 7.4 (a)

Solution: Assume that the current source $3\,A$(left to the $1\,volt$ source) is acting alone in the circuit and the internal resistances replace the other sources. The current flowing through 3Ω resistor can be obtained from fig.7.4(b)

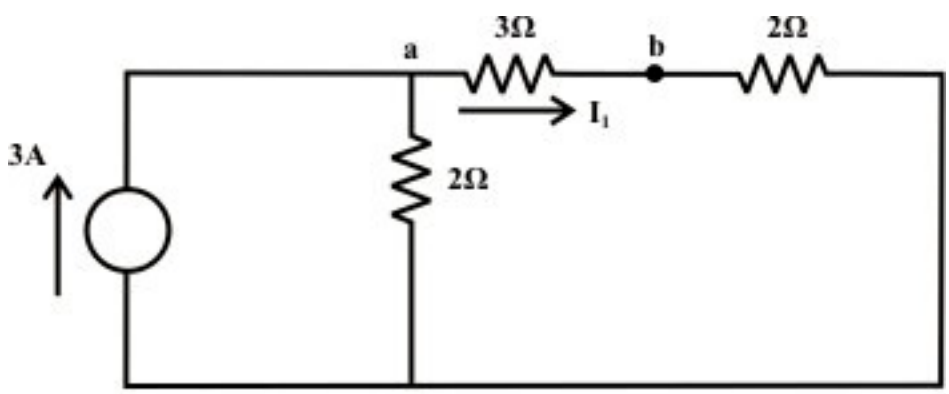

Fig. 7.4 (b)

and it is given by

$$I_{1(due\ to\ 3A\ current\ source)} = 3 \times \frac{2}{7} = \frac{6}{7} A(a\ to\ b) \tag{7.4}$$

Current flowing through 3Ω resistor **due to** $2V$ **source (only)** can be obtained from fig.7.4(c)

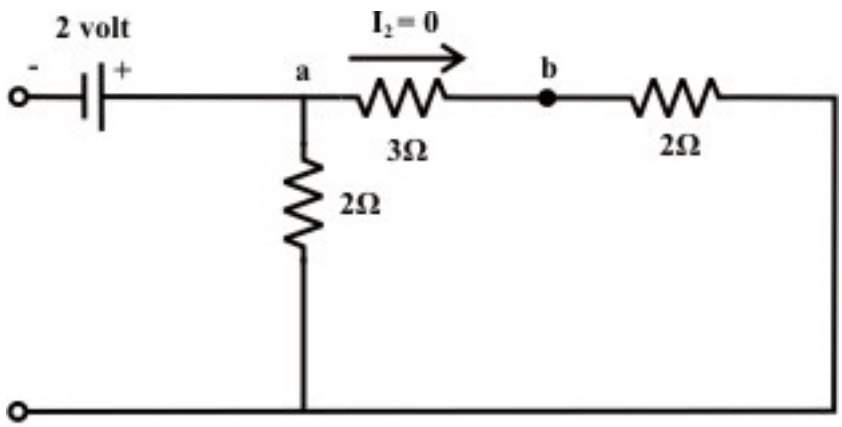

Fig. 7.4 (c)

and it is seen from no current is flowing.

$$I_{2(due\ to\ 2V\ \ voltage\ source)} = 0\,A(a\ to\ b) \tag{7.5}$$

Current through 3Ω resistor **due to** $1V$ **voltage source only** (see fig.7.3(d)) is given by

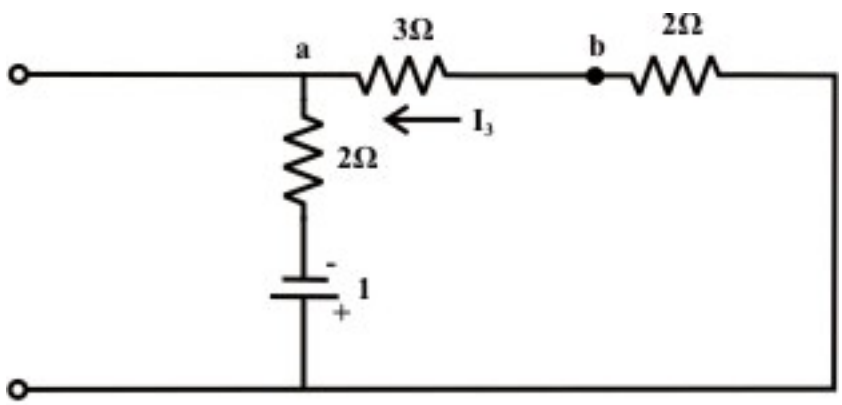

Fig. 7.4 (d)

$$I_{3(due\ to\ 1V\ \ voltage\ source)} = \frac{1}{7}A(b\ to\ a) \tag{7.6}$$

Current through 3Ω resistor **due to** $3A$ **current source only** (see fig.7.3(e)) is obtained by

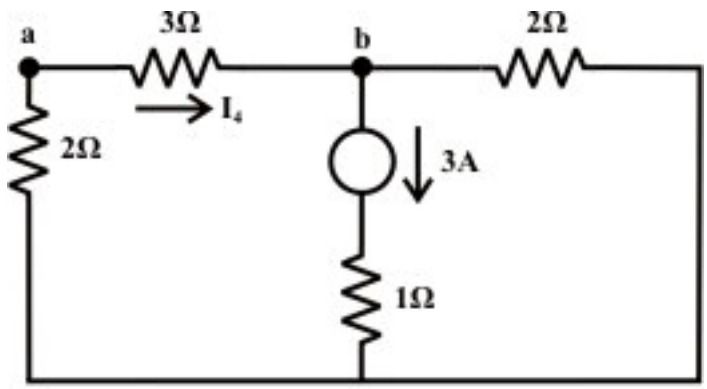

Fig. 7.4 (e)

$$I_{4(due\ to\ 3A\ current\ source)} = 3 \times \frac{2}{7} = \frac{6}{7} A(a\ to\ b) \tag{7.7}$$

Current through 3Ω resistor **due to** $2V$ **voltage source only** (see fig.7.3(f)) is given by

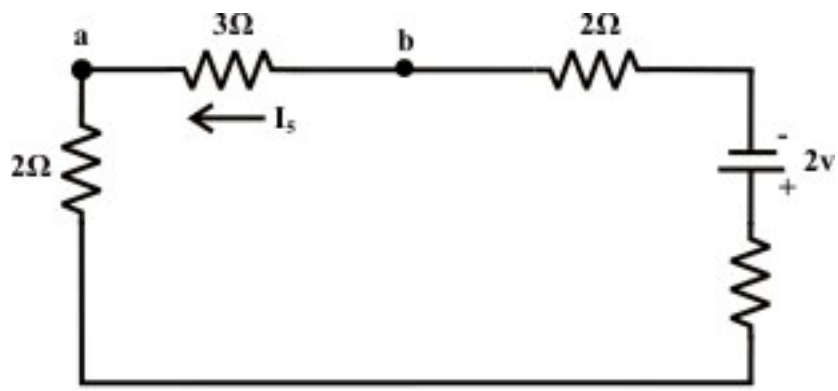

Fig. 7.4 (f)

$$I_{5(due\ to\ 2V\ \ voltage\ source)} = \frac{2}{7} A(b\ to\ a) \tag{7.8}$$

Resultant current I_{ab} flowing through 3Ω resistor due to the combination of all sources is obtained by the following expression (the algebraic sum of all currents obtained in eqs. (7.4)-(7.8) with proper direction of currents)

$$I_{ab} = I_{1(due\ to\ 3A\ current\ source)} + I_{2(due\ to\ 2V\ \ voltage\ source)} + I_{3(due\ to\ 1V\ \ voltage\ source)} + I_{4(due\ to\ 3A\ current\ source)}$$
$$+ I_{5(due\ to\ 2V\ \ voltage\ source)}$$
$$= \frac{6}{7} + 0 - \frac{1}{7} + \frac{6}{7} - \frac{2}{7} = \frac{9}{7} = 1.285(a\ to\ b)$$

L.7.3 Limitations of superposition Theorem

- Superposition theorem doesn't work for power calculation. Because **power calculations** involve either the product of voltage and current, the square of current or the square of the voltage, they are not linear operations. This statement can be explained with a simple example as given below.

Example: Consider the circuit diagram as shown in fig.7.5.

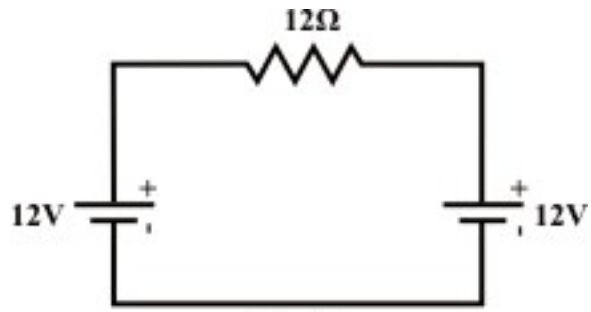

Fig. 7.5

Using superposition theorem one can find the resultant current flowing through 12Ω resistor is zero and consequently power consumed by the resistor is also zero. For power consumed in an any resistive element of a network can not be computed using superposition theorem. Note that the power consumed by each individual source is given by

$P_{W1(due\ to\ 12V\ source(left))} = 12\ watts;\ P_{W2(due\ to\ 12V\ source(right))} = 12\ watts$

The total power consumed by $12\ \Omega = 24\,watts$ (applying superposition theorem). This result is wrong conceptually. In fact, we may use the superposition theorem to find a current in any branch or a voltage across any branch, from which power is then can be calculated.

- Superposition theorem can not be applied for non linear circuit (Diodes or Transistors).
- This method has weaknesses:- In order to calculate load current I_L or the load voltage V_L for the several choices of load resistance R_L of the resistive network , one needs to solve for every source voltage and current, perhaps several times. With the simple circuit, this is fairly easy but in a large circuit this method becomes an painful experience.

L.7.4 Test Your Understanding [Marks: 40]

T.7.1 When using the superposition theorem, to find the current produced independently by one voltage source, the other voltage source(s) must be ---------- and the current source(s) must be ----------. [2]

T.7.2 For a linear circuit with independent sources p_1, p_2, $p_3 \ldots\ldots\ldots p_n$ and if y_i is the response of the circuit to source p_i, with all other independent sources set to zero), then resultant response $y = \cdots\cdots\cdots$. [1]

T.7.3 Use superposition theorem to find the value of the voltage v_a in fig.7.6. [8]

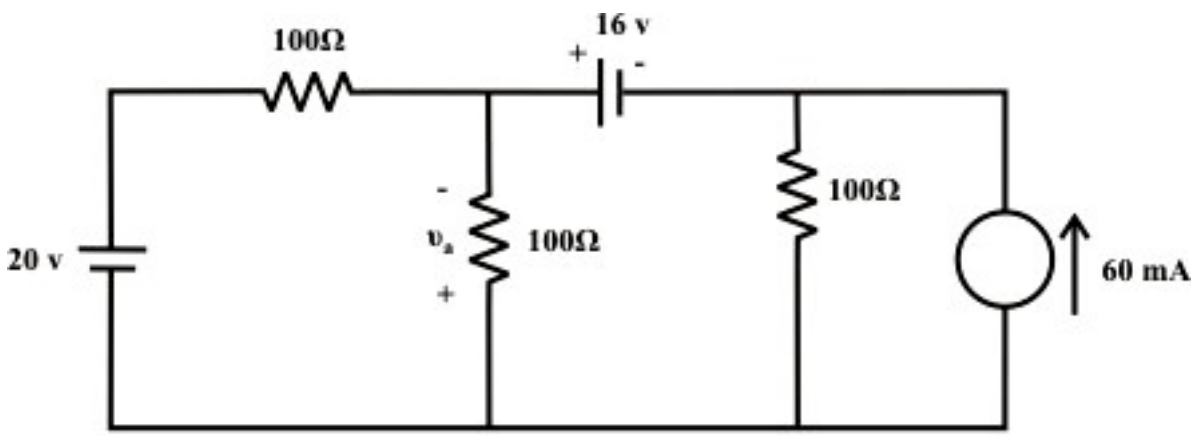

Fig. 7.6

(Ans. $14\,volts$)

T.7.4 For the circuit shown in fig.7.7, calculate the value of source current I_x that yields $I = 0$ if V_A *and* V_C are kept fixed at $7V$ *and* $28V$. [7]

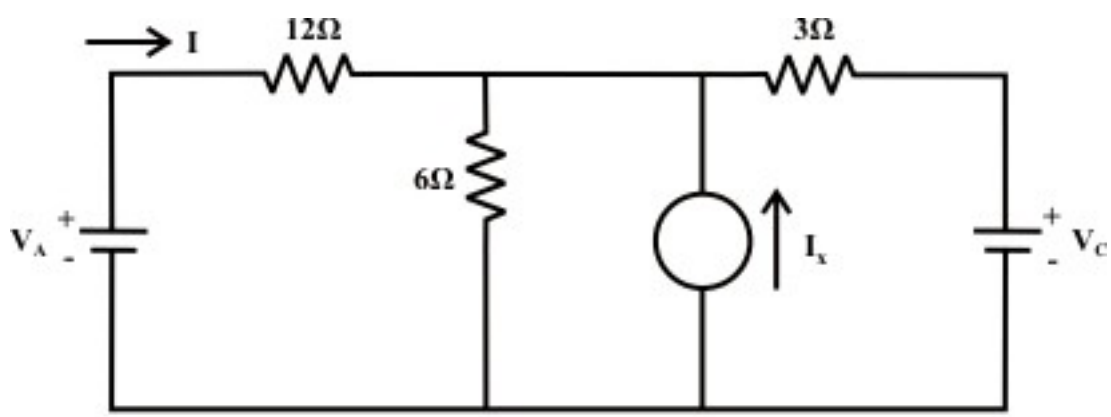

Fig. 7.7

(Ans. $I_x = -5.833\,A$)

T.7.5 For the circuit shown below (see fig.7.8), it follows from linearly that we can write $V_{ab} = \alpha I_x + \beta V_A + \eta V_B$, *where* α, β, *and* η *are* constants. Find the values of (i) $(i)\,\alpha$ (ii) β *and* (iii) η. [7]

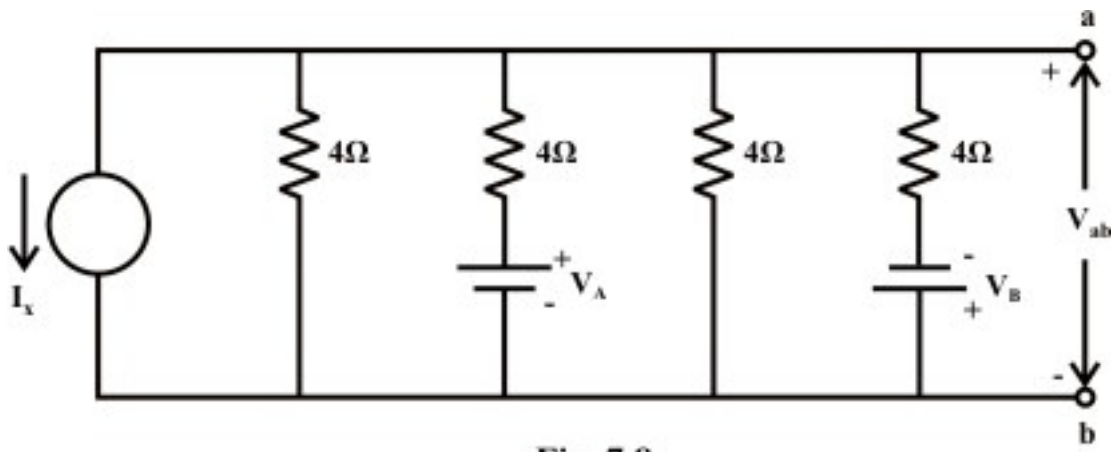

Fig. 7.8

(Ans. $\alpha = -1$; $\beta = 0.063$; *and* $\eta = -0.063$)

T.7.6 Using superposition theorem, find the current i through $5\,\Omega$ resistor as shown in fig.7.9. [8]

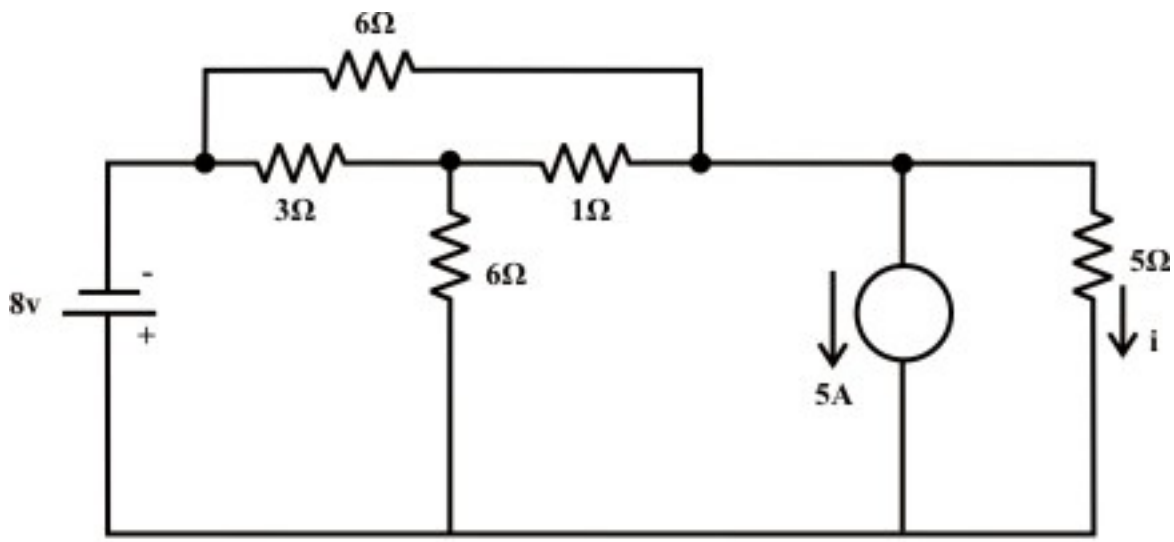

Fig. 7.9

(Ans. $-0.538\,A$)

T.7.7 Consider the circuit of fig.7.10

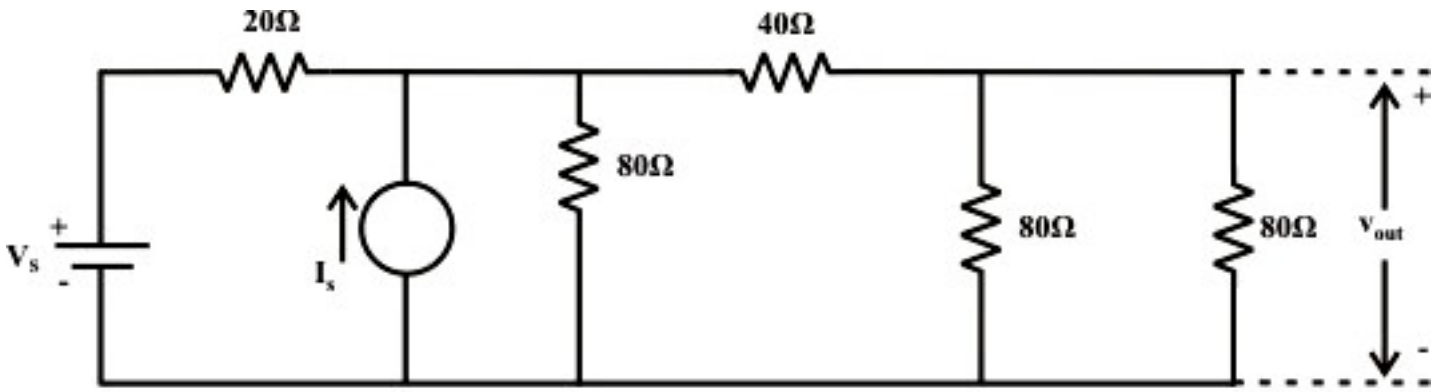

Fig. 7.10

(a) Find the linear relationship between V_{out} and input sources V_s *and* I_s

(b) If $V_s = 10V$ *and* $I_s = 1$, *find* V_{out}

(c) What is the effect of doubling all resistance values on the coefficients of the linear relationship found in part (a)? [7]

(Ans. (a) $V_{out} = 0.3333V_s + 6.666I_s$; (b) $V_{out} = 9.999V$ (c) $V_{out} = 0.3333V_s + 13.332I_s$)

Module 2

DC Circuit

Lesson 8

Thevenin's and Norton's theorems in the context of dc voltage and current sources acting in a resistive network

Objectives

- To understand the basic philosophy behind the Thevenin's theorem and its application to solve dc circuits.
- Explain the advantage of Thevenin's theorem over conventional circuit reduction techniques in situations where load changes.
- Maximum power transfer theorem and power transfer efficiency.
- Use Norton's theorem for analysis of dc circuits and study the advantage of this theorem over conventional circuit reduction techniques in situations where load changes.

L.8.1 Introduction

A simple circuit as shown in fig.8.1 is considered to illustrate the concept of equivalent circuit and it is always possible to view even a very complicated circuit in terms of much simpler equivalent source and load circuits. Subsequently the reduction of computational complexity that involves in solving the current through a branch for different values of load resistance (R_L) is also discussed. In many applications, a network may contain a variable component or element while other elements in the circuit are kept constant. If the solution for current (I) or voltage (V) or power (P) in any component of network is desired, in such cases the whole circuit need to be analyzed each time with the change in component value. In order to avoid such repeated computation, it is desirable to introduce a method that will not have to be repeated for each value of variable component. Such tedious computation burden can be avoided provided the fixed part of such networks could be converted into a very simple equivalent circuit that represents either in the form of practical voltage source known as Thevenin's voltage source ($V_{Th} = magnitude\ of\ voltage\ source$, $R_{Th} = internal\ \ resistance\ of\ the\ source$) or in the form of practical current source known as Norton's current source ($I_N = magnitude\ of\ current\ source$, $R_N = internal\ \ resistance\ of\ current\ source$). In true sense, this conversion will considerably simplify the analysis while the load resistance changes. Although the conversion technique accomplishes the same goal, it has certain advantages over the techniques that we have learnt in earlier lessons.

Let us consider the circuit shown in fig. 8.1(a). Our problem is to find a current through R_L using different techniques; the following observations are made.

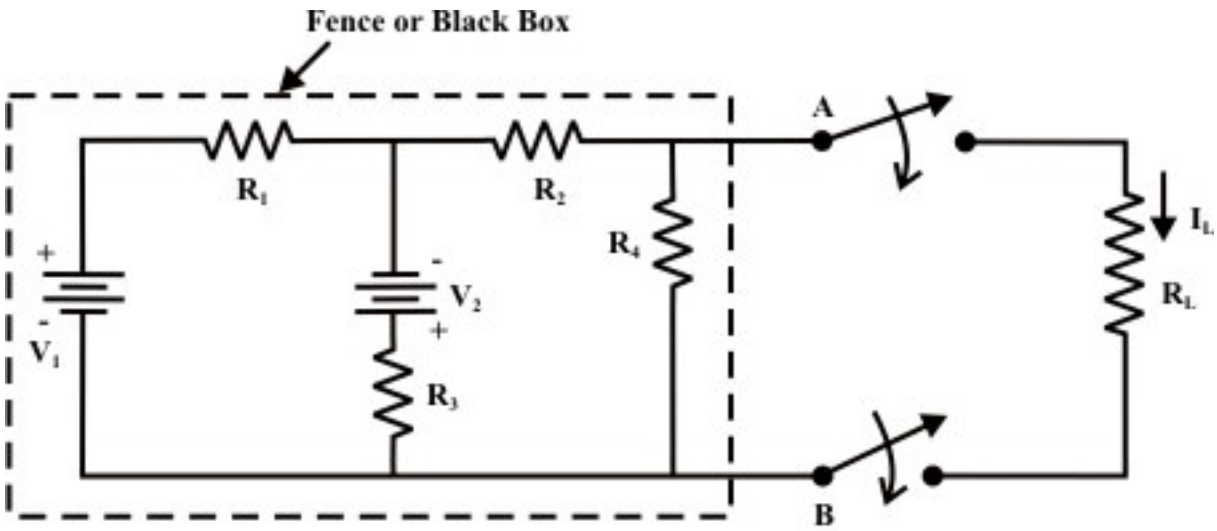

Fig. 8.1(a): A simple dc network

Find

- Mesh current method needs 3 equations to be solved
- Node voltage method requires 2 equations to be solved
- Superposition method requires a complete solution through load resistance (R_L) by considering each independent source at a time and replacing other sources by their internal source resistances.

Suppose, if the value of R_L is changed then the three (mesh current method) or two equations (node voltage method) need to be solved again to find the new current in R_L. Similarly, in case of superposition theorem each time the load resistance R_L is changed, the entire circuit has to be analyzed all over again. Much of the tedious mathematical work can be avoided if the fixed part of circuit (fig. 8.1(a)) or in other words, the circuit contained inside the imaginary fence or black box with two terminals A & B, is replaced by the simple equivalent voltage source (as shown in fig. 8.1(b)) or current source (as shown in fig.8.1(c)).

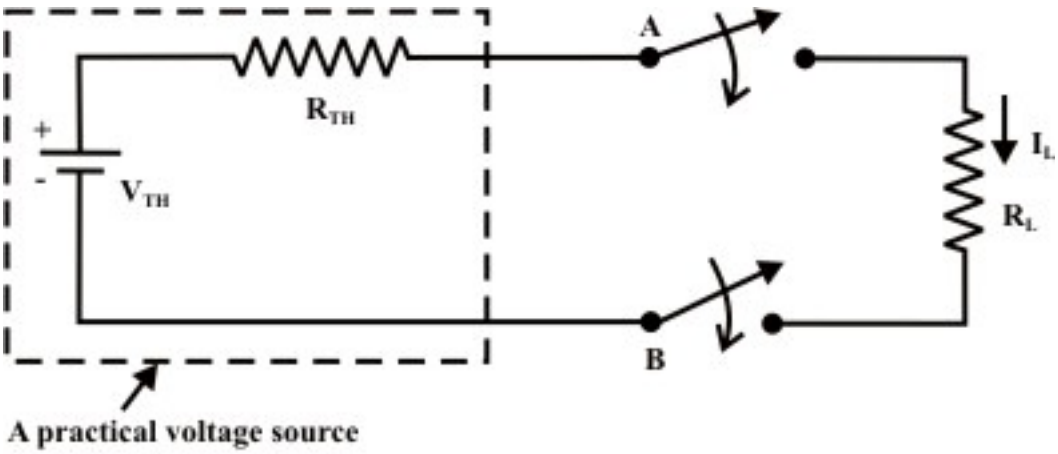

Fig. 8.1(b): circuit 8.1(a) is equivalently replaced by a simple practical voltage source

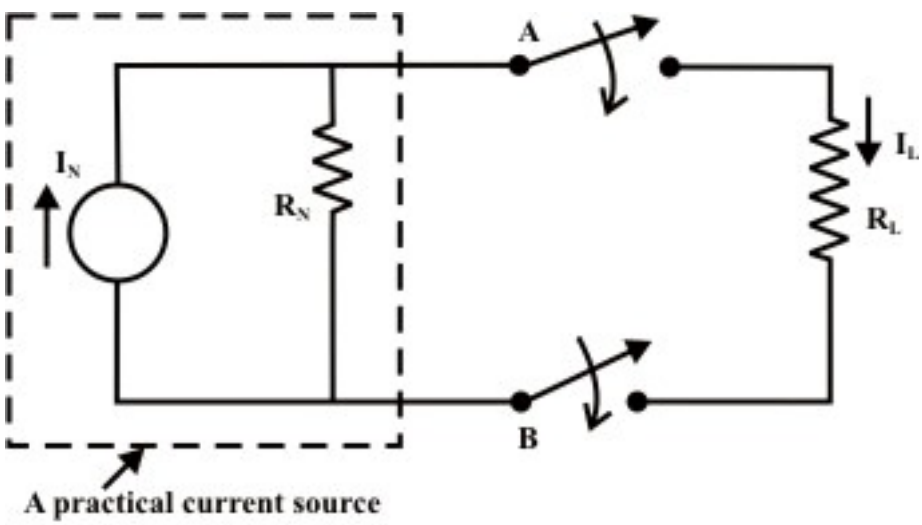

Fig. 8.1(c): Circuit 8.1(a) is equivalently replaced by a simple practical current source

Thevenin's Theorem: Thevenin's theorem states that any two output terminals (A & B, shown in fig. 8.2.(a)) of an active linear network containing independent sources (it includes voltage and current sources) can be replaced by a simple voltage source of magnitude V_{Th} in series with a single resistor R_{Th} (see fig. 8.2(d)) where R_{Th} is the equivalent resistance of the network when looking from the output terminals A & B with all sources (voltage and current) removed and replaced by their internal resistances (see fig. 8.2(c)) and the magnitude of V_{Th} is equal to the open circuit voltage across the A & B terminals. (The proof of the theorem will be given in section- L8. 5).

L.8.2 The procedure for applying Thevenin's theorem

To find a current I_L through the load resistance R_L (as shown in fig. 8.2(a)) using Thevenin's theorem, the following steps are followed:

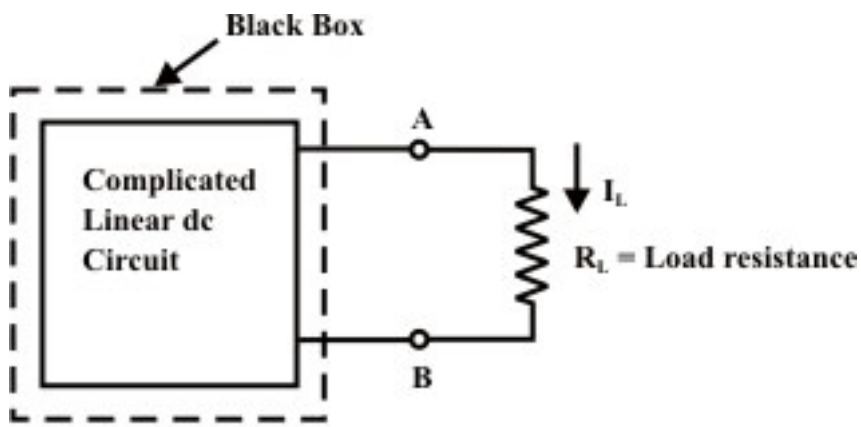

Fig. 8.2(a)

Step-1: Disconnect the load resistance (R_L) from the circuit, as indicated in fig. 8.2(b).

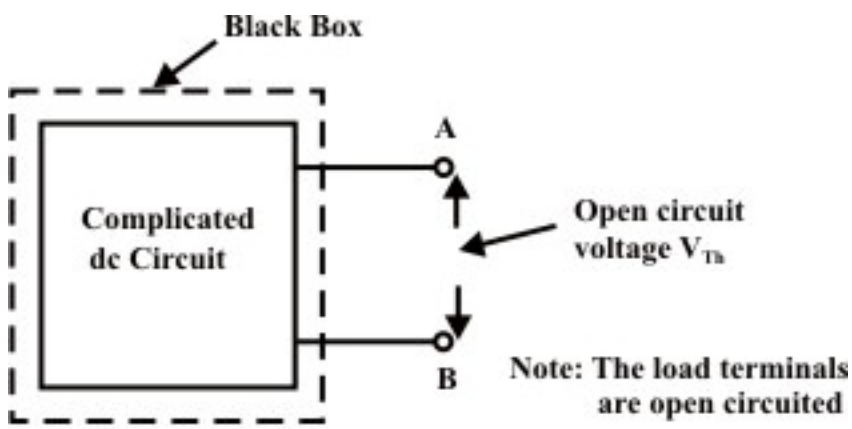

Fig. 8.2(b)

Step-2: Calculate the open-circuit voltage V_{TH} (shown in fig.8.2(b)) at the load terminals ($A \& B$) after disconnecting the load resistance (R_L). In general, one can apply any of the techniques (mesh-current, node-voltage and superposition method) learnt in earlier lessons to compute V_{Th} (experimentally just measure the voltage across the load terminals using a voltmeter).

Step-3: Redraw the circuit (fig. 8.2(b)) with each practical source replaced by its internal resistance as shown in fig.8.2(c). (note, voltage sources should be short-circuited (just remove them and replace with plain wire) and current sources should be open-circuited (just removed).

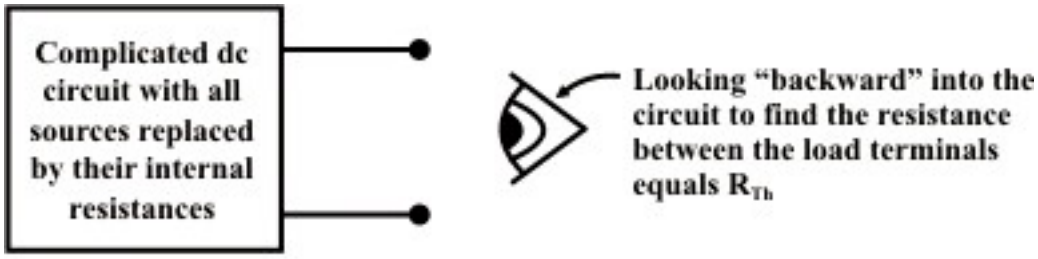

Fig. 8.2(c)

Step-4: Look backward into the resulting circuit from the load terminals ($A \& B$) , as suggested by the eye in fig.L.8.2(c). Calculate the resistance that would exist between the load terminals (or equivalently one can think as if a voltage source is applied across the load terminals and then trace the current distribution through the circuit (fig.8.2 (c)) in order to calculate the resistance across the load terminals.) The resistance R_{Th} is described in the statement of Thevenin's theorem. Once again, calculating this resistance may be a difficult task but one can try to use the standard circuit reduction technique or $Y-\Delta$ *or* $\Delta - Y$ transformation techniques.

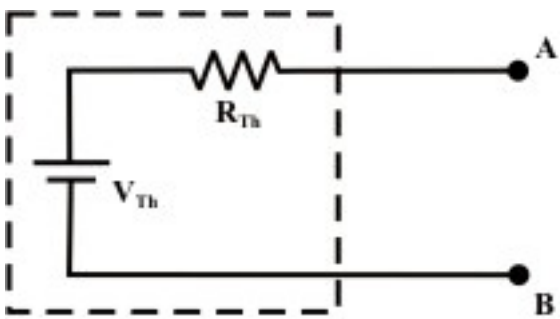

Fig. 8.2(d): Dash-portion of the circuit (Fig. 8.2(a)) is equivalently replaced by a practical voltage source.

Step-5: Place R_{Th} in series with V_{Th} to form the Thevenin's equivalent circuit (replacing the imaginary fencing portion or fixed part of the circuit with an equivalent practical voltage source) as shown in fig. 8.2(d).

Step-6: Reconnect the original load to the Thevenin voltage circuit as shown in fig.8.2(e); the load's voltage, current and power may be calculated by a simple arithmetic operation only.

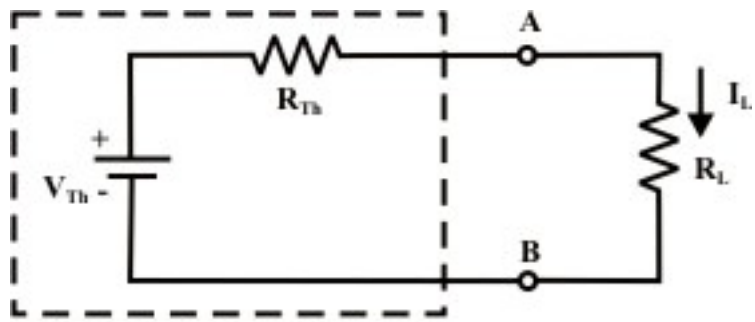

Fig. 8.2(e)

Load current $I_L = \dfrac{V_{Th}}{R_{Th} + R_L}$ (8.1)

Voltage across the load $V_L = \dfrac{V_{Th}}{R_{Th} + R_L} \times R_L = I_L \times R_L$ (8.2)

Power absorbed by the load $P_L = I_L^{\,2} \times R_L$ (8.3)

Remarks: (i) One great advantage of Thevenin's theorem over the normal circuit reduction technique or any other technique is this: once the Thevenin equivalent circuit has been formed, it can be reused in calculating load current (I_L), load voltage (V_L) and load power (P_L) for different loads using the equations (8.1)-(8.3).

(ii) Fortunately, with help of this theorem one can find the choice of load resistance R_L that results in the maximum power transfer to the load. On the other hand, the effort necessary to solve this problem-using node or mesh analysis methods can be quite complex and tedious from computational point of view.

L.8.3 Application of Thevenin's theorem

Example: L.8.1 For the circuit shown in fig.8.3(a), find the current through $R_L = R_2 = 1\Omega$ resistor (I_{a-b} branch) using Thevenin's theorem & hence calculate the voltage across the current source (V_{cg}).

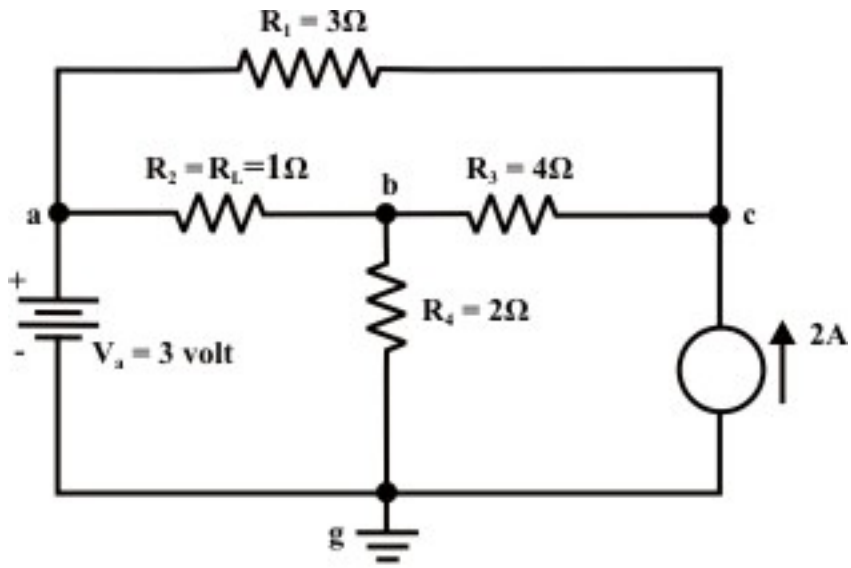

Fig. 8.3(a)

Solution:

Step-1: Disconnect the load resistance R_L and redraw the circuit as shown in fig.8.3(b).

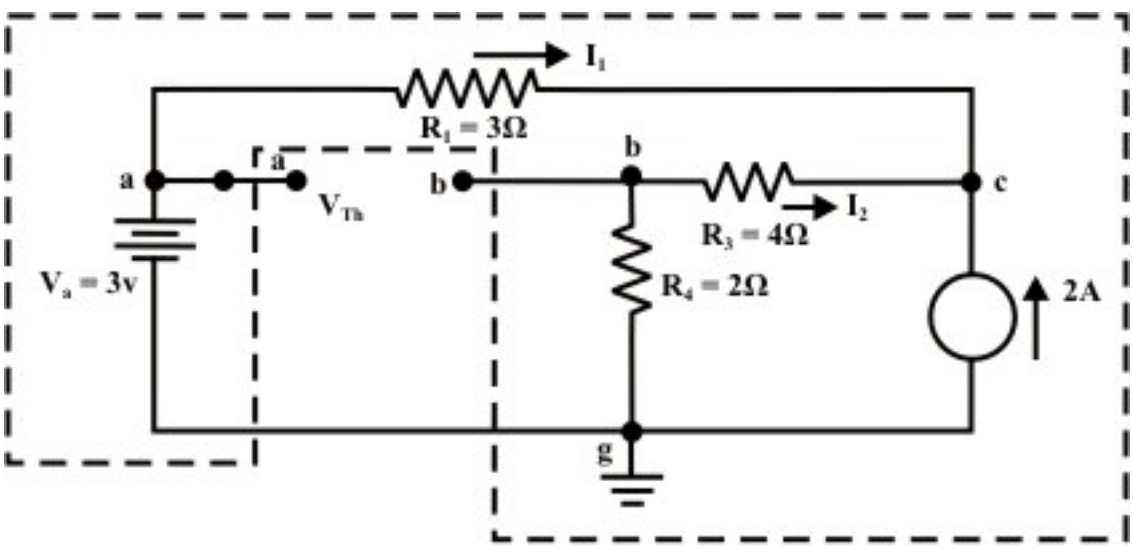

Fig. 8.3(b)

Step-2: Apply any method (say node-voltage method) to calculate V_{Th}.

At node C:

$$2 + I_1 + I_2 = 0$$

$$2 + \frac{(3 - V_c)}{3} + \frac{(0 - V_c)}{6} \Rightarrow V_c = 6\,volt$$

Now, the currents $I_1 \,\&\, I_2$ can easily be computed using the following expressions.

$I_1 = \frac{V_a - V_c}{3} = \frac{3-6}{3} = -1A$ (note, current I_1 is flowing from 'c' to 'a')

$I_2 = \frac{0 - V_c}{6} = \frac{-6}{6} = -1A$ (note, current I_2 is flowing from 'c' to 'g')

Step-3: Redraw the circuit (fig.8.3(b) indicating the direction of currents in different branches. One can find the Thevenin's voltage V_{Th} using KVL around the closed path 'gabg' (see fig.8.3.(c).

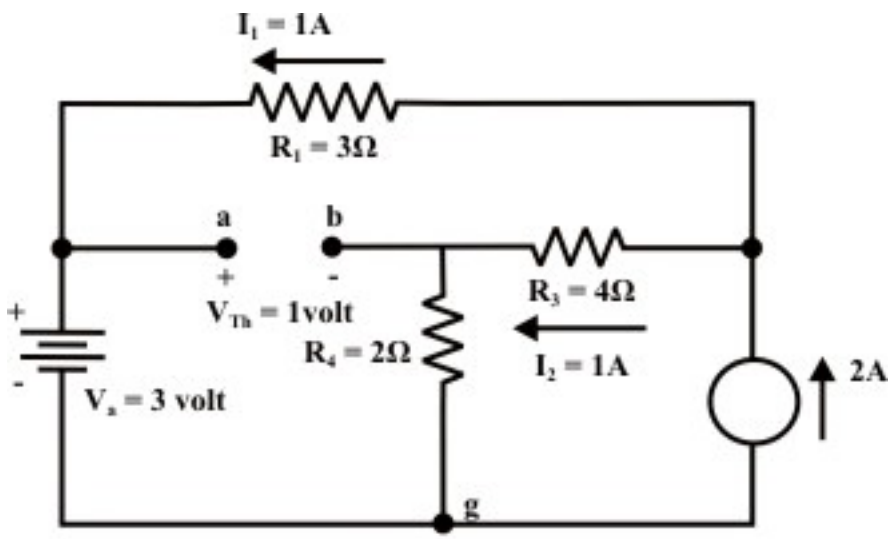

Fig. 8.3(c)

$V_{Th} = V_{ag} - V_{bg} = 3 - 2 = 1 volt$

Step-4: Replace all sources by their internal resistances. In this problem, voltage source has an internal resistance zero (0) (ideal voltage source) and it is short-circuited with a wire. On the other hand, the current source has an infinite internal resistance (ideal current source) and it is open-circuited (just remove the current source). Thevenin's resistance R_{Th} of the fixed part of the circuit can be computed by looking at the load terminals 'a'- 'b' (see fig.8.3(d)).

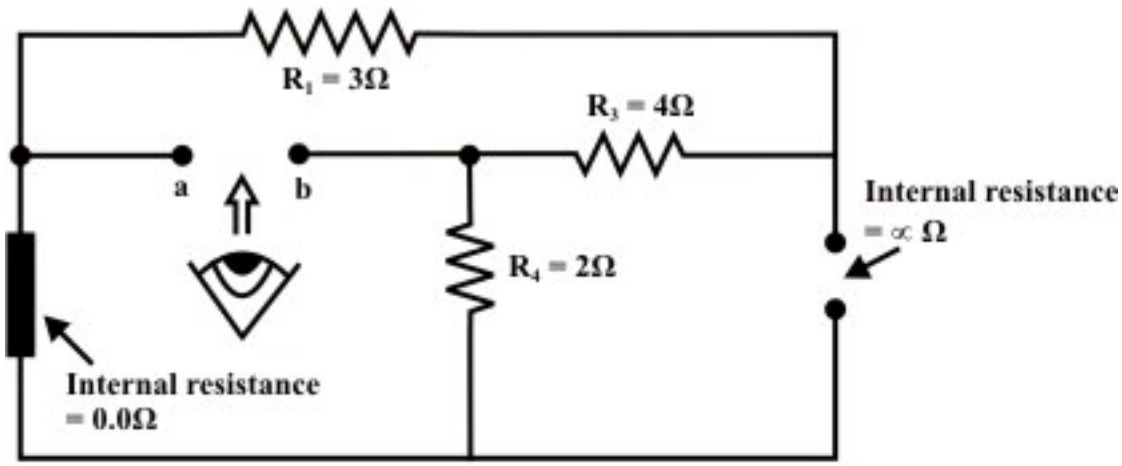

Fig. 8.3(d)

$$R_{Th} = (R_1 + R_3) \| R_4 = (3+4) \| 2 = 1.555\,\Omega$$

Step-5: Place R_{Th} in series with V_{Th} to form the Thevenin's equivalent circuit (a simple practical voltage source). Reconnect the original load resistance $R_L = R_2 = 1\Omega$ to the Thevenin's equivalent circuit (note the polarity of 'a' and 'b' is to be considered carefully) as shown in fig.8.3(e).

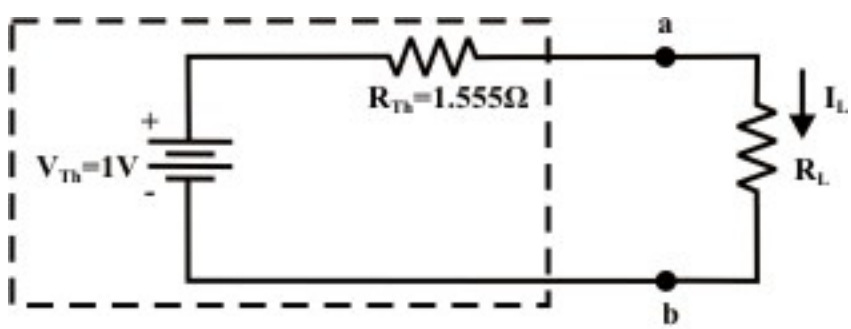

Fig. 8.3(e): Equivalent dc circuit fig. 8.3(b) is replace by a practical voltage source.

$$I_L = \frac{V_{Th}}{R_{Th} + R_L} = \frac{1}{1.555+1} = 0.39\,A(a\ to\ b)$$

Step-6: The circuit shown in fig.8.3 (a) is redrawn to indicate different branch currents. Referring to fig.8.3 (f), one can calculate the voltage V_{bg} and voltage across the current source (V_{cg}) using the following equations.

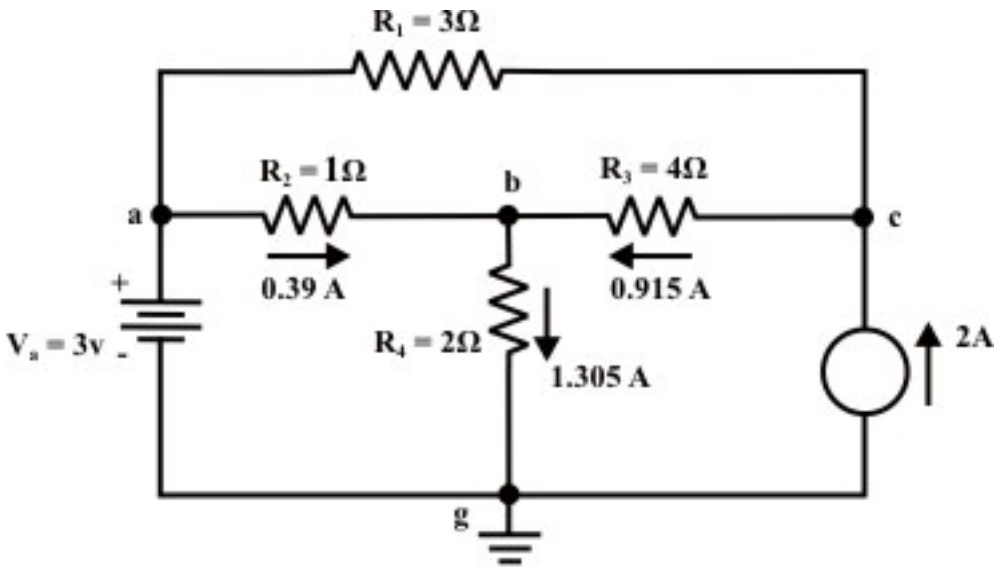

Fig. 8.3(f)

$$V_{bg} = V_{ag} - V_{ab} = 3 - 1 \times 0.39 = 2.61\, volt.$$

$$I_{bg} = \frac{2.61}{2} = 1.305\, A;\ \ I_{cb} = 1.305 - 0.39 = 0.915\, A$$

$$V_{cg} = 4 \times 0.915 + 2 \times 1.305 = 6.27\, volt.$$

Example-L.8.2 For the circuit shown in fig.8.4 (a), find the current I_L through $6\,\Omega$ resistor using Thevenin's theorem.

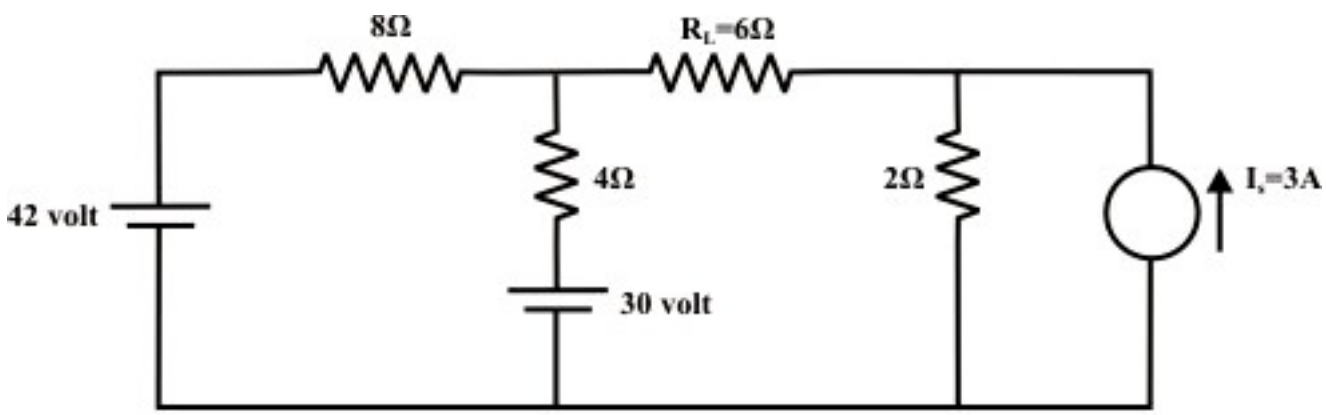

Fig. 8.4(a)

Solution:

Step-1: Disconnect 6Ω from the terminals 'a' and 'b' and the corresponding circuit diagram is shown in fig.L.8.4 (b). Consider point 'g' as ground potential and other voltages are measured with respect to this point.

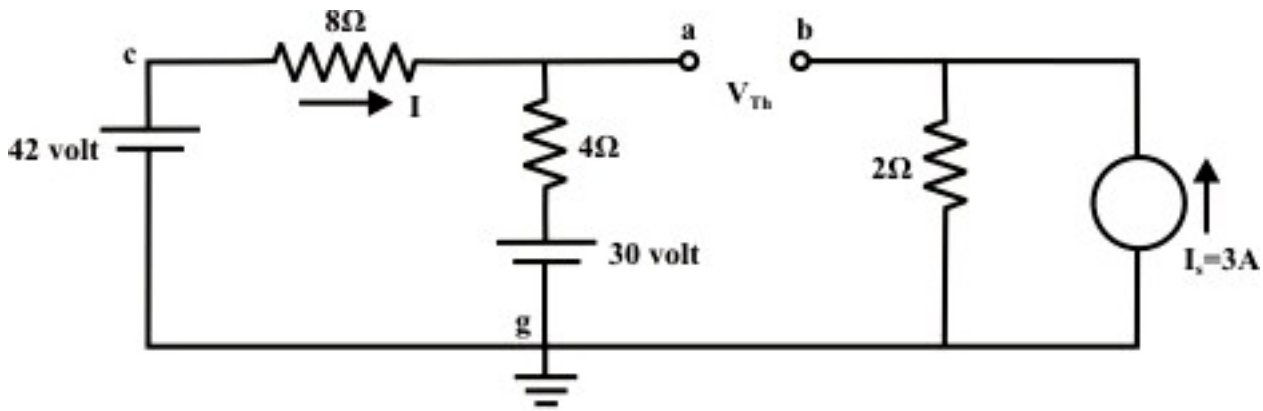

Fig. 8.4(b)

Step-2: Apply any suitable method to find the Thevenin's voltage (V_{Th}) (or potential between the terminals 'a' and 'b'). KVL is applied around the closed path 'gcag' to compute Thevenin's voltage.

$$42-8I-4I-30=0 \;\Rightarrow\; I=1A$$

$$Now,\; V_{ag}=30+4=34\,volt;\; V_{bg}=2\times 3=6\,volt.$$

$V_{Th}=V_{ab}=V_{ag}-V_{bg}=34-6=28\,volt$ (note 'a' is higher potential than 'b')

Step-3: Thevenin's resistance R_{Th} can be found by replacing all sources by their internal resistances (all voltage sources are short-circuited and current sources are just removed or open circuited) as shown in fig.8.4 (c).

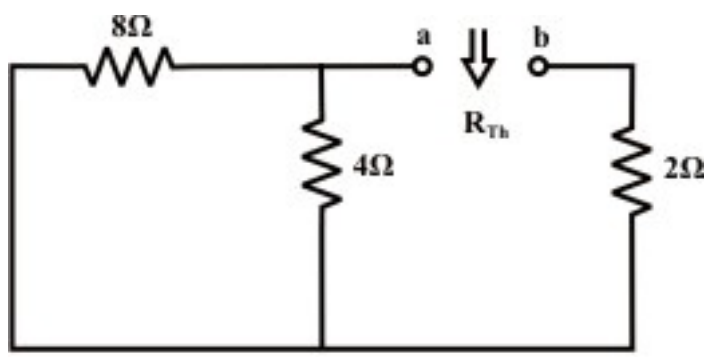

Fig. 8.4(c)

$$R_{Th}=(8\,||\,4)+2=\frac{8\times 4}{12}+2=\frac{14}{3}=4.666\Omega$$

Step-4: Thevenin's equivalent circuit as shown in fig.8.4 (d) is now equivalently represents the original circuit (fig.L.8.4(a).

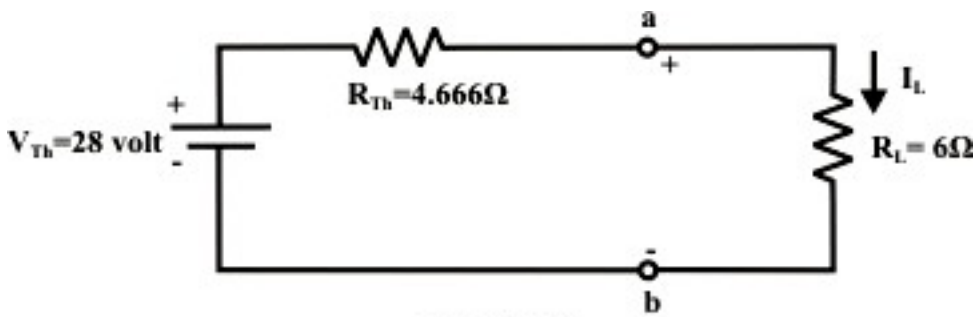

Fig. 8.4(d)

$$I_L = \frac{V_{Th}}{R_{Th} + R_L} = \frac{28}{4.666 + 6} = 2.625\,A$$

Example-L.8.3 The box shown in fig.8.5 (a) consists of independent dc sources and resistances. Measurements are taken by connecting an ammeter in series with the resistor R and the results are shown in table.

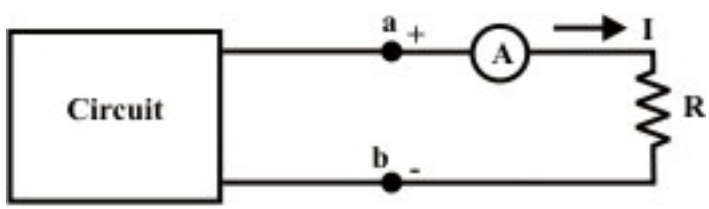

Fig. 8.5(a)

Table

R	I
$10\,\Omega$	$2\,A$
$20\,\Omega$	$1.5\,A$
?	$0.6\,A$

Solution: The circuit shown in fig.8.5(a) can be replaced by an equivalent Thevenin's voltage source as shown in fig.8.5(b). The current flowing through the resistor R is expressed as

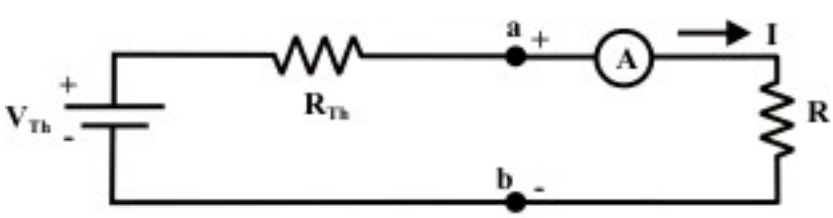

Fig. 8.5(b): Equivalent circuit of fig. 8.5(a)

$$I = \frac{V_{Th}}{R_{Th} + R} \tag{8.4}$$

The following two equations are written from measurements recorded in table.

$$\frac{V_{Th}}{R_{Th}+10}=2 \Rightarrow \; V_{Th}-2R_{Th}=20 \tag{8.5}$$

$$\frac{V_{Th}}{R_{Th}+20}=1.5 \Rightarrow \; V_{Th}-1.5R_{Th}=30 \tag{8.6}$$

Solving equations (8.5) and (8.6) we get,

$V_{Th}=60\ volt;\ R_{Th}=20\Omega$

The choice of R that yields current flowing the resistor is $0.6A$ can be obtained using the equation (8.4).

$$I=\frac{V_{Th}}{R_{Th}+R}=\frac{60}{20+R}=0.6 \;\Rightarrow R=80\Omega.$$

L.8.4 Maximum Power Transfer Theorem

In an electric circuit, the load receives electric energy via the supply sources and converts that energy into a useful form. The maximum allowable power receives by the load is always limited either by the heating effect (incase of resistive load) or by the other power conversion taking place in the load. The Thevenin and Norton models imply that the internal circuits within the source will necessarily dissipate some of power generated by the source. A logical question will arise in mind, how much power can be transferred to the load from the source under the most practical conditions? In other words, what is the value of load resistance that will absorbs the maximum power from the source? This is an important issue in many practical problems and it is discussed with a suitable example.

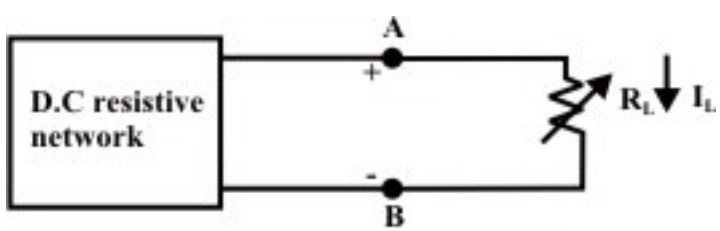

Fig. 8.6(a)

Let us consider an electric network as shown in fig.8.6(a), the problem is to find the choice of the resistance R_L so that the network delivers maximum power to the load or in other words what value of load resistance R_L will absorb the maximum amount of power from the network. This problem can be solved using nodal or mesh current analysis to obtain an expression for the power absorbed by R_L, then the derivative of this expression with respect to R_L will establish the condition under what circumstances the

maximum power transfer occurs. The effort required for such an approach can be quite tedious and complex. Fortunately, the network shown in fig.L.8.6(a) can be represented by an equivalent Thevenin's voltage source as shown in fig.L.8.6(b).

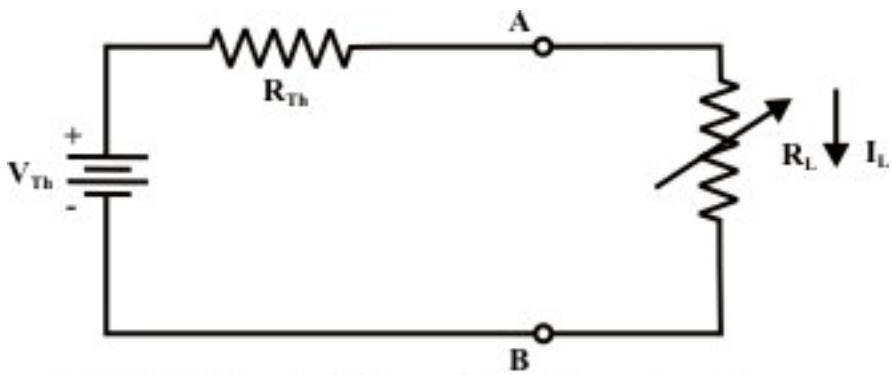

Fig. 8.6(b): The circuit for maximum Power transfer

In fig.8.6(b) a variable load resistance R_L is connected to an equivalent Thevenin circuit of original circuit(fig.8.6(a)). The current for any value of load resistance is

$$I_L = \frac{V_{Th}}{R_{Th} + R_L}$$

Then, the power delivered to the load is

$$P_L = I_L^{\,2} \times R_L = \left[\frac{V_{Th}}{R_{Th} + R_L} \right]^2 \times R_L$$

The load power depends on both R_{Th} *and* R_L; however, R_{Th} is constant for the equivalent Thevenin network. So power delivered by the equivalent Thevenin network to the load resistor is entirely depends on the value of R_L. To find the value of R_L that absorbs a maximum power from the Thevenin circuit, we differentiate P_L with respect to R_L.

$$\frac{dP(R_L)}{dR_L} = V_{Th}^{\,2} \left[\frac{(R_{Th} + R_L)^2 - 2R_L \times (R_{Th} + R_L)}{\left(R_{Th} + R_L\right)^4} \right] = 0 \Rightarrow (R_{Th} + R_L) - 2R_L = 0 \Rightarrow R_L = R_{Th} \tag{8.7}$$

For maximum power dissipation in the load, the condition given below must be satisfied

$$\left. \frac{d^2 P(R_L)}{dR_L^{\,2}} \right|_{R_L = R_{Th}} = -\frac{V_{Th}^{\,2}}{8R_{Th}} < 0$$

This result is known as "Matching the load" or maximum power transfer occurs when the load resistance R_L matches the Thevenin's resistance R_{Th} of a given systems. Also, notice that under the condition of maximum power transfer, the load voltage is, by voltage division, one-half of the Thevenin voltage. The expression for maximum power dissipated to the load resistance is given by

$$P_{\max} = \left[\frac{V_{Th}}{R_{Th}+R_L}\right]^2 \times R_L \Bigg|_{R_L = R_{Th}} = \frac{V_{Th}^{\ 2}}{4R_{Th}}$$

The total power delivered by the source

$P_T = I_L^{\ 2}\left(R_{Th}+R_L\right) = 2\times I_L^{\ 2} R_L$

This means that the Thevenin voltage source itself dissipates as much power in its internal resistance R_{Th} as the power absorbed by the load R_L. Efficiency under maximum power transfer condition is given by

$$Efficiency = \frac{I_L^{\ 2} R_L}{2 I_L^{\ 2} R_L} \times 100 = 50\% \qquad (8.8)$$

For a given circuit, V_{Th} *and* R_{Th} are fixed. By varying the load resistance R_L, the power delivered to the load varies as shown in fig.8.6(c).

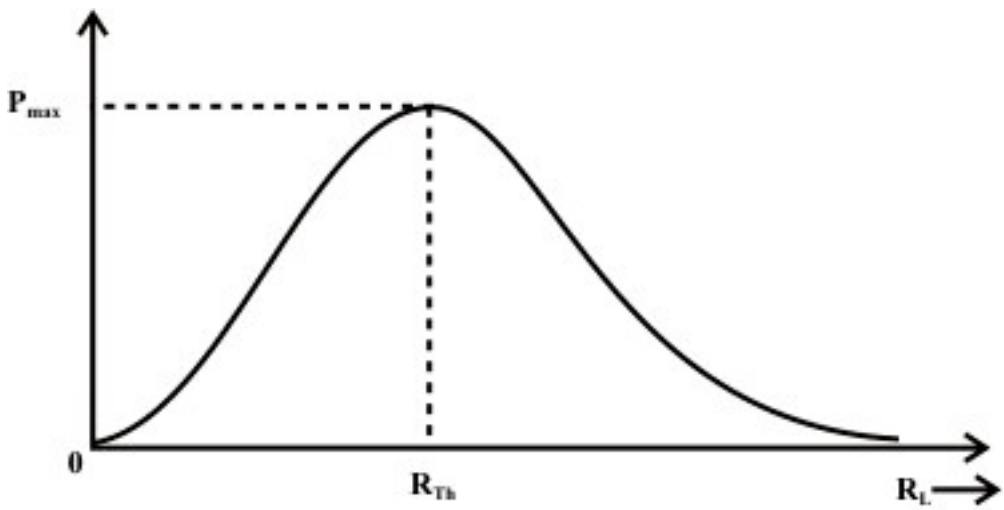

Fig. 8.6(c): Power dissipated to the load as a function of R_L

Remarks: The Thevenin equivalent circuit is useful in finding the maximum power that a linear circuit can deliver to a load.

Example-L.8.4 For the circuit shown in fig.8.7(a), find the value of R_L that absorbs maximum power from the circuit and the corresponding power under this condition.

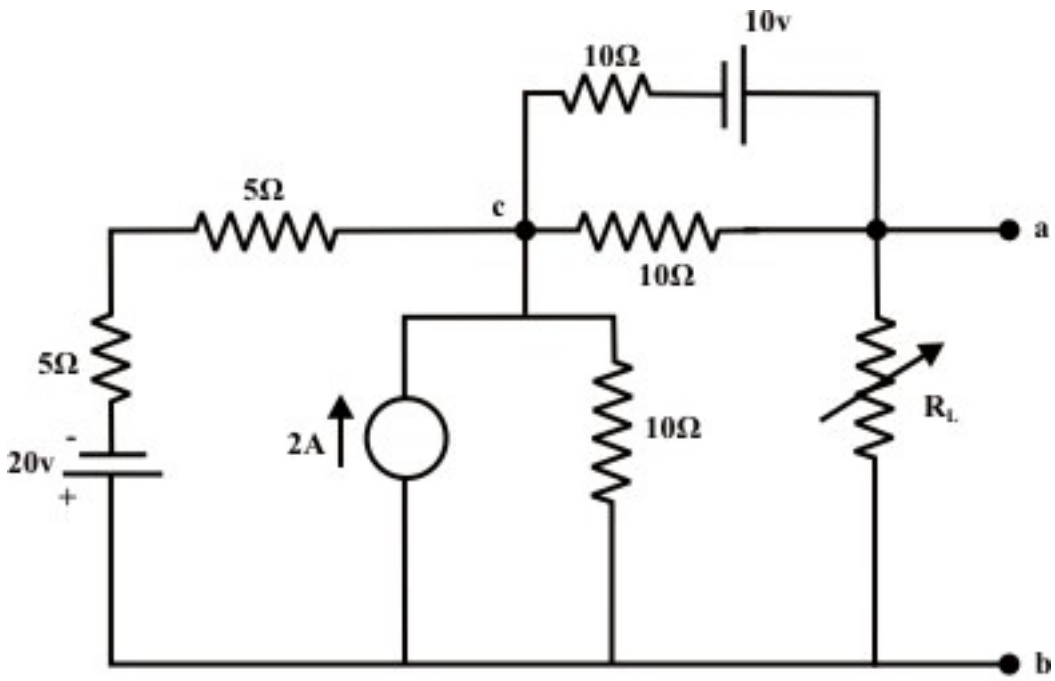

Fig. 8.7(a)

Solution: Load resistance R_L is disconnected from the terminals 'a' and 'b' and the corresponding circuit diagram is drawn (see fig.8.7(b)).

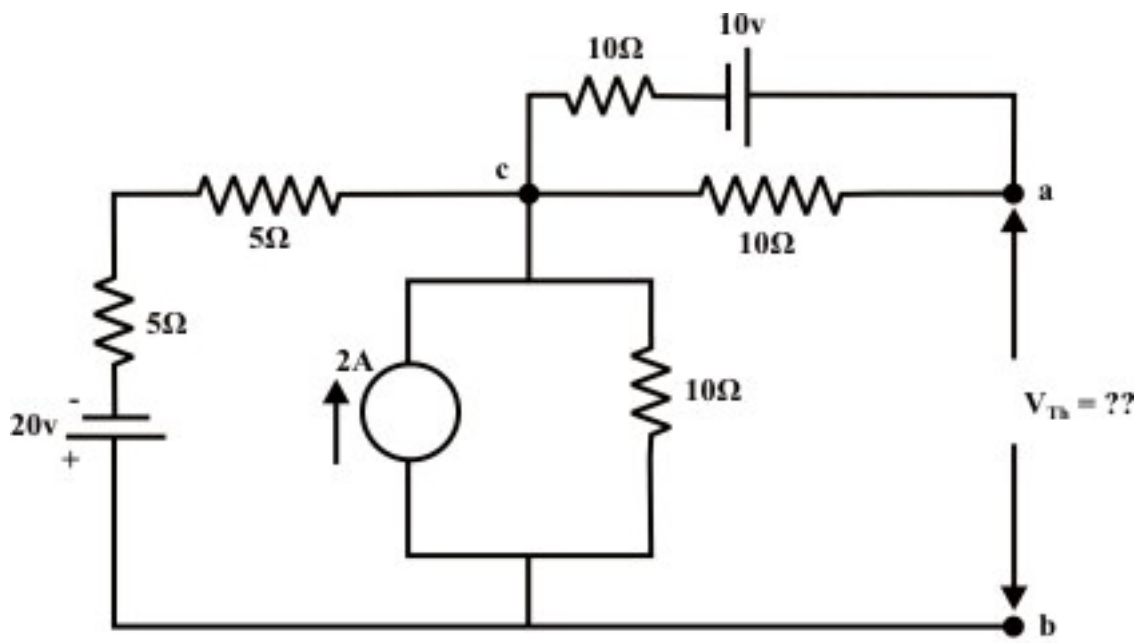

Fig. 8.7(b)

The above circuit is equivalently represented by a Thevenin circuit and the corresponding Thevenin voltage V_{Th} and Thevenin resistance R_{Th} are calculated by following the steps given below:

Now applying 'Super position theorem', one can find V_{Th} (voltage across the 'a' and 'b' terminals, refer fig. 8.7(b)). Note any method (node or mesh analysis) can be applied to find V_{Th}.

Considering only 20v source only

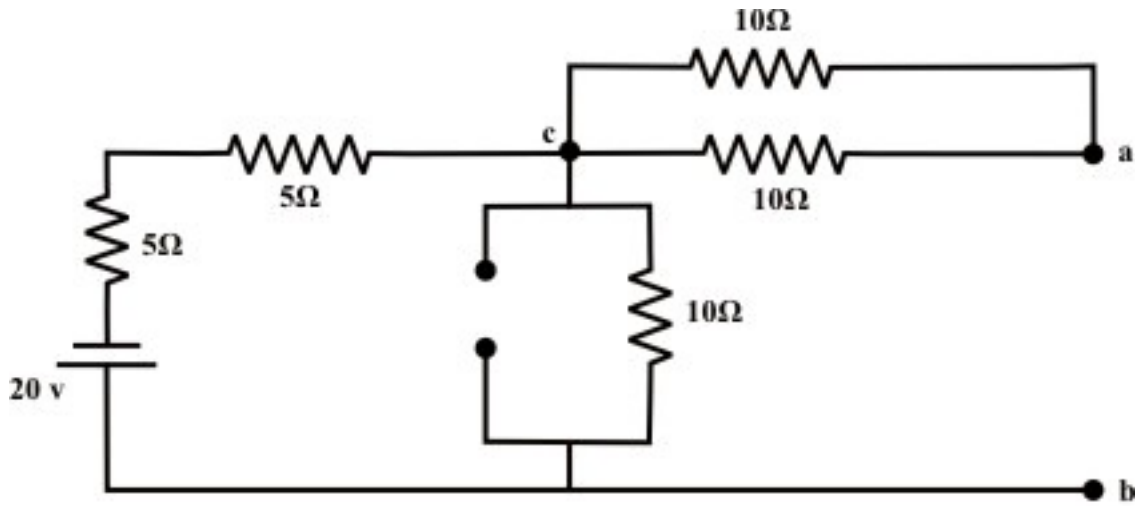

Fig. 8.7(c)

From the above circuit the current through 'b-c' branch $=\frac{20}{20}=1A$ (from 'b' to 'a') whereas the voltage across the 'b-a' branch $v_{ba}=1\times 10=10\ volt$. ('b' is higher potential than 'a'). $\therefore v_{ab}=-10\,volt$

Considering only 10v source only

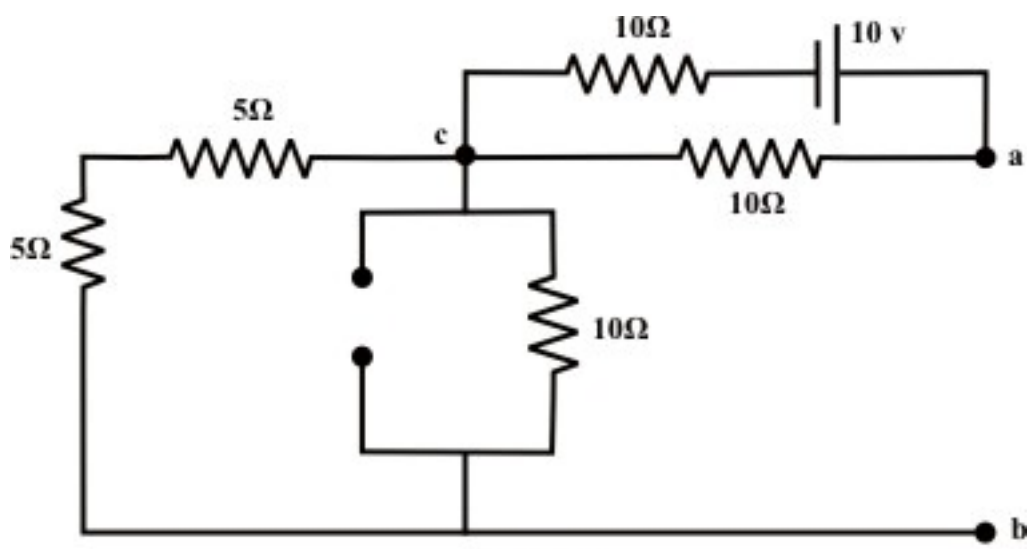

Fig. 8.7(d)

Note: No current is flowing through ‘cb’-branch.
$\therefore$ V_{ab} = 5v (‘a’ is higher potential than ‘b’)

Consider only $2\,A$ current source only

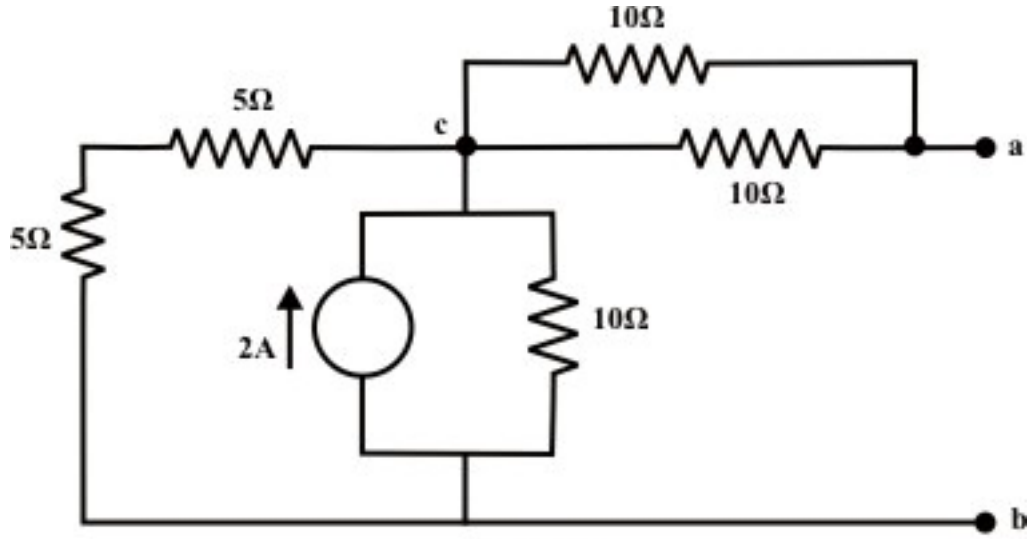

Fig. 8.7(e)

Note that the current flowing the ‘c-a’ branch is zero
$\therefore$ V_{ab} =10 v (‘a’ is higher potential than ‘b’ point).

The voltage across the ‘a’ and ‘b’ terminals due to the all sources = V_{Th} = V_{ab} (due to 20v) + V_{ab} (due to 10v) + V_{ab} (due to 2A source) = - 10 + 5 + 10 = 5v (a is higher potential than the point ‘b’).

To compute R_{Th}:

Replace all voltage and current sources by their internal resistance of the circuit shown in fig.8.7(b).

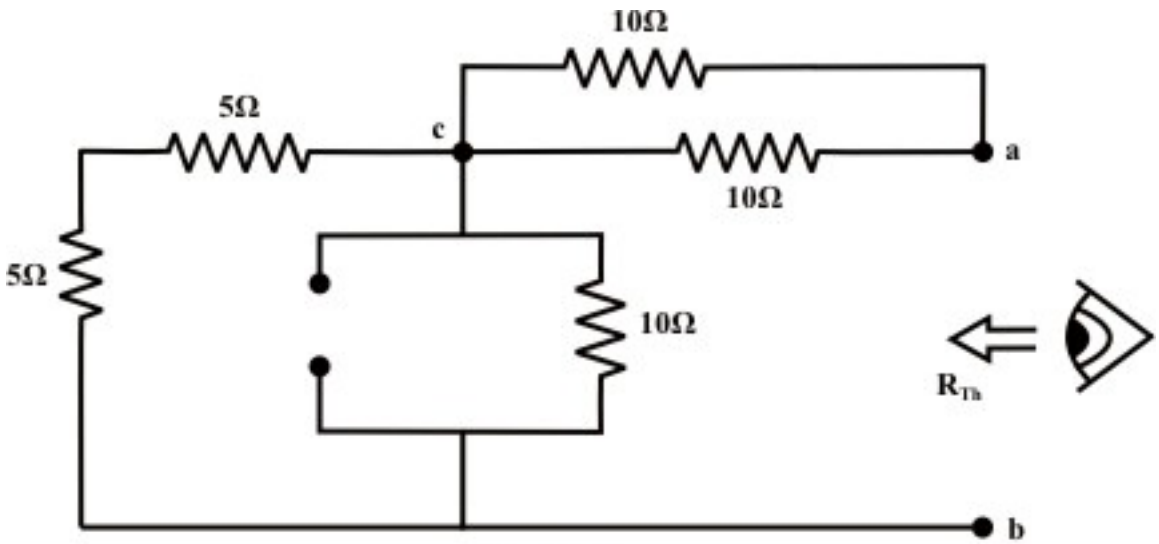

Fig. 8.7(f)

$R_{Th} = R_{ab} = ((5+5) \parallel 10) + (10 \parallel 10)$
$= 5 + 5 = 10\ \Omega$

Thevenin equivalent circuit is drawn below:

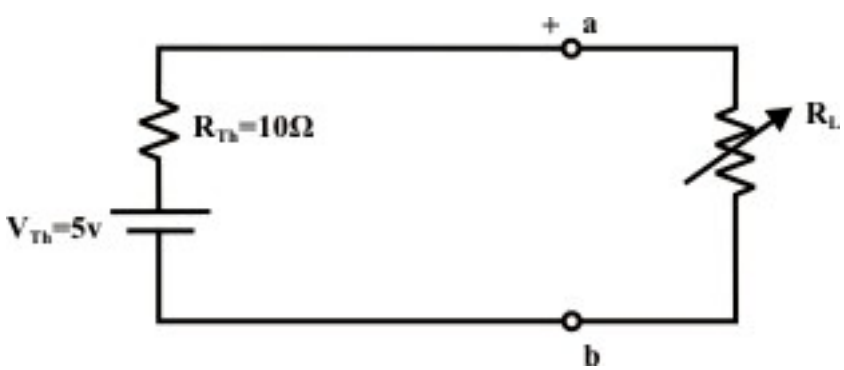

The choice of R_L that absorbs maximum power from the circuit is equal to the value of Thevenin resistance R_{Th}

$R_L = R_{Th} = 10\Omega$

Under this condition, the maximum power dissipated to R_L is

$$P_{max} = \frac{1}{4}\frac{V_{Th}^2}{R_{Th}} = \frac{1}{4}\cdot\frac{25}{10} = 0.625 \text{ watts.}$$

L.8.5 Proof of Thevenin Theorem

The basic concept of this theorem and its proof are based on the principle of superposition theorem. Let us consider a linear system in fig.L.8.8(a).

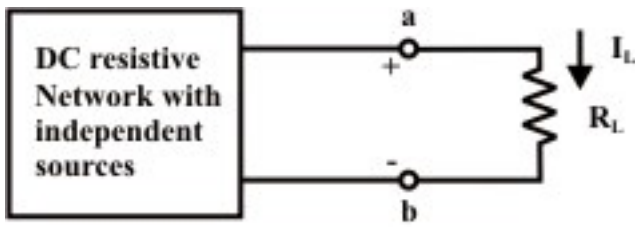

Fig. 8.8(a)

It is assumed that the dc resistive network is excited by the independent voltage and current sources. In general, there will be certain potential difference ($V_{oc} = V_{Th}$) between the terminals 'a' and 'b' when the load resistance R_L is disconnected from the terminals. Fig.8.8(b) shows an additional voltage source E (ideal) is connected in series with the load resistance R_L in such a way (polarity of external voltage source E in opposition the open-circuit voltage V_{oc} across 'a' and 'b' terminals) so that the combined effect of all internal and external sources results zero current through the load resistance R_L .

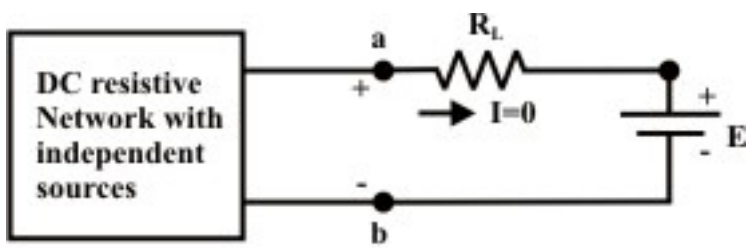

Fig. 8.8(b)

According to the principle of superposition, zero current flowing through R_L can be considered as a algebraic sum (considering direction of currents through R_L) of (i) current through R_L due to the external source E only while all other internal sources are replaced by their internal resistances (all voltage sources are short-circuited and all current sources are open circuited), and (ii) current through R_L due to the combined effect of all internal sources while the external source E is shorted with a wire. For the first case, assume the current $I_1\left(=\dfrac{E}{R_{Th}+R_L}\right)$ (due to external source E only) is flowing through R_L from right to left direction($\leftarrow$) as shown in fig.8.8(c).

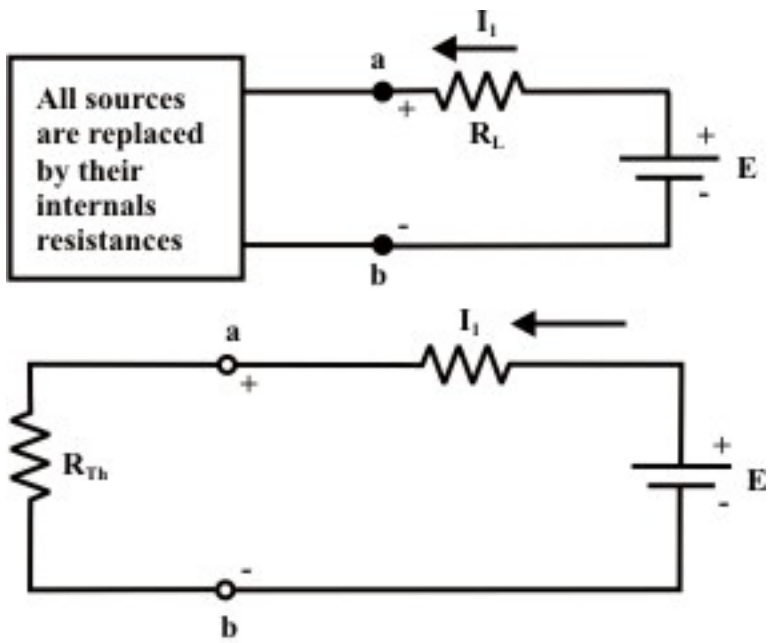

Fig. 8.8(c)

For the second case, the current I_2 (due to combined effect of all internal sources only) is flowing through R_L with same magnitude of I_1 but in opposite direction (left to right). Note that the resultant current I through the resistor R_L is zero due to the combination of internal and external sources (see fig.8.8(b)). This situation will arise provided the voltage (V_{ab}) across the 'a' and 'b' terminals is exactly same (with same polarity) as that of external voltage E and this further implies that the voltage across V_{ab} is nothing but an open-circuit voltage (V_{Th}) while the load resistance R_L is disconnected from the terminals 'a' and 'b'. With the logics as stated above, one can find the current expression $I_2\left(=\frac{V_{Th}}{R_{Th}+R_L}\right)$ for the circuit (fig.8.8(b)) when the external source E is short-circuited with a wire. In other words, the original circuit (fig.8.8(a)) can be replaced by an equivalent circuit that delivers the same amount of current I_L through R_L. Fig.8.8(d) shows the equivalent Thevenin circuit of the original network (fig.8.8(a)).

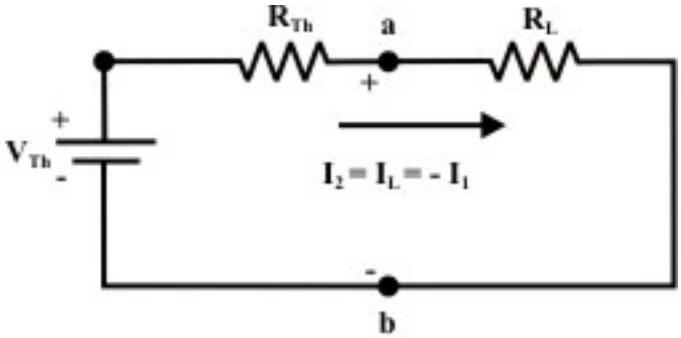

Fig. 8.8(d)

L.8.6 Norton's theorem

Norton's theorem states that any two terminals A & B of a network composed of linear resistances (see fig.8.9(a)) and independent sources (voltage or current, combination of voltage and current sources) may be replaced by an equivalent current source and a parallel resistance. The magnitude of current source is the current measured in the short circuit placed across the terminal pair A & B. The parallel resistance is the equivalent resistance looking into the terminal pair A & B with all independent sources has been replaced by their internal resistances.

Any linear dc circuit, no matter how complicated, can also be replaced by an equivalent circuit consisting of one dc current source in parallel with one resistance. Precisely, Norton's theorem is a dual of Thevenin's theorem. To find a current I_L through the load resistance R_L (as shown in fig.8.9(a)) using Norton's theorem, the following steps are followed:

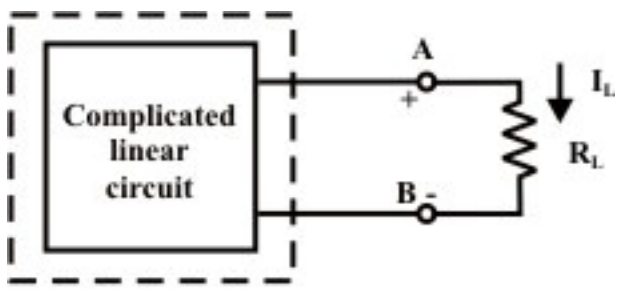

Fig. 8.9(a)

Step-1: Short the output terminal after disconnecting the load resistance (R_L) from the terminals A & B and then calculate the short circuit current I_N (as shown in fig.8.9(b)). In general, one can apply any of the techniques (mesh-current, node-voltage and superposition method) learnt in earlier lessons to compute I_N (experimentally just measure the short-circuit current using an ammeter).

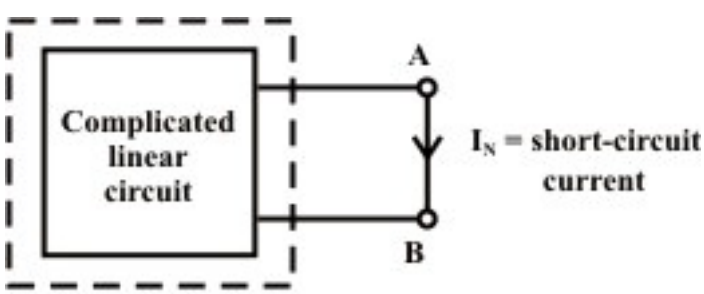

Fig. 8.9(b)

Step-2: Redraw the circuit with each practical sources replaced by its internal resistance while the short–circuit across the output terminals removed (note: voltage sources should be short-circuited (just replace with plain wire) and current sources should be open-

circuited (just removed)). Look backward into the resulting circuit from the load terminals ($A \& B$), as suggested by the eye in fig.8.9(c).

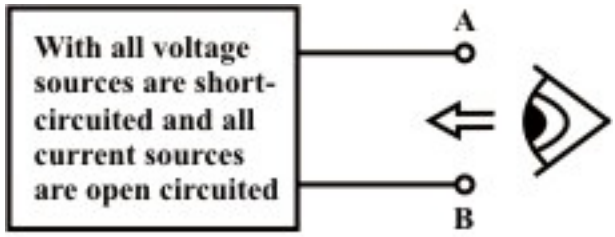

Fig. 8.9(c)

Step-3: Calculate the resistance that would exist between the load terminals A & B (or equivalently one can think as if a voltage source is applied across the load terminals and then trace the current distribution through the circuit (fig.8.9(c)) in order to calculate the resistance across the load terminals). This resistance is denoted as R_N, is shown in fig.8.9 (d). Once again, calculating this resistance may be a difficult task but one can try to use the standard circuit reduction technique or $Y-\Delta$ *or* $\Delta - Y$ transformation techniques. It may be noted that the value of Norton's resistance R_N is truly same as that of Thevenin's resistance R_{Th} in a circuit.

Step-4: Place R_N in parallel with current I_N to form the Norton's equivalent circuit (replacing the imaginary fencing portion or fixed part of the circuit with an equivalent practical current source) as shown in fig.8.8 (d).

Step-5: Reconnect the original load to the Norton current circuit; the load's voltage, current and power may be calculated by a simple arithmetic operation only.

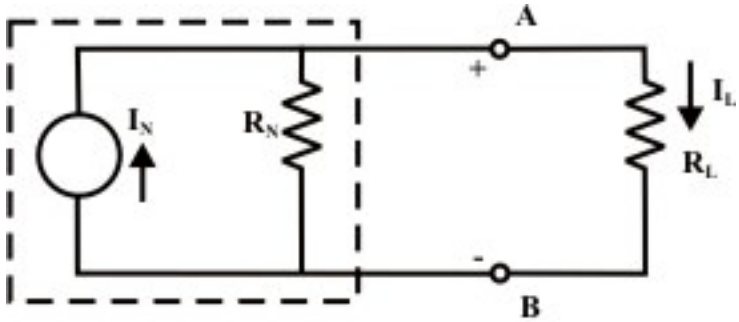

Fig. 8.9(d): Norton's equivalent circuit of the original network

Load current $I_L = \dfrac{R_N}{R_N + R_L} \times I_N$ (8.9)

Voltage across the load $V_L = I_L \times R_L$ (8.10)

Power absorbed by the load $P_L = I_L^{\,2} \times R_L$ (8.11)

Remarks: (i) Similar to the Thevenin's theorem, Norton's theorem has also a similar advantage over the normal circuit reduction technique or any other technique when it is used to calculate load current (I_L), load voltage (V_L) and load power (P_L) for different loads.

(ii)Fortunately, with help of either Norton's theorem or Thevenin's theorem one can find the choice of load resistance R_L that results in the maximum power transfer to the load.

(iii) Norton's current source may be replaced by an equivalent Thevenin's voltage source as shown in fig.L.8.1(b). The magnitude of voltage source (V_{Th}) and its internal resistances (R_{Th}) are expressed by the following relations

$V_{Th} = I_N \times R_N$; $R_{Th} = R_N$ (with proper polarities at the terminals)

In other words, a source transformation converts a Thevenin equivalent circuit into a Norton equivalent circuit or vice-verse.

L.8.7 Application of Norton's Theorem

Example-L.8.5 For the circuit shown in fig.8.10(a), find the current through $R_L = R_2 = 1\Omega$ resistor (I_{a-b} branch) using Norton's theorem & hence calculate the voltage across the current source (V_{cg}).

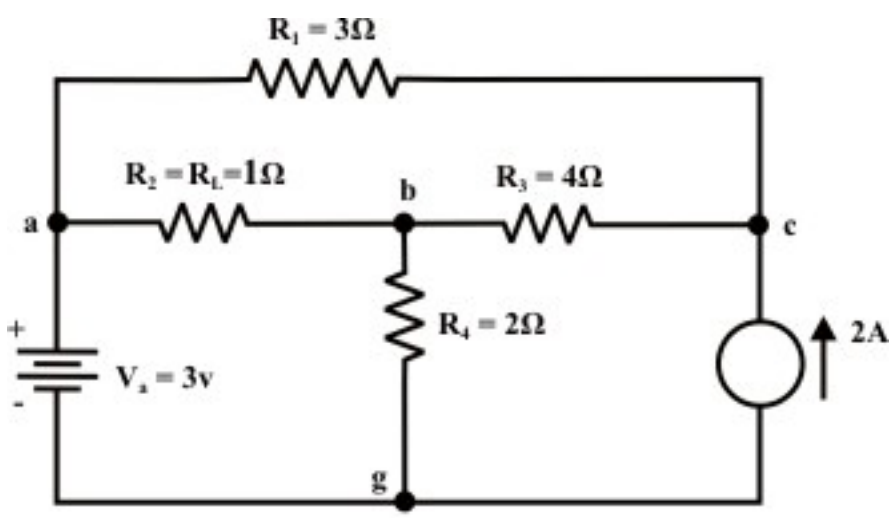

Fig. 8.10(a)

Solution:

Step-1: Remove the resistor through which the current is to be found and short the terminals 'a' and 'b' (see fig.8.10(b)).

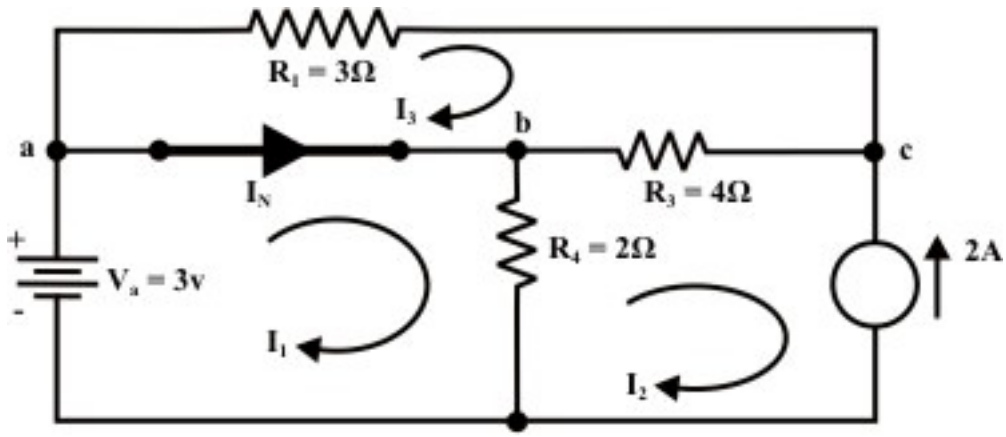

Fig. 8.10(b)

Step-2: Any method can be adopted to compute the current flowing through the a-b branch. Here, we apply 'mesh – current' method.

Loop-1

$3 - R_4(I_1 - I_2) = 0$, where $I_2 = -2A$

$R_4 I_1 = 3 + R_4 I_2 = 3 - 2 \times 2 = -1 \quad \therefore I_1 = -0.5A$

Loop-3

$$-R_1 I_3 - R_3(I_3 - I_2) = 0$$

$$-3I_3 - 4(I_3 + 2) = 0$$

$$-7I_3 - 8 = 0$$

$$I_3 = -\frac{8}{7} =$$

$$\therefore I_N = (I_1 - I_3) = \left(-0.5 + \frac{8}{7}\right) = \frac{-7+16}{14}$$

$$= \frac{9}{14} A \text{ (current is flowing from 'a' to 'b')}$$

Step-3: To compute R_N, all sources are replaced with their internal resistances. The equivalent resistance between 'a' and 'b' terminals is same as the value of Thevenin's resistance of the circuit shown in fig.8.3(d).

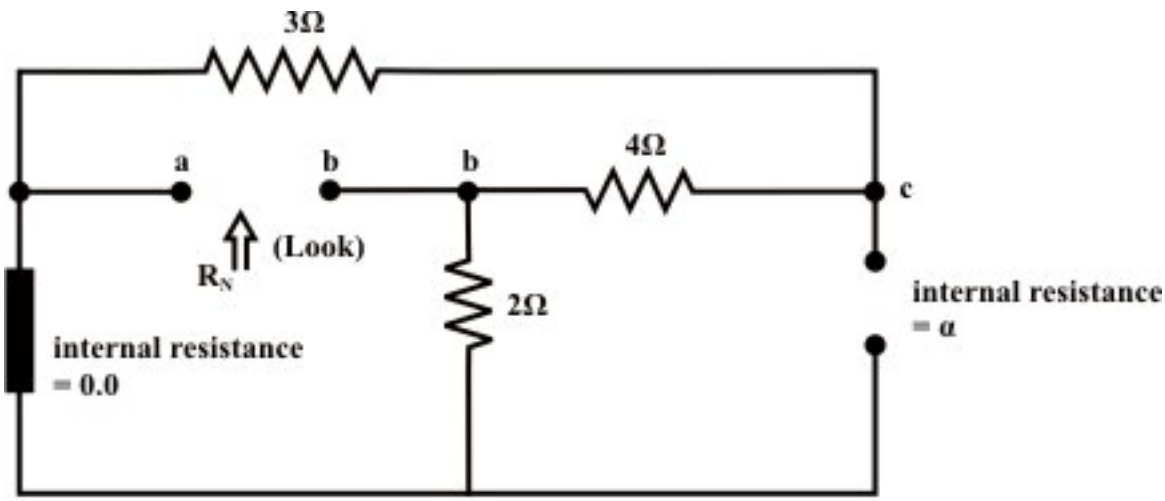

Fig. 8.10(c)

Step-4: Replace the original circuit with an equivalent Norton's circuit as shown in fig.8.10(d).

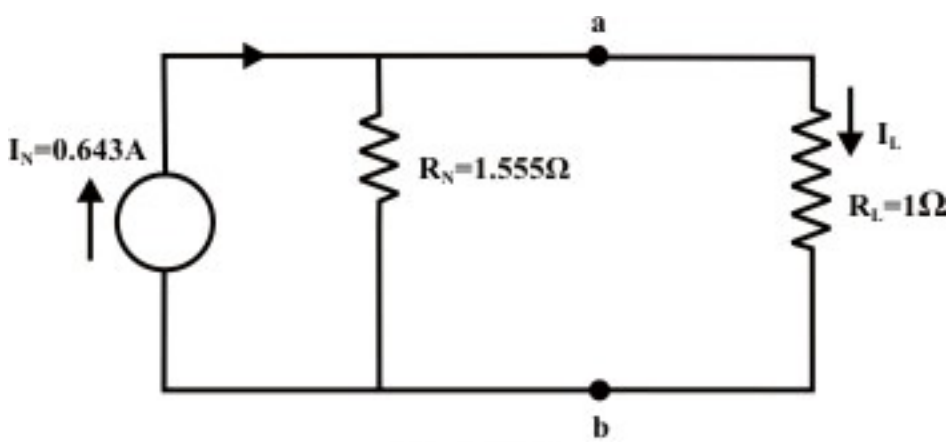

Fig. 8.10(d)

$$I_L = \frac{R_N}{R_N + R_L} \times I_N = \frac{1.555}{1.555+1} \times 0.643 = 0.39\text{A (a to b)}$$

In order to calculate the voltage across the current source the following procedures are adopted. Redraw the original circuit indicating the current direction in the load.

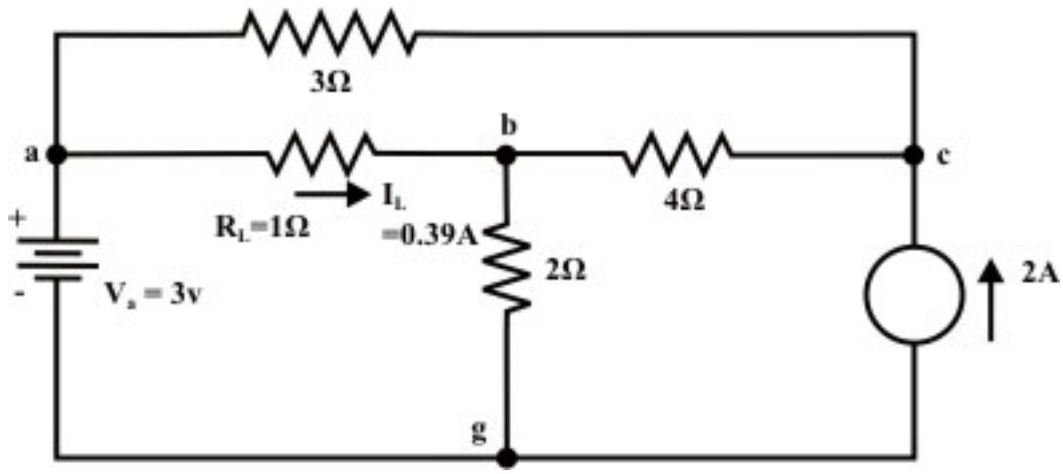

$$V_{bg} = 3 - 1 \times 0.39 = 2.61\text{volt}$$

$$I_{bg} = \frac{2.61}{2} = 1.305\text{A}$$

$$I_{cb} = 1.305 - 0.39 = 0.915\text{A ('c' to 'b')}$$

$$\therefore\ V_{cg} = 2 \times 1.305 + 4 \times .915 = 6.26\text{volt ('c' is higher potential than 'g')}$$

Example-L.8.6 For the circuit shown in fig.8.11(a), the following measurements are taken and they are given in table.

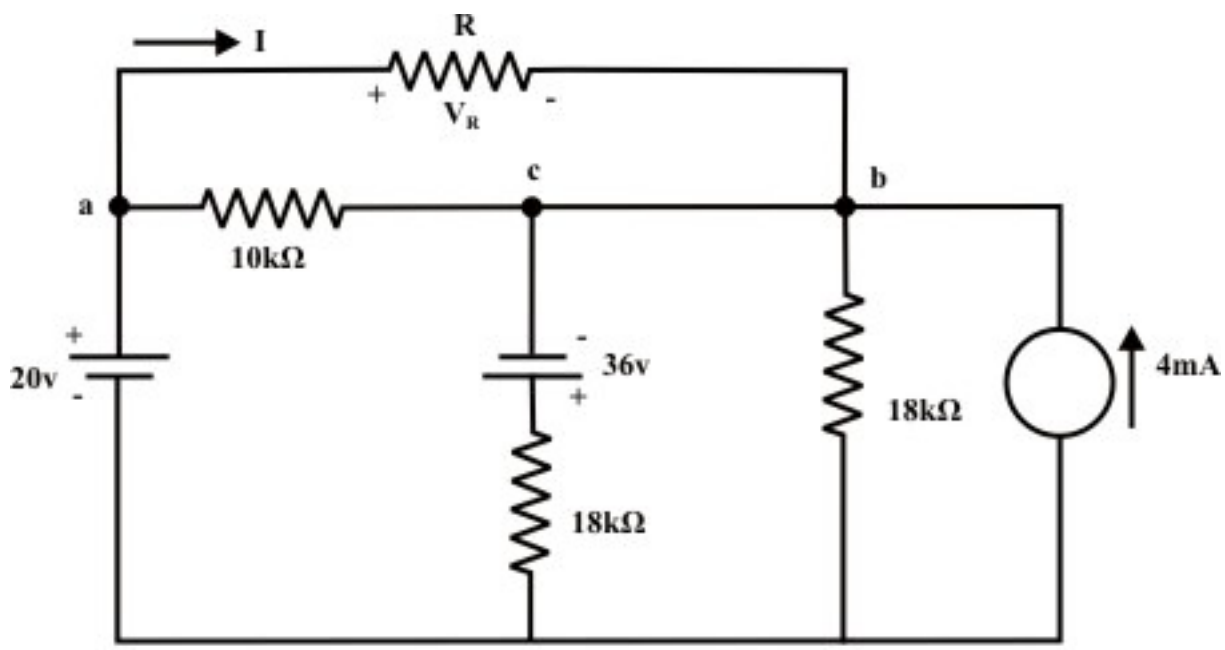

Fig. 8.11(a)

Table

R	I	V_R
Open	$0\ ma$	$1.053\ V$
Short	$0.222\,ma$	$0V$
?	$0.108\ ma$	**?**
$25\,k\Omega$	**?**	**?**

Find the current following through the resistor when $R = 25\,k\Omega$ and voltage drop across the resistor.

Solution: First measurement implies the Thevenin's voltage (V_{Th}) across the terminals 'a' and 'b' $= 1.053\ V$.

Second measurement implies the Norton's current (I_N) through the shorted terminals 'a' and 'b' $= 0.222\,ma$.

With the above two measurements one can find out the Thevenin's resistance $R_{Th}\,(= R_N)$ using the following relation

$$R_{Th} = \frac{V_{Th}}{I_N} = \frac{1.053}{0.222 \times 10^{-3}} = 4.74\,k\Omega$$

Thevenin equivalent circuit between the terminals 'a' and 'b' of the original circuit is shown in fig.8.11(b).

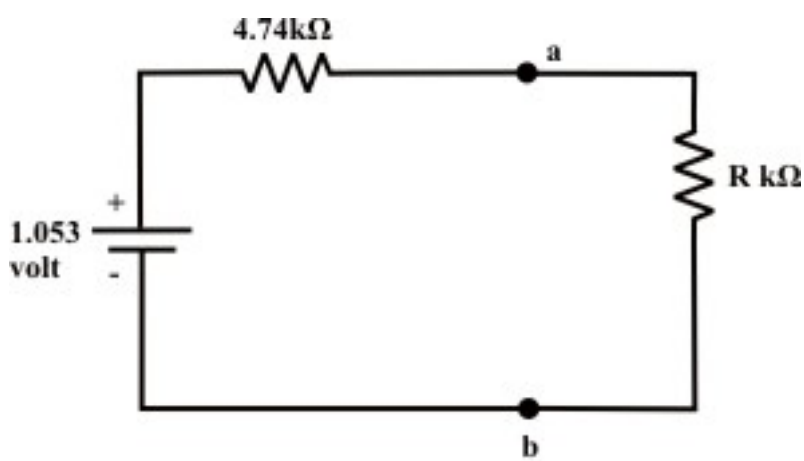

Fig. 8.11(b): Therenin equivalent circuit between the terminal 'a' and 'b'

Third measurement shows that the current in resistor R is given by $= \dfrac{1.053}{4.74 + R} = 0.108\,(mA) \Rightarrow R = 5\,k\,\Omega$. The voltage across the $5k\,\Omega$ resistor is $5 \times 0.108 = 0.54\,volt$

From the fourth measurement data, the current through $25k\Omega$ resistor is = $I = \frac{V_{Th}}{R_{Th}+R} = \frac{1.053}{(4.74+25)\times 10^3} = 0.0354\ ma$ and the corresponding voltage across the resistor $V_R = I \times R = 0.0354 \times 25 = 0.889V$.

Example-L.8.7 Applying Norton's theorem, calculate the value of R that results in maximum power transfer to the 6.2Ω resistor in fig.8.12(a). Find the maximum power dissipated by the resistor 6.2Ω under that situation.

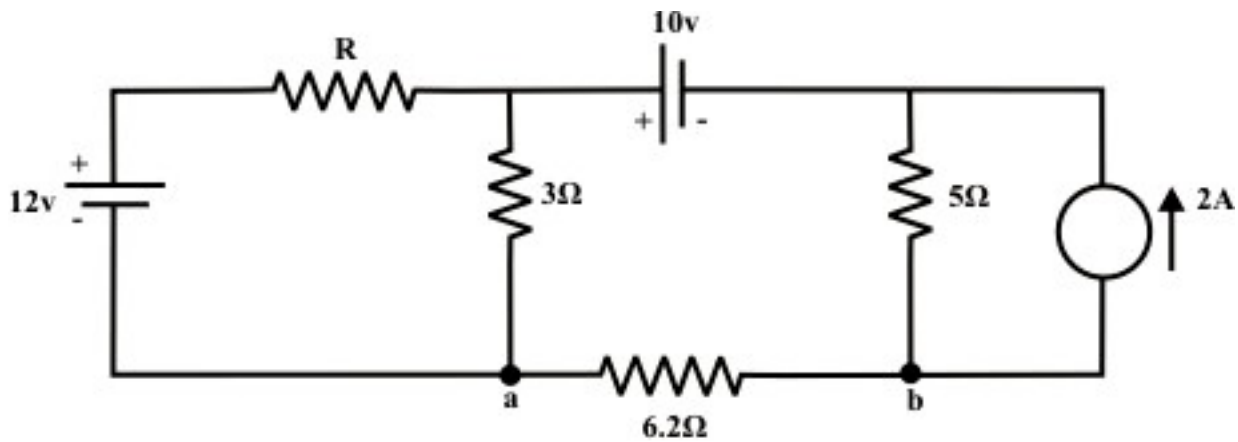

Fig. 8.12(a)

Solution:

Step-1: Short the terminals 'a' and 'b' after disconnecting the 6.2Ω resistor. The Norton's current I_N for the circuit shown in fig.8.12(b) is computed by using 'mesh-current' method.

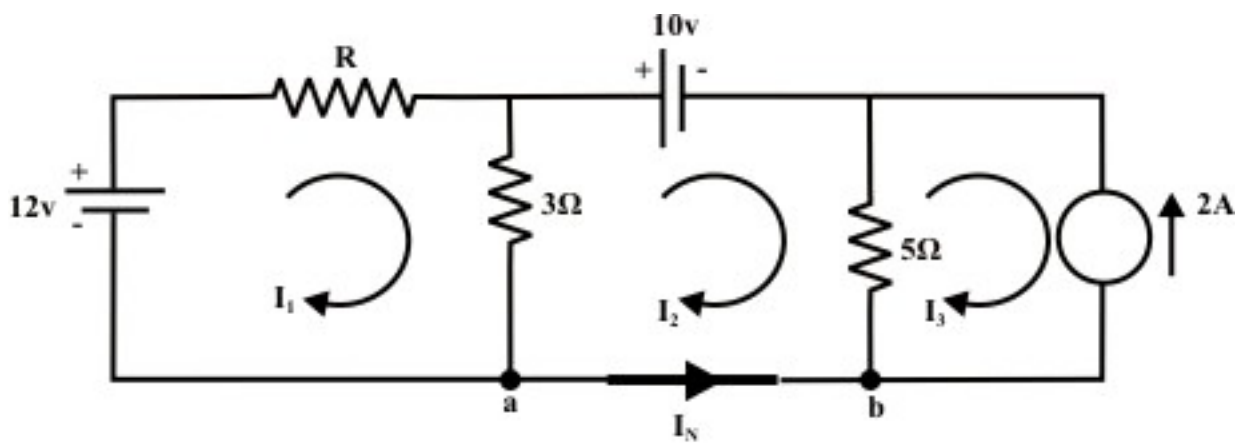

Fig. 8.12(b)

Loop-1:

$$12 - I_1 R - 3(I_1 - I_2) = 0 \tag{8.12}$$

Loop-2:

$$-10 - 5(I_2 - I_3) - 3(I_2 - I_1) = 0\ ,\quad note\ \ I_3 = -2\,A \tag{8.14}$$

Solving equations (8.12) and (8.14), we get

$I_1 = \dfrac{36}{15+8R}$; $I_2 = -\dfrac{24+20R}{15+8R}$ (-ve sign implies that the current is flowing from 'b' to 'a') and Norton's current $I_N = -I_2 = \dfrac{24+20R}{15+8R}$

Norton's resistance R_N is computed by replacing all sources by their internal resistances while the short-circuit across the output terminal 'a' and 'b' is removed. From the circuit diagram fig.8.12(c), the Norton's resistance is obtained between the terminals 'a' and 'b'.

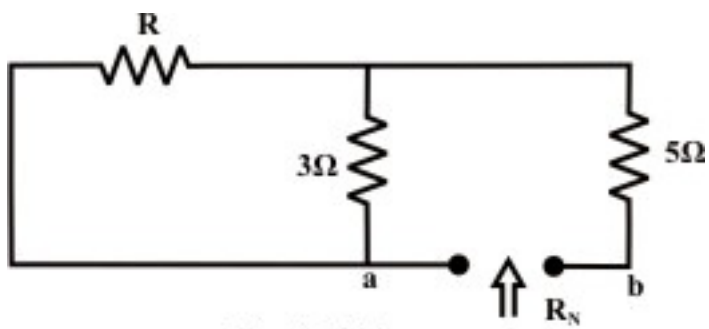

Fig. 8.12(c)

$$R_N = (R \| 3) + 5 = \frac{3R}{3+R} + 5 \tag{8.15}$$

Note that the maximum power will dissipate in load resistance when load resistance = Norton's resistance $R_N = R_L = 6.2\Omega$. To satisfy this condition the value of the resistance R can be obtained from equation (8.15), we get $R = 2\Omega$.. The circuit shown in fig.8.12(a) is now replaced by an equivalent Norton's current source (as shown in fig.L.8.12(d)) and the maximum power delivered by the given network to the load $R_L = 6.2\Omega$ is thus given by

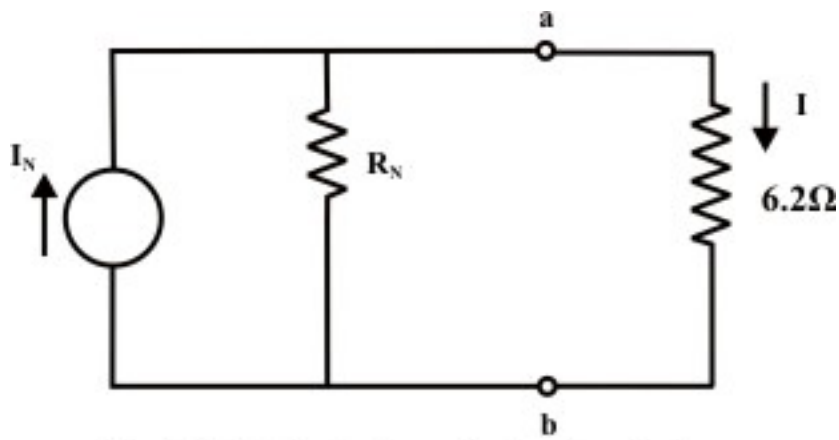

Fig. 8.12(d): Norton's equivalent circuit of original circuit

$$P_{\max} = \frac{1}{4} \times I_N^{\ 2} R_L = \frac{1}{4} \times \left(\frac{24 + 20R}{15 + 8R} \right)^2 \times R_L = 6.61\, watts$$

L.8.8 Test Your Understanding

[Marks: 60]

T.1 When a complicated dc circuit is replaced by a Thevenin equivalent circuit, it consists of one ------- in series with one --------- . [2]

T.2 When a complicated dc circuit is replaced by a Norton equivalent circuit, it consists of ------ in ----- with one -------. [2]

T.3 The dual of a voltage source is a ----------. [1]

T.4 When a Thevenin theorem is applied to a network containing a current source; the current source is eliminated by --------- it. [1]

T.5 When applying Norton's theorem, the Norton current is determined with the output terminals ----------, but the Norton resistance is found with the output terminals --------.and subsequently all the independent sources are replaced ----------. [3]

T.6 For a complicated circuit, the Thevenin resistance is found by the ratio of -------- voltage and ---------- current. [2]

T.7 A network delivers maximum power to the load when its -------- is equal to the ------ of circuit at the output terminals. [2]

T.8 The maximum power transfer condition is meaningful in ---------- and --------- systems. [2]

T.9 Under maximum power transfer conditions, the efficiency of the system is only ------ %. [1]

T.10 For the circuit in fig.8.13, find the voltage across the load resistance $R_L = 3\Omega$ using Thevenin theorem. Draw the Thevenin equivalent circuit between the terminals 'a' and

'b' when the load resistance R_L is disconnected. Calculate the maximum power delivered by the circuit to the load $R_L = 3\Omega$. [6]

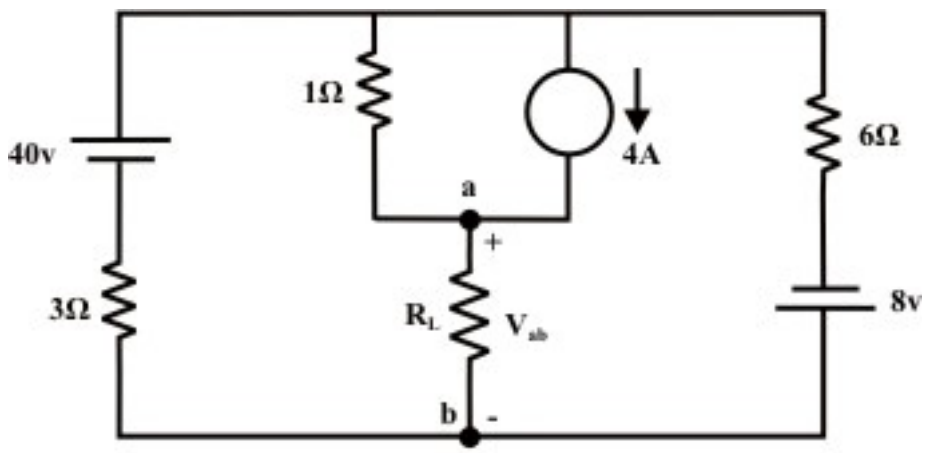

Fig. 8.13

(Ans. $V_{ab} = 18$ volt, $P_{\max} = 108\ W$)

T.11 Solve the problem given in T.10 applying Norton's theorem. [6]
(Ans. $I_N = 12\ A,\ R_N = 3\Omega$)

T.12 For the circuit in fig.8.14, calculate the value of R that results in maximum power transfer to the 10Ω resistor connected between (i) 'a' and 'b' terminals (ii) 'a' and 'c' terminals. Indicate the current direction through (a) a-b branch (b) a-c branch and their magnitudes. [6+6]

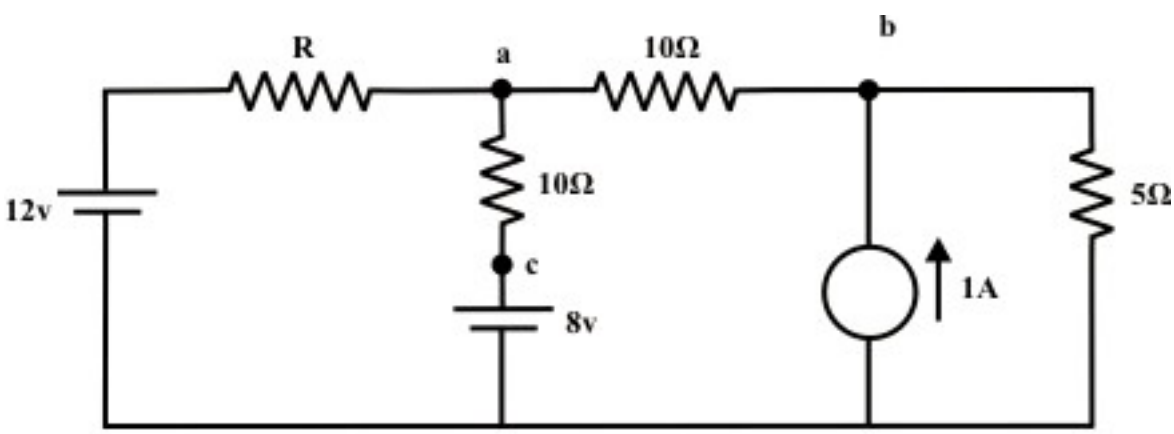

Fig. 8.14

(Ans. (i) $R = 10\Omega$, $I_{ab} = 250\,mA\ (a \to b)$ (ii) $R = 30\Omega,\ I_{ac} = 33.3\ mA\ (a \to c)$)

T.13 The box shown in fig.8.15 consists of a dc sources and resistors. Measurements are made at the terminals ‘a’ and ‘b’ and the results are shown in the table. Find the choice of ‘R’ that delivers maximum power to it and subsequently predict the reading of the ammeter under this situation. [6]

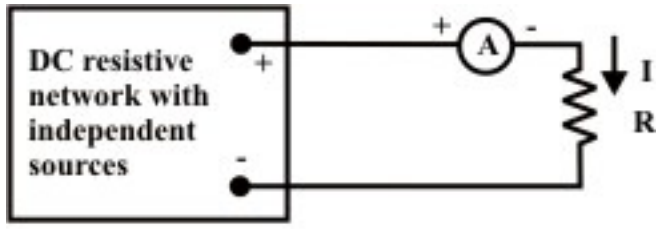

Fig. 8.15

Table

R	I
10Ω	$2\,A$
80Ω	$0.6\,A$

(Answer: $R = 20\Omega,\ P_{\max} = 45\,watts$)

T.14 For the circuit shown in fig.8.16, find the value of current I_L through the resistor $R_L = 6\Omega$ using Norton’s equivalent circuit and also write the Norton’s equivalent circuit parameters between the terminals $'A'$ *and* $'B'$. [7]

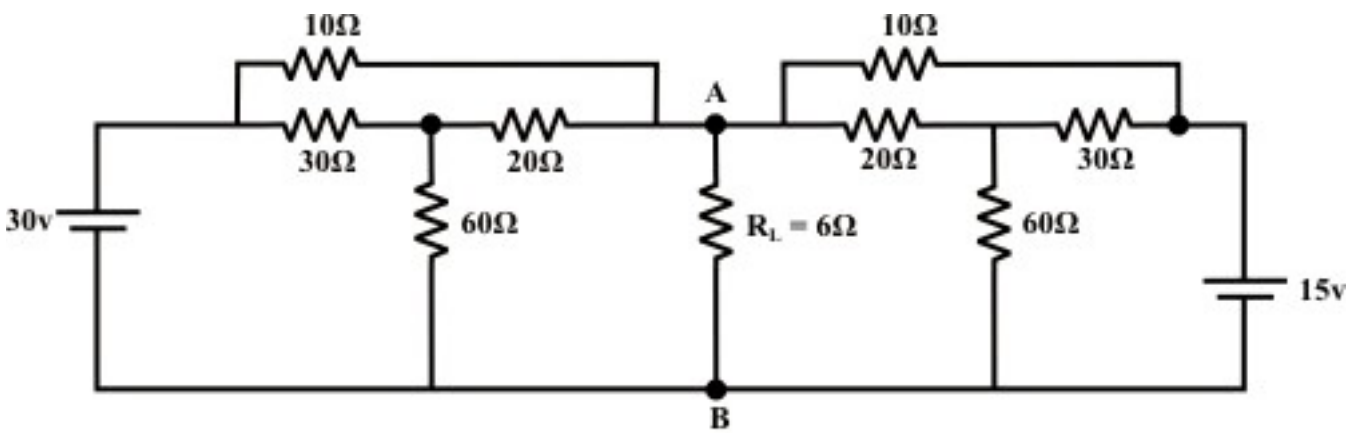

Fig. 8.16

(Ans. $I_L = 2.1\ A,\ I_N = 5.25\,A;\ R_N = 4\Omega$)

T.15 Find the values of design parameters R_1, R_2 *and* R_3 such that system shown in fig.17(a) satisfies the relation between the current I_L and the voltage V_L as described in

fig.8.17(b). Assume the source voltage $V_s = 12\,volt$ and the value of resistance R_2 is the geometric mean of resistances R_1 & R_3. [7]

(Ans. $R_1 = R_2 = R_3 = 0.5k\Omega$)

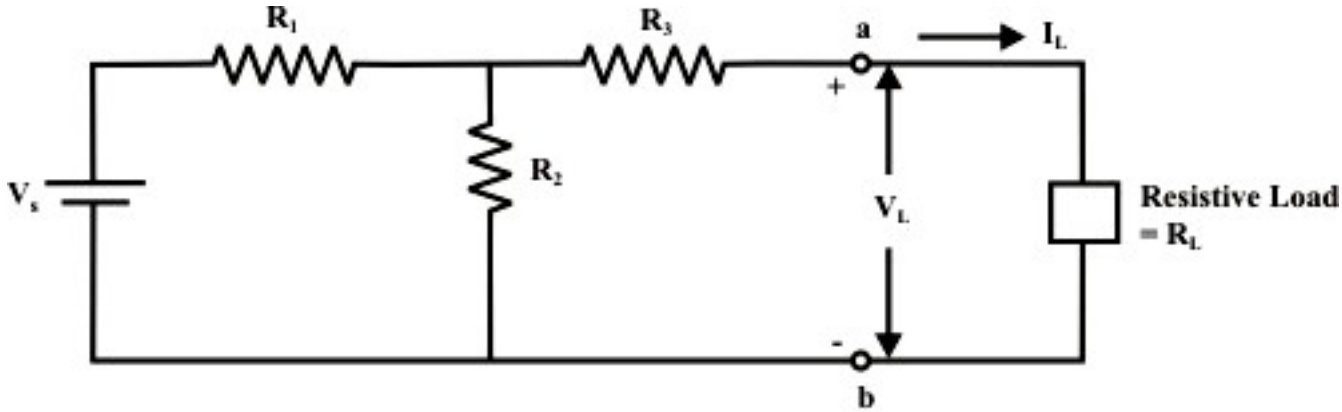

Fig. 8.17(a)

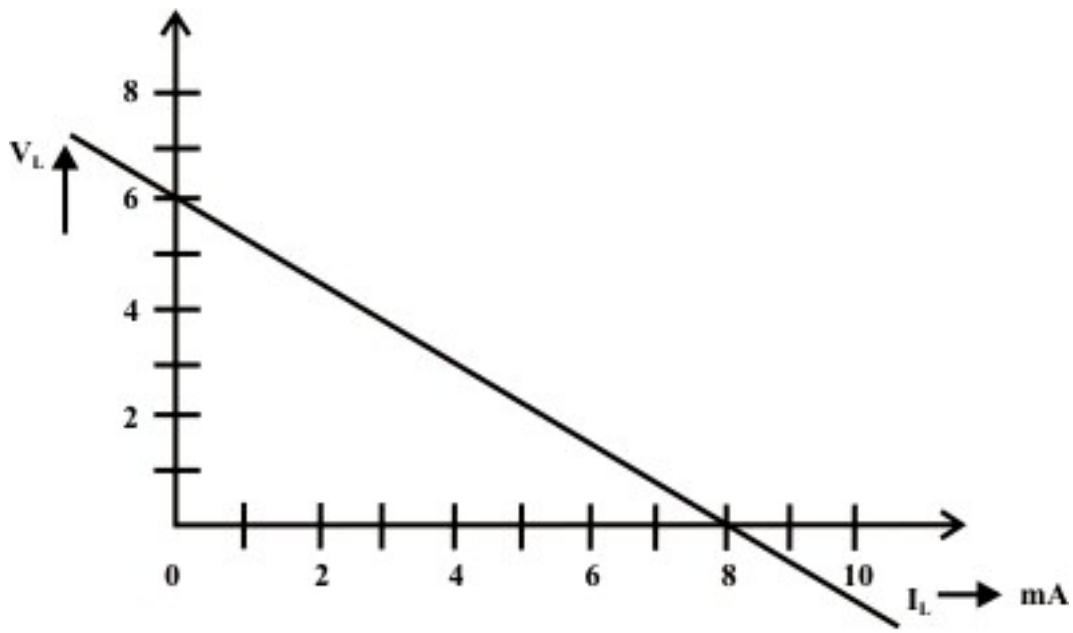

Fig. 8.17(b): Volt-Amp. characteristics at the terminals 'a' and 'b'

Module 2

DC Circuit

Lesson 9

Analysis of dc resistive network in presence of one non-linear element

Objectives

- To understand the volt (V) – ampere (A) characteristics of linear and nonlinear elements.
- Concept of load-line and analysis of dc resistive network having a single non-linear element using load-line analysis.

L.9.1 Introduction

The volt-ampere characteristic of a linear resistance is a straight line through the origin as in fig. 3.2 (see Lesson-3) but the characteristic for non-linear element for example, diodes or lamps is not linear as in fig. 3.3 (lesson-3). Temperature effects cause much non-linearity in lamps that are made of metals. Most materials resistance increases (or decreases) with rise (or fall) in temperature. On the other hand, most nonmetals resistance decreases or increases with the rise or fall in temperature. The typical tungsten lamp resistance rises with temperature. Note, as the voltage across the lamp increases, more power is dissipated and in turn rising the filament temperature. Further note, that the increments of voltage produce smaller increments of current that causes increase resistance in the filament element. Opposite effects can be observed in case of carbon filament lamp or silicon carbide or thermistor. Additional increments of voltage produce large increments of current that causes decrease resistance in the element. Fig.9.1 shows the characteristics of tungsten and carbon filaments.

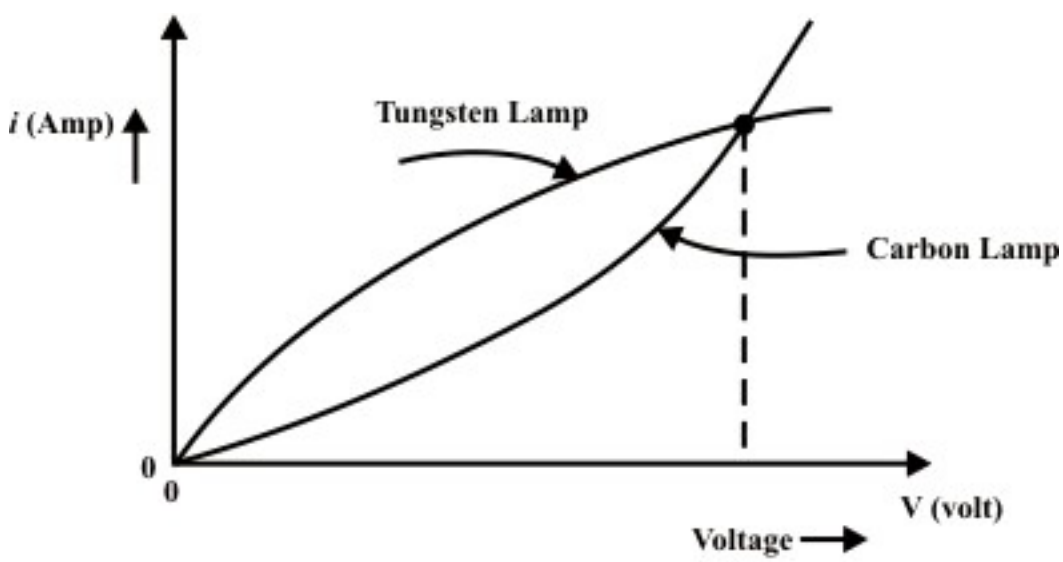

Fig. 9.1: Temperature effects produce two kinds of circuit nonlinearities

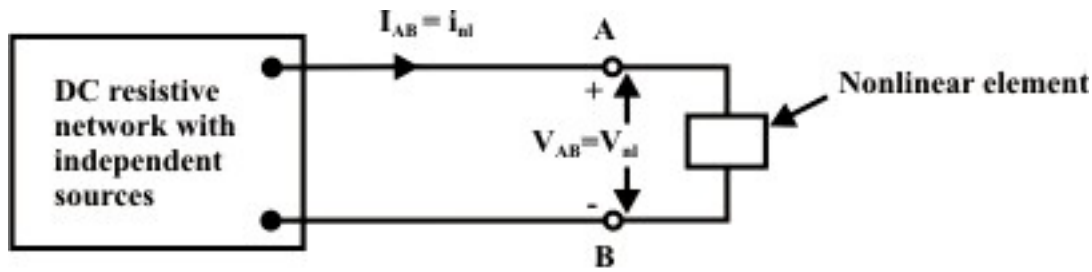

Fig. 9.2(a)

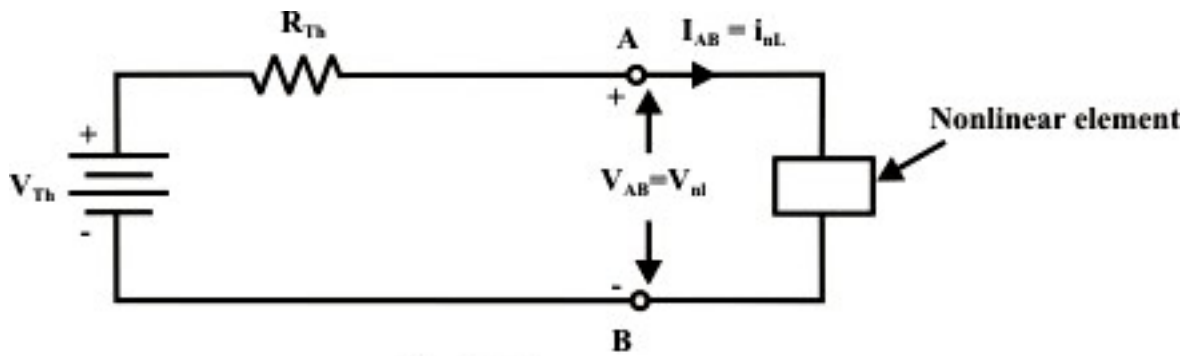

Fig. 9.2(b)

Let us consider a simple circuit shown in fig. L.9.2(a) that consists of independent sources, combination of linear resistances, and a nonlinear element. It is assumed that the nonlinear element characteristics either defined in terms of current ($i(t)$) (flowing through it) and voltage ($v_{nl}(t)$) (across the nonlinear element) relationship or *Voltage* ($v_{nl}(t)$) and *current* (i) relationships of nonlinear element can be expressed as mathematical expression or formula. For example, consider the actual (non-ideal) $V-I$ relationship of the typical diode can be expressed as $I = I_0\left(e^{V/a}-1\right)$, where '$a$' is constant (for germanium diode 'a'=0.026 and silicon diode 'a'=0.052). Assume that the network (fig.9.2(a)) at the terminals '*A and B*' is replaced by an equivalent Thevenin network as shown in fig. 9.2(b). From an examination of the figure one can write the following expression:

$V_{Th} = I_{AB} \times R_{Th} + V_{AB}$ *or*, $V_{Th} - I_{AB} \times R_{Th} = V_{AB} \Rightarrow$ Thevenin terminal voltage = load voltage.

If the nonlinear element characteristic is given (note, no any analytical expression is available) then one can adopt graphical method called load-line analysis to determine the branch variables ($I_{AB} = i_{nl}$ *and* $V_{AB} = v_{nl}$) of nonlinear element as shown in fig. L.9.2(a). This resulting solution is frequently referred to as the operating point (Q) for the nonlinear element characteristic (in the present discussion, we consider a nonlinear element is a resistor R_2). This method is quite simple and useful to analysis the circuit while the load has a nonlinear $V-I$ characteristic. It is very easy to draw the source characteristic using the intercepts at points $v(t) = V_{AB} = V_{Th}$, $i = i_{AB} = 0$ (*open circuit condition*) and $v(t) = V_{AB} = 0$, $i = i_{AB} =$

$\frac{V_{Th}}{R_{Th}} = I_N$ $(short-\ circuited\ at\ A\ \&\ B\ terminals)$ in two axes. It is obvious that the values of voltage (V_{AB}) and current (I_{AB}) at the terminals of the source are exactly same as the voltage across and current in the load as indicated in fig. 9.2(a). The point of intersection of the load and the source characteristic represents the only condition where voltage and current are same for both source and load elements. More-specifically, the intersection of source characteristic and load characteristic represents the solution of voltage across the nonlinear element and current flowing through it or operating point (Q)of the circuit as shown in fig.9.2(c). Application of load-line analysis is explained with the following examples.

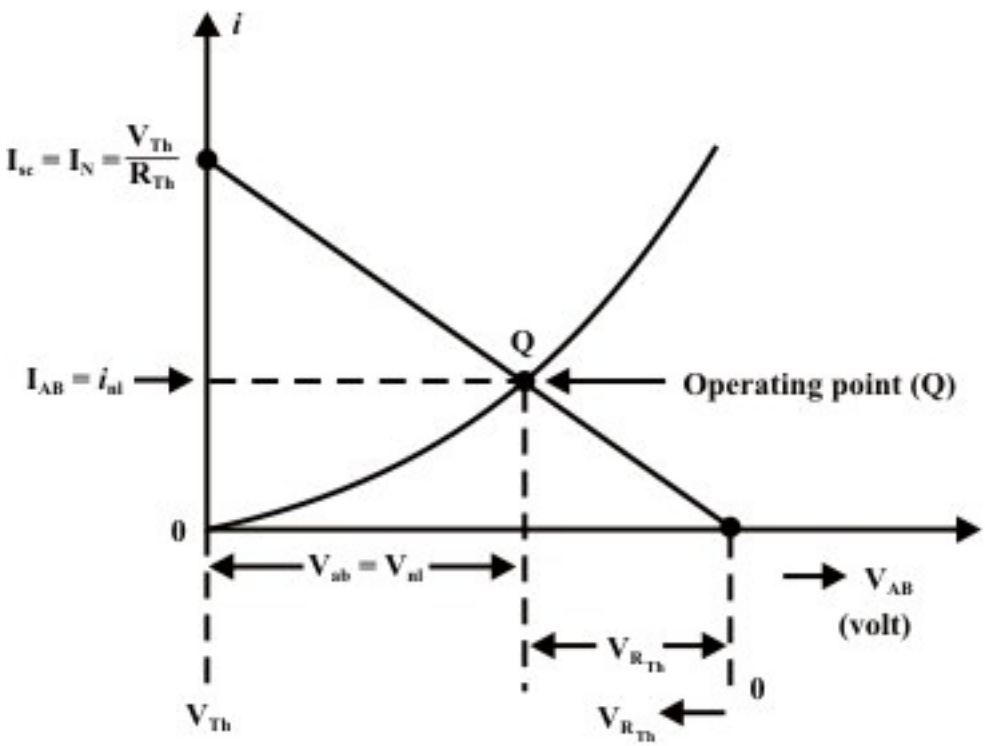

Fig. 9.2 (c)

L.9.3 Application of load-line method

Example-L.9.1: The volt-ampere characteristic of a non-linear resistive element connected in the circuit (as shown Fig.9.3(a)) is given in tabular form.

Table: volt-ampere characteristic of non-linear element

V_{nl}	0	2	4	6	8	10	12	14	15
I_{nl}	0	0.05	0.1	0.2	0.6	1.0	1.8	2.0	4.0

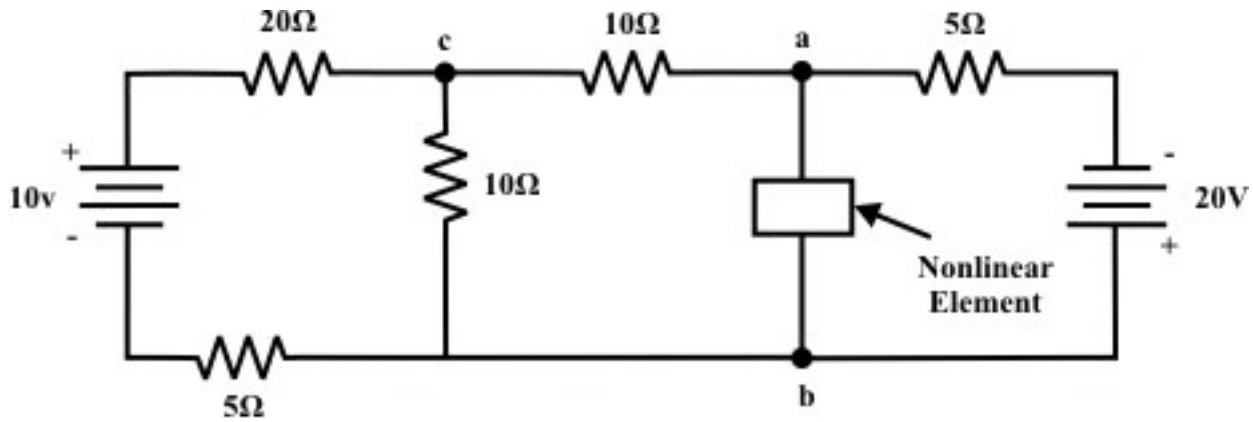

Fig. 9.3 (a) A single non-linear element in the dc resistive network

(i) Calculate the voltage drop V_{ab} across the non-linear element.

(ii) For the same circuit, if the non-linear element is replaced by a linear resistance R_L, find the choice of R_L that will absorb maximum power delivered by the independent sources.

Solution:

(i) The Thevenin equivalent circuit across the terminals "$'a'$ *and* $'b'$ of fig.9.3(b) can be obtain using 'node-voltage' method (or one can apply any method to find V_{Th}).

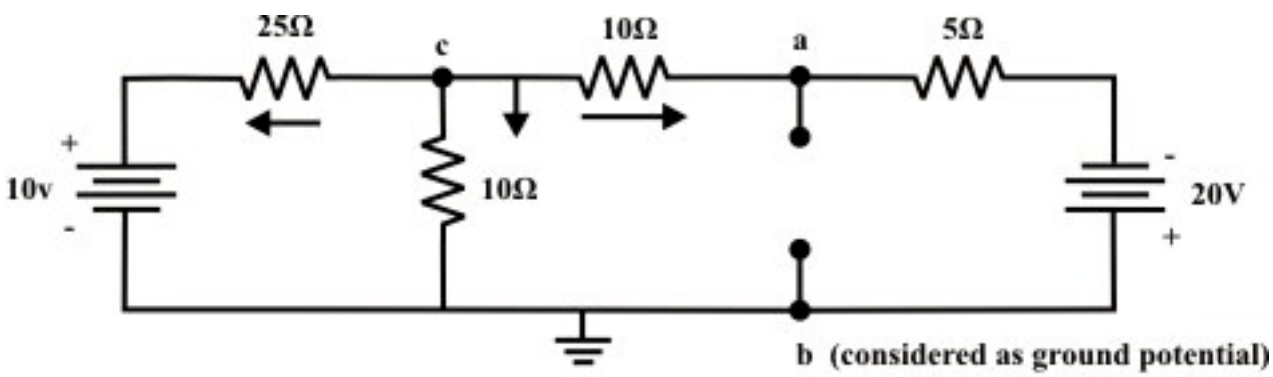

Fig. 9.3 (b)

Node voltage at 'c'

$$\frac{V_c-10}{25}+\frac{V_c}{10}+\frac{V_c+20}{15}=0 \Rightarrow V_c=-4.52\,volt.$$

Current through 'c-a' branch = $\frac{V_c-(-20)}{15}=\frac{-4.52+20}{15}=1.032\,A$

Voltage across the terminals 'a' and 'b'=Thevenin equivalent voltage (V_{Th}) = $-4.52-10\times1.032=-14.48\,volt$. (note, point 'b' is higher potential than the point 'a').

Thevenin resistance (R_{Th}):

$$R_{Th} = \left[\left(25 \| 10\right) + 10\right] \| 5 = \left(7.14 + 10\right) \| 5 = 3.87\,\Omega$$

Thevenin equivalent circuit for the network as shown in fig.9.3(b) is given below:

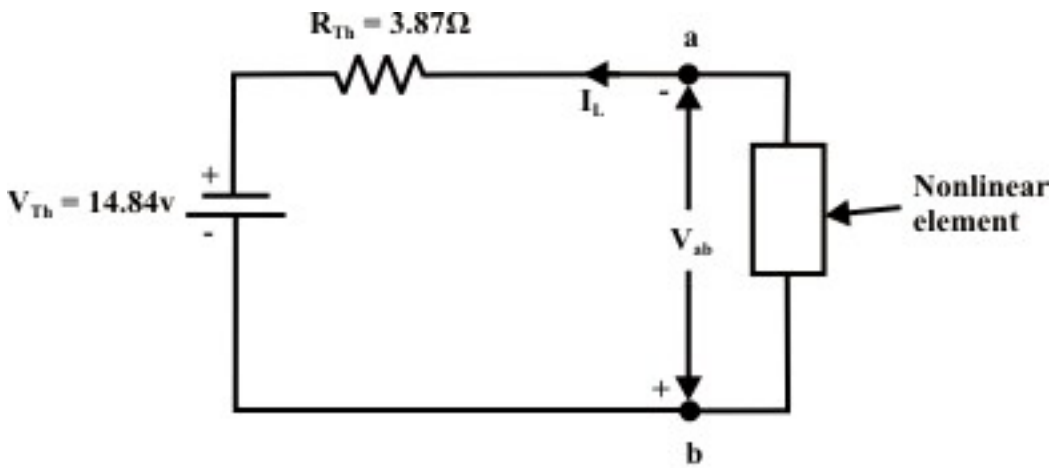

Fig. 9.3(c): Therenin equivalent circuit of fig. 9.3 (b)

To construct the source characteristic (load-line), we examine the extreme conditions under which a given source may operate. If the nonlinear load is removed (i.e. terminal 'a' and 'b' is open-circuited), the terminal voltage will be equal to the Thevenin voltage (V_{Th}). On the other hand, if the nonlinear resistance is short-circuited, the current flow through the 'a' and 'b' terminal is $I_{sc} = I_N = \dfrac{V_{Th}}{R_{Th}}$.

The operating point of the circuit is found from the intersection of source characteristic (load-line) and load characteristic curves as shown in fig.9.3(d). From this graph (see fig.9.3(d)), one can find the current flowing through the nonlinear element $I_L = 1.15\,A$ and the voltage across the nonlinear element is $V_{ab} = 10.38\ Volt$.

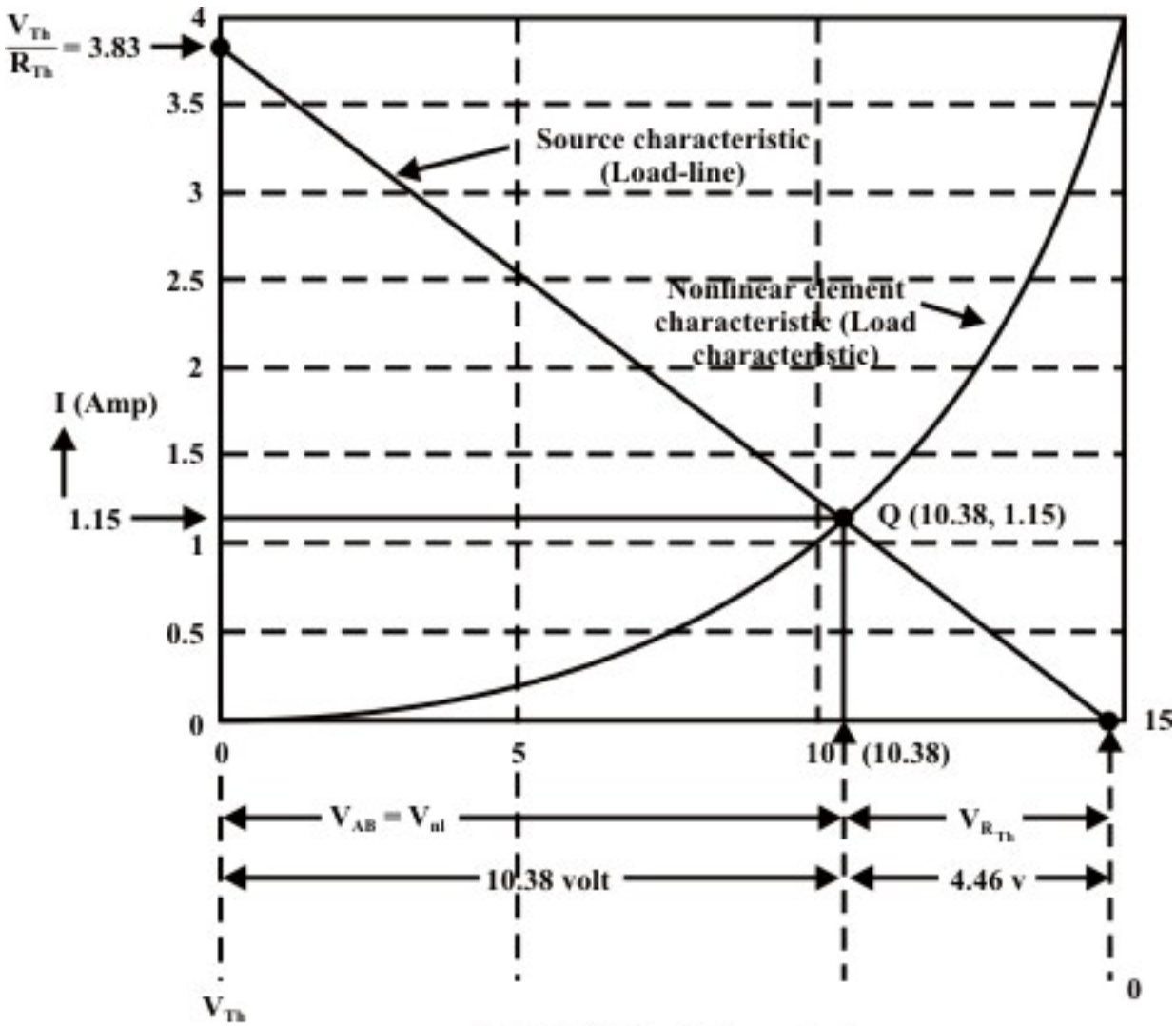

Fig. 9.3 (d): Load-line analysis

(ii) If the nonlinear resistance is replaced by a linear resistance, the maximum power transfer condition is achieved when the linear load resistance $R_L = R_{Th} = 3.87\,\Omega$. Under such condition, the network will deliver the maximum power to the load and the corresponding maximum power is given by $P_{\max} = \frac{V_{Th}^{\ 2}}{R_{Th}} = \frac{14.84^2}{4 \times 3.87} = 14.23\ W$

Remarks: The primary limitation of this method (load-line analysis) is accuracy, due to its graphical nature and thus it provides an approximate solution of the circuit.

Example-L.9.2: Fig.9.4(a) shows that a nonlinear element (diode) is included in the circuit.

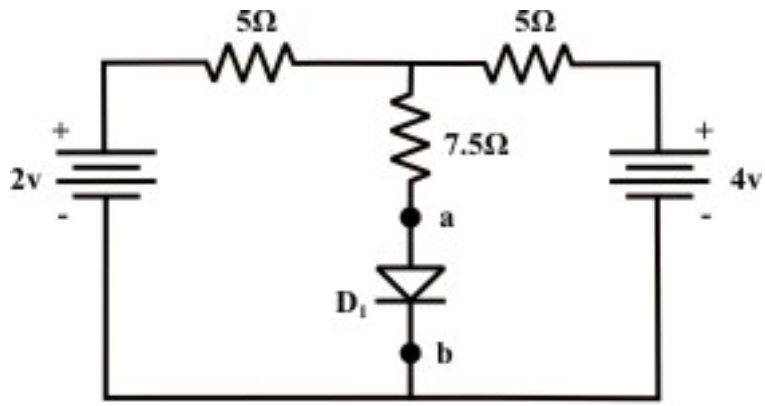

Fig. 9.4 (a)

Calculate the current flowing through the diode, voltage across the diode and the power dissipated in the diode using (i) load-line analysis (graphical) technique (ii) analytical method. The volt-ampere characteristic of the diode is given by the expression

$$I = I_0\left(e^{V_d/a} - 1\right) = 10^{-6}\left(e^{V_d/0.026} - 1\right) \qquad (9.1)$$

Solution:

(i) Load-line analysis method

The volt-ampere characteristics of the diode are given in tabular form using the equation (9.1).

Table: V_d = **voltage across the diode in volt,** I = **current in diode in mA**

V_d	0 v	0.1 v	0.2 v	0.25 v	0.3 v	0.32 v	0.35 v
I	0 mA	0.046mA	2.19mA	15mA	102.6mA	268mA	702mA

Step-1: Thevenized circuit

Remove the nonlinear element (diode) and replace the rest of the circuit (as shown in fig.9.4(b)) by a thevenin equivalent circuit (see fig.9.4(c)).

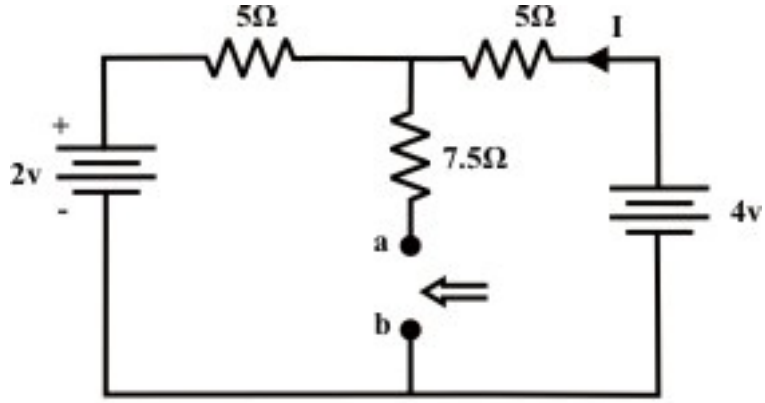

Fig. 9.4 (b)

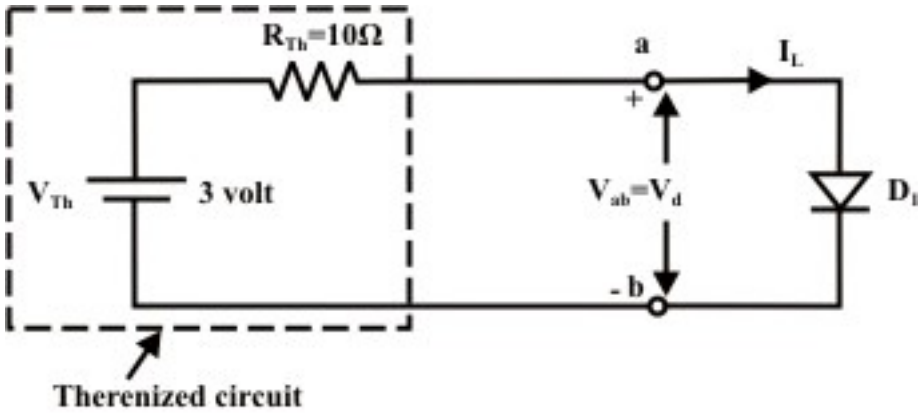

Fig. 9.4(c) Thevenin equivalent circuit of fig. L.9.4(b)

Applying KVL around the closed path of the circuit as shown in fig.9.4(b), we get

$$4-(5+5)\times I-2=0 \Rightarrow I=\frac{2}{10}=0.2\,A$$

$V_{Th}=4-5\times 0.2=3\,volt.;\quad R_{Th}=(5\|5)+7.5=10\,\Omega$

The equivalent Thevenin circuit is shown in fig.9.4(c).

Step-2: Load-line analysis

Draw the source and load (diode) characteristics on a same graph paper as shown in fig.L.9.4(d). Note that the Thevenin parameters obtained in step-1 are used to draw the source characteristic.

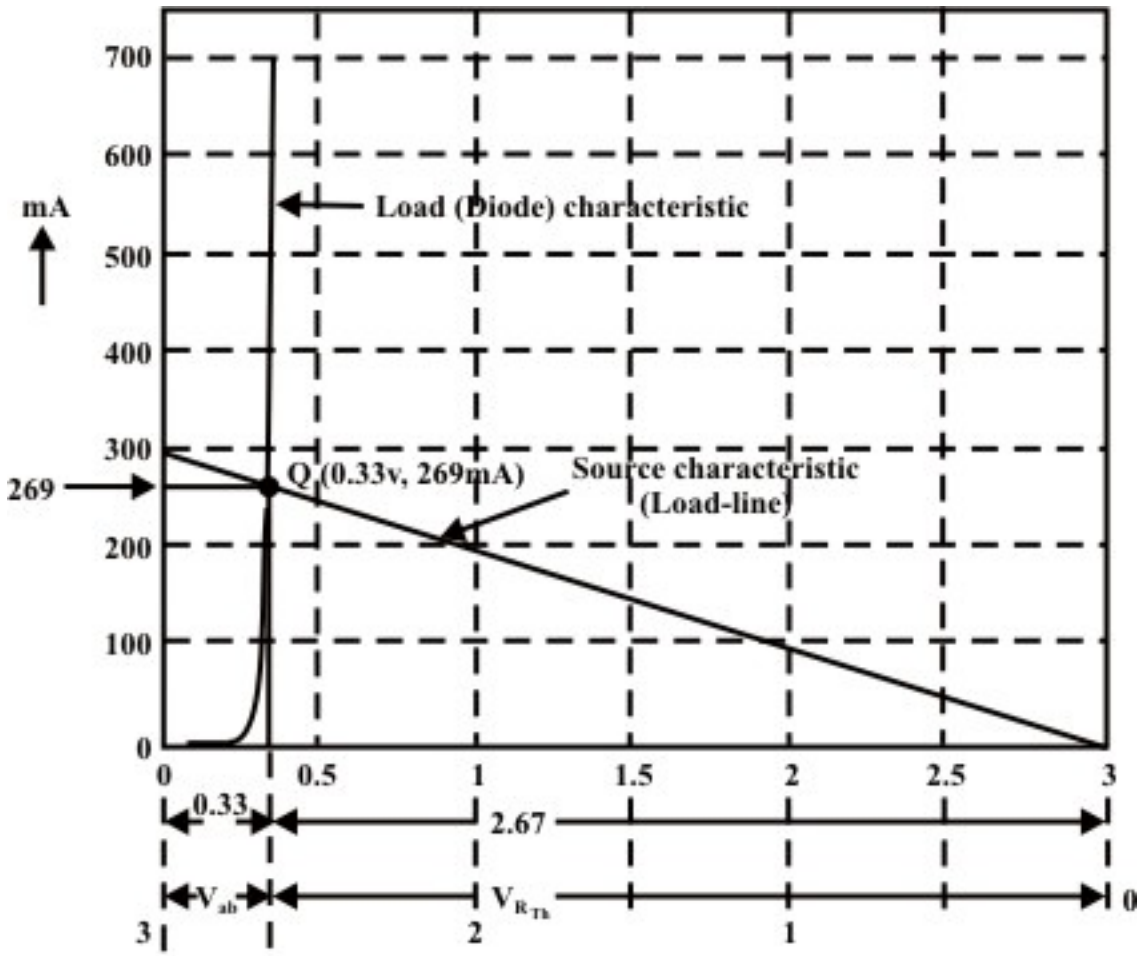

Fig. 9.4 (d): Load-line analysis

The operating point Q in fig.9.4(d) provides the information of the following quantities:

Voltage across the diode = $V_d = V_{ab} = 0.33\,volt.$

Current flowing through the diode = $I_L = 269\,mA$

Power dissipated in the diode = $P_{diode} = V_{ab} \times I_L = 88.77\,mW$

(ii) Analytical method

KVL equation around the loop of fig.L.9.4(c) is written as

$$V_{Th} - I_L \times R_{Th} - V_d = 0 \tag{9.2}$$

$$V_{Th} = I_L \times R_{Th} + V_d \quad \text{or} \quad 3 = 10^{-5}\left(e^{V_d \times 38.46}\right) + V_d \quad (note\ V_{Th} = 3\,V, R_{Th} = 10\,\Omega)$$

The nonlinear algebraic equation can be solved by using any numerical technique. To solve this equation, one can consider the Newton-Raphson method to the above equation. The above equation is rewritten in the following form

$$f(V_d) = 10^{-5}\left(e^{V_d \times 38.46}\right) + V_d - 3 \tag{9.3}$$

$$\dot{f}(V_d) = 1 + 0.385 \times 10^{-3} \times e^{38.46 \times V_d} \tag{9.4}$$

To solve V_d, Newton's formula is used

$$V_{d(new)} = V_{d(old)} - \left(\frac{f(V_d)}{\dot{f}(V_d)} \right)_{V_d = V_{d(old)}} \tag{9.5}$$

Initial guess of V_d is assumed as $V_{d(old)} = 0.36V$. The final value of V_d is obtained after four iterations and they are shown below.

Iteration	$V_{d(old)}$	$V_{d(new)}$
1.	0.36 v	0.3996 v
2.	0.3996 v	0.3886 v
3.	0.3886 v	0.3845 v
4.	0.3845 v	0.3842 v

Using equation (9.2), we get $I_L = \frac{V_{Th} - V_d}{R_{Th}} = \frac{3 - 0.3842}{10} = 261.58\,mA$ and power dissipated in diode $P_{diode} = V_{ab} \times I_L = 0.3842 \times 261.58 = 100.5\,mW$.

L.9.4 Test your understanding

(Marks: 30)

T.1 The volt-ampere characteristic of a unknown device (T) is shown in fig.9.5(a) and it is connected to a resistive circuit of fig.9.5(b).

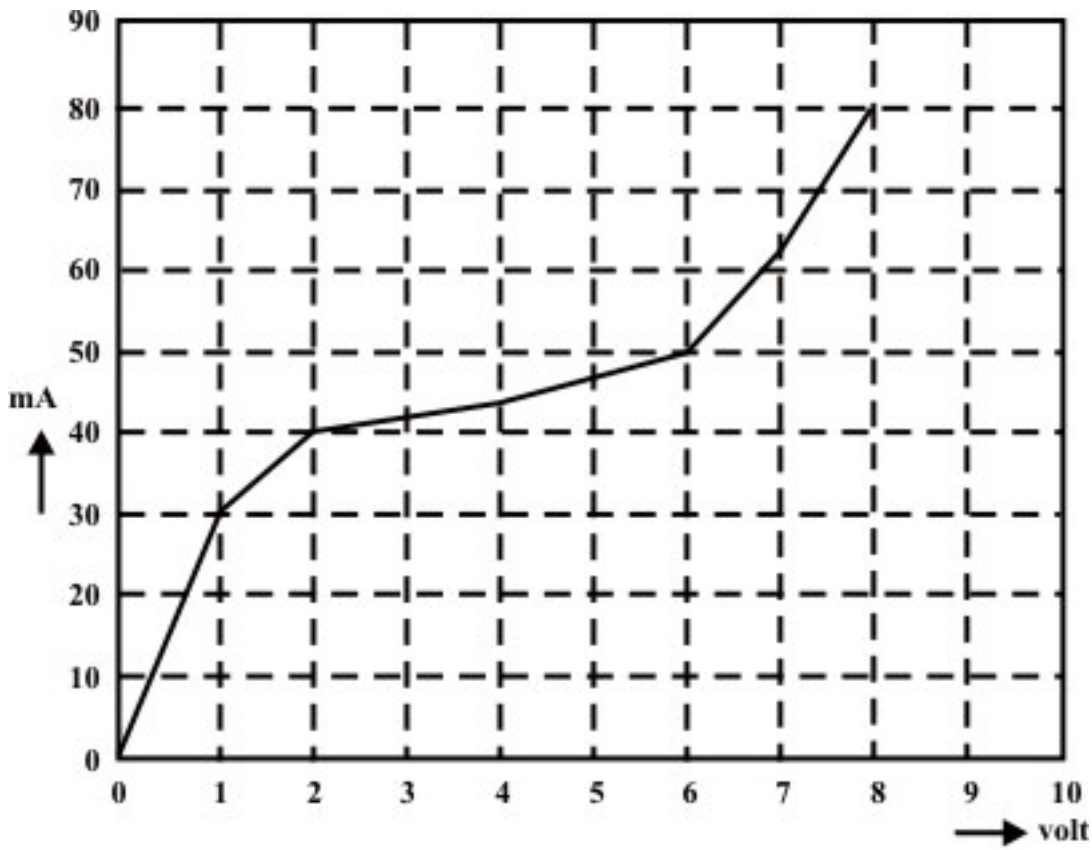

Fig. 9.5 (a): Volt-ampere characteristic of unknown device

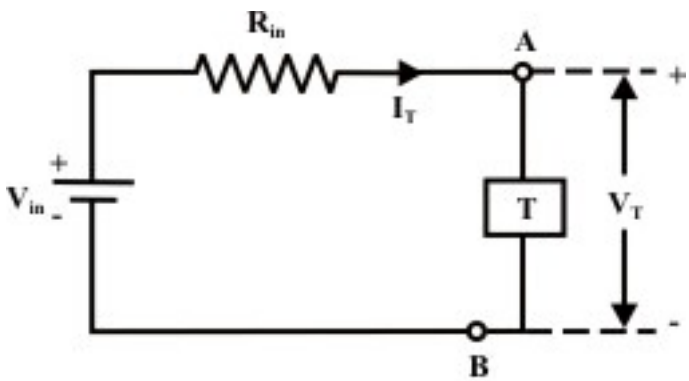

Fig. 9.5 (b)

(i) If $V_{in} = 10V$, *and* $R_{in} = 150\Omega$, plot the source characteristics on the voltage-current axes. [3]

(ii) Indicate the operating point on the graph and estimate the values of I_T *and* V_T (ans. $I_T = 43mA$, *and* $V_T = 3.7V$) [3]

T.2 A Thermistor with the volt-ampere characteristic (see fig.9.6(a)) given below is connected into one arm of a bridge as shown in the circuit of fig.9.6(b).

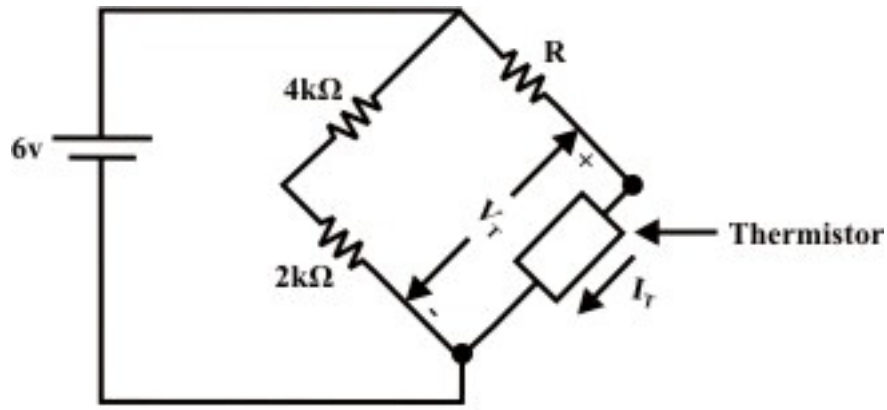

Fig. 9.6 (a)

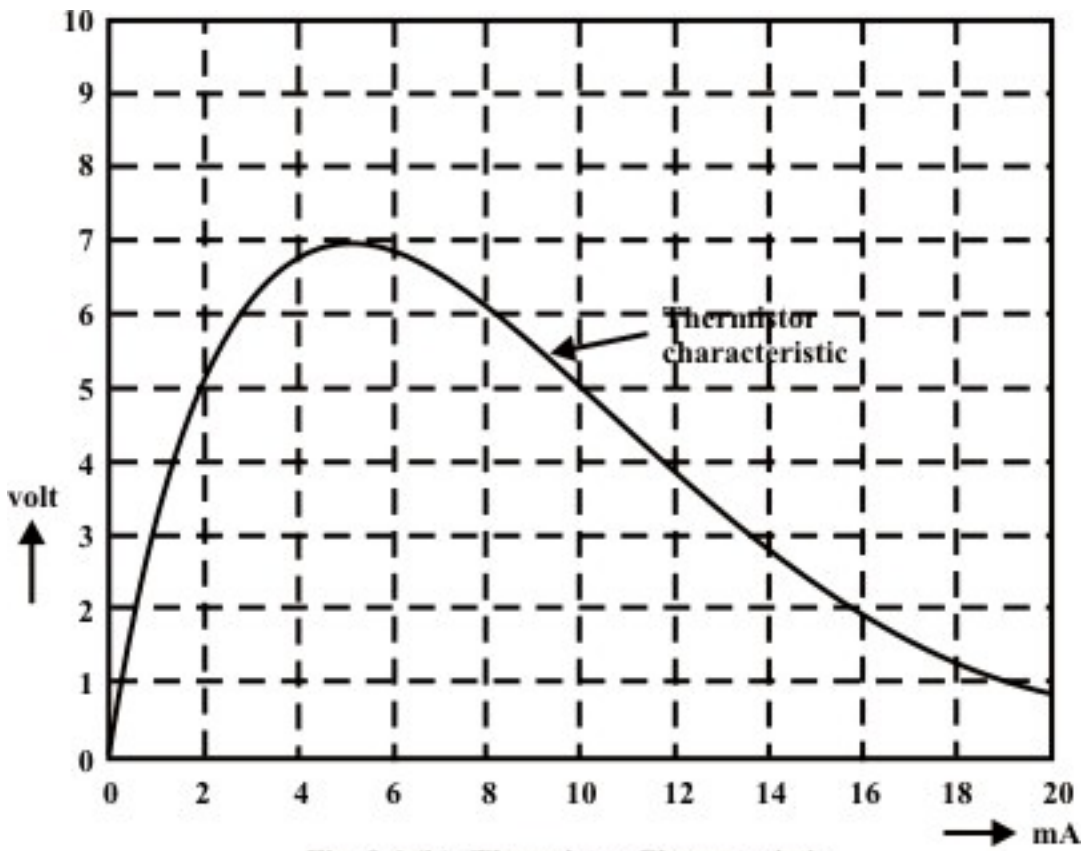

Fig. 9.6 (b): Thermistor Characteristic

(i) Determine the value of R so that the thermistor operation point is at $V_T = 5\,Volt\ and\ I_T = 2\,mA$. Justify the answer using the load-line analysis technique. (ans. $R = 0.5\,k\Omega$) [5]

(ii) Find the new operating point of the thermister when $R = 300\,\Omega$. Subsequently, compute the power dissipated by the thermistor.

(Ans. 5.3 V; 2.4 mA and 12.7 mW) [5+2]

T.9.3 The diode whose volt-ampere characteristic is given by analytical expression $I = I_0\left(e^{V_d/a} - 1\right) = 10^{-6}\left(e^{V_d/0.026} - 1\right)$ is used in the circuit of fig.9.7.

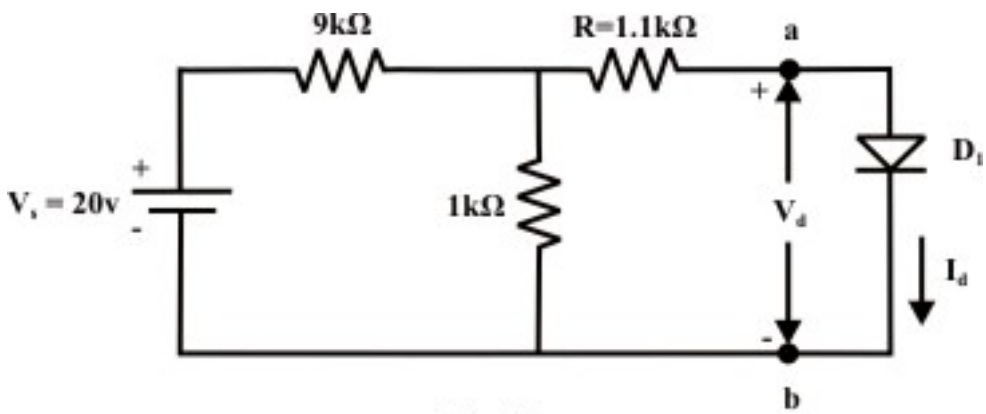

Fig. 9.7

Using analytical method, determine the following

(i) the diode current I_d , voltage V_d and power dissipated by diode. [5]

(ii) the diode voltage for each case while the supply voltage (V_s) is changed in succession to 30 V, 40 V and 50 V respectively. [7]

Module 3

R-L & R-C Transients

Lesson 10

Study of DC transients in R-L and R-C circuits

Objectives

- Definition of inductance and continuity condition for inductors.
- To understand the rise or fall of current in a simple series $R-L$ circuit excited with dc source.
- Meaning of '$Time\ Constamt\,(\tau)$' for $R-L$ circuit and explain its relationship to the performance of the circuit.
- Energy stored in an inductor
- Definition of capacitance and Continuity condition for capacitors.
- To understand the rise or fall voltage across the capacitor in a simple series $R-C$ circuit excited with dc source.
- Meaning of '$Time\ Constamt\,(\tau)$' for $R-C$ circuit and explain its relationship to the performance of the circuit.
- Energy stored in a capacitor

L.10.1 Introduction

So far we have considered dc resistive network in which currents and voltages were independent of time. More specifically, Voltage (cause $\rightarrow$ input) and current (effect $\rightarrow$ output) responses displayed simultaneously except for a constant multiplicative factor R ($V = R \times I$). Two basic passive elements namely, inductor (L) and capacitor (C) are introduced in the dc network. Automatically, the question will arise whether or not the methods developed in lesson-3 to lesson-8 for resistive circuit analysis are still valid. The voltage/current relationship for these two passive elements are defined by the derivative (voltage across the inductor $v_L(t) = L\dfrac{di_L(t)}{dt}$, where $i_L(t)$=current flowing through the inductor ; current through the capacitor $i_C(t) = C\dfrac{dv_C(t)}{dt}$, $v_C(t)$= voltage across the capacitor) or in integral form as $i_L(t) = \dfrac{1}{L}\int_0^t v_L(t)dt + i_L(0)$ *or* $v_C(t) = \dfrac{1}{C}\int_0^t i(t)dt + v_C(0)$ rather than the algebraic equation ($V = IR$) for all resistors. One can still apply the KCL, KVL, Mesh-current method, Node-voltage method and all network theorems but they result in differential equations rather than the algebraic equations that we have considered in resistive networks (see Lession-3 to lesson-8).

An electric switch is turned on or off in some circuit (for example in a circuit consisting of resistance and inductance), transient currents or voltages (quickly changing current or voltage) will occur for a short period after these switching actions. After the transient has ended, the current or voltage in question returns to its steady state situation (or normal steady value). Duration of transient phenomena are over after only a few micro or milliseconds, or few seconds or more depending on the values of circuit parameters (like $R, L, and\ C$).The situation relating to the sudden application of dc voltage to circuits possessing resistance (R), inductance (L), and capacitance (C) will

now be investigated in this lesson. We will continue our discussion on transients occurring in a dc circuit. It is needless to mention that transients also occur in ac circuit but they are not included in this lesson.

L.10.2 Significance of Inductance of a coil and dc transients in a simple R-L circuit

Fig.10.1 shows a coil of wire forming an inductance and its behavior is to resist any change of electric current through the coil. When an inductor carries current, it produces a certain amount of magnetic flux (Φ) in the core or space around it. The product of the magnetic flux (Φ) and the number of turns of a coil (an inductor) is called the 'flux linkage' of the coil.

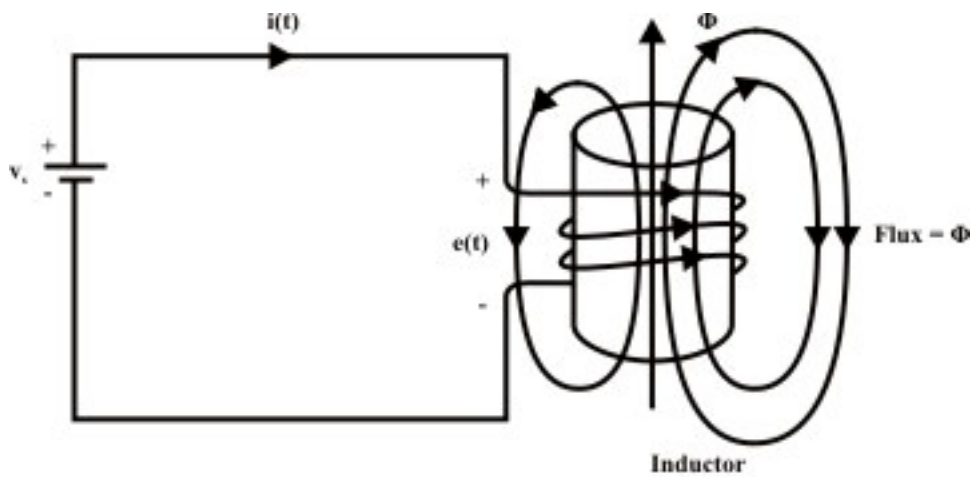

Fig. 10.1

Considering the physical fact that the voltage across the coil is directly proportional to the rate of change of current through the inductor and it is expressed by the equation

$$emf = e(t) = L\frac{di(t)}{dt} \Rightarrow L = \frac{e(t)}{di(t)/dt} \tag{10.1}$$

where L is the constant of proportionality called inductance of coil and it is measured in $\frac{volt-second}{ampere} = henry$ (H). The direction of induced emf is opposite to that of current increases or decreases (Lenz's Law)

$$e(t) = -L\frac{di(t)}{dt} \tag{10.2}$$

Let us assume that the coil of wire has $'N'$ turns and the core material has a relatively high permeability (or magnetic path reluctance is very low), so that the magnetic flux (Φ) produced due to current flowing through the coil is concentrated within the core area. The basic fundamental principle according to Faraday, the changing flux through the coil creates an induced emf (e) and it is expressed as

$$e(t) = -N\frac{d\Phi(t)}{dt} \tag{10.3}$$

In words, Faraday's law states that the voltage induced in a coil (inductor) is proportional to the number of turns that the coil has, and also to the rate of change of the magnetic flux passing through its coils. From equations (10.2) and (10.3), one can write the following relation

$$L = \frac{N\, d\Phi(t)}{di} = \frac{change\ in\ \ flux\ linkage}{change\ \ in\ \ current} = \frac{N\,\Phi}{I} \tag{10.4}$$

The inductance of a coil can also be defined as flux (Φ) linkage per unit of current flowing through the coil and it is illustrated through numerical example.

Example-L.10.1: Consider two coils having the same number of turns 'N'. One coil is wrapped in a nonmagnetic core (say, air) and the other is placed on a core of magnetic material as shown in fig.10.2. Calculate the inductances of both coils for same amount of current flowing through them.

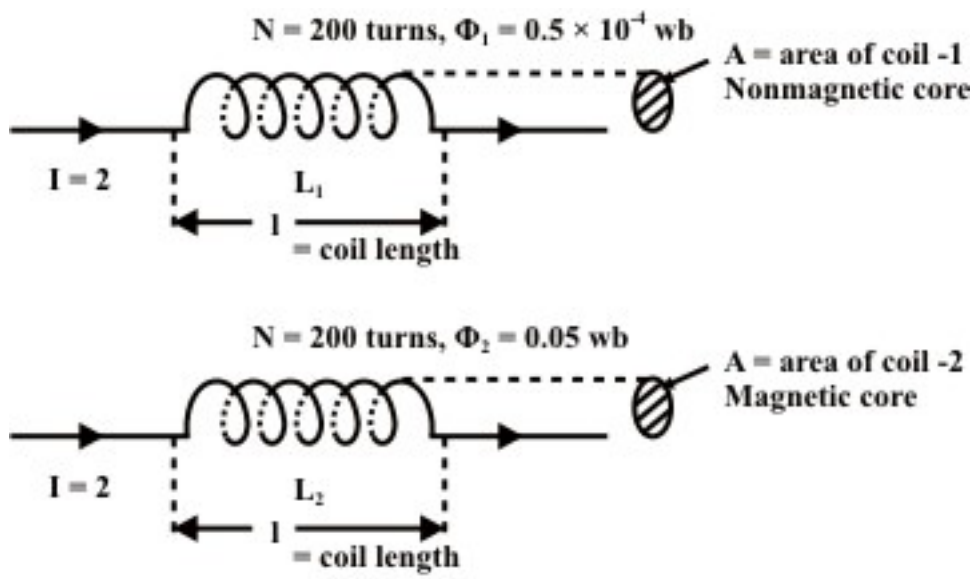

Fig. 10.2: Inductance of coil depends on the surrounding media

Case-A: Nonmagnetic material

Inductance of nonmagnetic material = $L_1 = \frac{N\,\Phi_1}{I} = \frac{200\times(0.5\times10^{-4})}{2} = 5\,mH$

Case-B: Magnetic material

Inductance of magnetic material $L_2 = \frac{N\times\Phi_2}{I} = \frac{200\times(0.05)}{2} = 5H$ (Note: $L_2 > L_1$)

L.10.2.1 Inductance calculation from physical dimension of coil

A general formula for the inductance of a coil can be found by using an equivalent *Ohm's law* for magnetic circuit and the formula for reluctance. This topic will be discussed in detail in Lesson-21. Consider a solenoid-type electromagnet/toroid

with a length much greater than its diameter (at least the length is ten times as great as its diameter). This will produce an uniform magnetic field inside the toroid. The length 'l' of a toroid is the distance around the center axis of its core , as indicated in fig.10.3 by dotted line. Its area 'A' is the cross-sectional area of the toroid, also indicated in that figure.

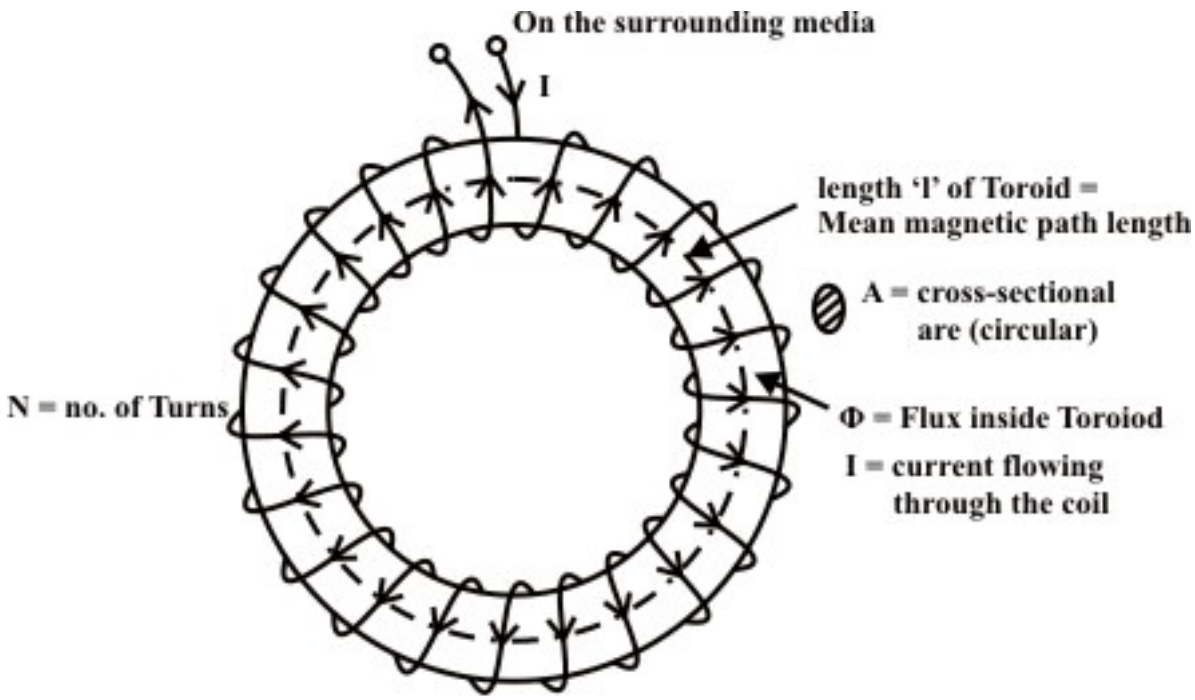

Fig. 10.3: A toroidal inductor

Appling ampere-circuital law for magnetic circuit (see Lesson-21) one can write the following relation

$$N\,I = H\,l \Rightarrow H = \frac{N\,I}{l}\,At/m \tag{10.5}$$

We know, flux is always given by the product of flux density (B) and area (A) through which flux density ids uniform. That is,

$$\Phi = B \times A = \mu\ H\ A = \mu \frac{N\,I}{l} A \quad (\ note,\ \mu = \mu_0 \times \mu_r\ ) \tag{10.6}$$

where $B = \mu H$ and H is the uniform field intensity around the mean magnetic path length 'l'. Substituting the equation (10.6) into the defining equation for inductance, equation (10.4) gives

$$L = \frac{N\,\Phi}{I} = \frac{\mu\,N^2\,I\,A}{I\,l} = \frac{\mu\,N^2\,A}{l} \tag{10.7}$$

Remark-1: The expression (10.7) is derived for long solenoids and toroids, computation of inductance is valid only for those types.

L.10.2.2 Continuity condition of Inductors

The current that flows through a linear inductor must always be a continuous. From the expression (10.1), the voltage across the inductor is not proportional to the current flowing through it but to the rate of change of the current with respect to time, $\frac{di(t)}{dt}$. The voltage across the inductor (v_L) is zero when the current flowing through an inductor does not change with time. This observation implies that the inductor acts as a short circuit under steady state dc current. In other words, under the steady state condition, the inductor terminals are shorted through a conducting wire. Alternating current (ac), on the other hand, is constantly changing; therefore, an inductor will create an opposition voltage polarity that tends to limit the changing current. If current changes very rapidly with time, then inductor causes a large opposition voltage across its terminals. If current changes through the inductor from one level to another level instantaneously i.e. in $dt \simeq 0$ sec., then the voltage across it would become infinite and this would require infinite power at the terminals of the inductor. Thus, instantaneous changes in the current through an inductor are not possible at all in practice.

Remark-2: (i) The current flowing through the inductor cannot change instantaneously (i.e. $i(0^-)$ just right before the change of current = $i(0^+)$ just right after the change of current). However, the voltage across an inductor can change abruptly. (ii) The inductor acts as a short circuit (i.e. inductor terminals are shorted with a conducting wire) when the current flowing through the inductor does not change (constant). (iii) These properties of inductor are important since they will be used to determine "boundary conditions".

L.10.3 Study of dc transients and steady state response of a series R-L circuit.

Ideal Inductor: Fig.10.4 shows an ideal inductor, like an ideal voltage source, has no resistance and it is excited by a dc voltage source V_S.

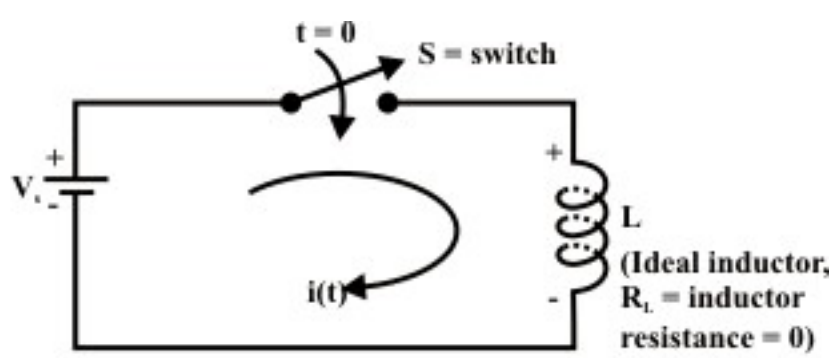

Fig. 10.4: An ideal inductor connected to a constant voltage source

The switch 'S' is closed at time '$t = 0$' and assumed that the initial current flowing through the ideal inductor $i(0)$ just before closing the switch is equal to zero. To find the system response ($i(t) - vs - t$), one can apply KVL around the closed path.

KVL

$$V_S - L\frac{di(t)}{dt} = 0 \quad \Rightarrow \frac{d\,i(t)}{dt} = \frac{V_S}{L} \tag{10.8}$$

$$\int_0^{i(t)} d\,i(t) = \frac{V_s}{L}\int_0^t dt \Rightarrow i(t) = \frac{V_s}{L}t + i(0) \quad \Rightarrow i(t) = \frac{V_s}{L}t \quad (\text{note } i(0) = 0\ ) \tag{10.9}$$

Equation (10.9) implies that the current through inductor increases with increase in time and theoretically it approaches to infinity as $t \to \infty$ but in practice, this is not really the case.

Real or Practical inductor:

Fig.10.5 shows a real or practical inductor has some resistance and it is exactly equal to the resistance of the wire used to wind the coil.

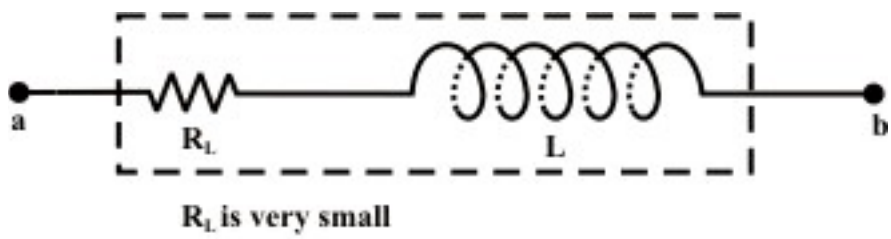

Fig. 10.5: Representation of an practical inductor

Let us consider a practical inductor is connected in series with an external resistance R_1 and this circuit is excited with a dc voltage V_S as shown in fig.10.6(a).

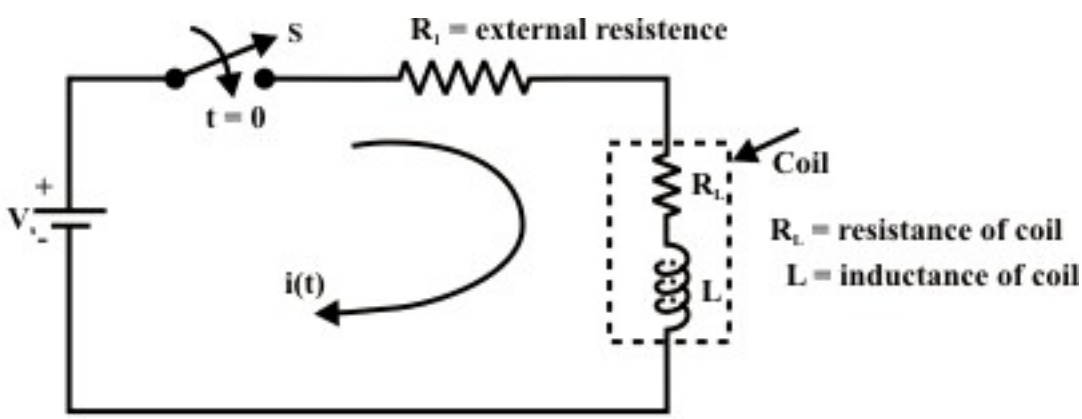

Fig. 10.6(a): a practical inductor connected to a constant voltage source

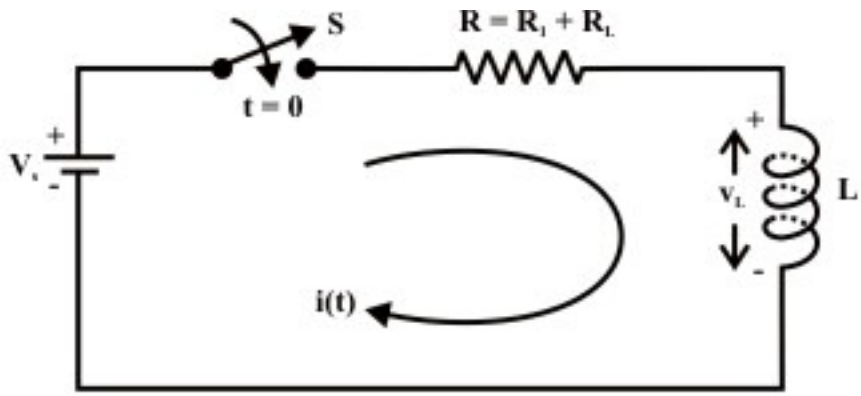

Fig. 10.6(b): Equivalent representation circuit shown in fig. L.10.6(a)

Our problem is to study the growth of current in the circuit through two stages, namely; (i) dc transient response (ii) steady state response of the system.

D.C Transients: The behavior of the current $(i(t))$; charge $(q(t))$ and the voltage $(v(t))$ in the circuit (like $R-L$; $R-C$: $R-L-C$ circuit) from the time ($t(0^+)$) switch is closed until it reaches its final value is called dc transient response of the concerned circuit. The response of a circuit (containing resistances, inductances, capacitors and switches) due to sudden application of voltage or current is called transient response. The most common instance of a transient response in a circuit occurs when a switch is turned on or off – a rather common event in an electric circuit.

L.10.3.1 Growth or Rise of current in R-L circuit

To find the current expression (response) for the circuit shown in fig. 10.6(a), we can write the KVL equation around the circuit

$$V_S - \left(R_1 + R_L\right) i(t) - v_L(t) = 0 \Rightarrow V_S = R\, i(t) + L\frac{d\, i(t)}{dt} \tag{10.10}$$

where V_S is the applied voltage or forcing function , R_L is the resistance of the coil, R_1 is the external resistance. One can combine the resistance of coil R_L to the external resistance R_1 in order to obtain a simplified form of differential equation. The circuit configuration shown in fig. 10.6(a) is redrawn equivalently in fig.10.6(b) for our convenience. The equation (10.10) is the standard first order differential equation and its solution can be obtained by classical method. The solution of first or second order differential equation is briefly discussed in Appendix (at the end of this lesson-10). The following relation gives the solution of equation (10.10)

$$i(t) = i_n(t) + i_f(t) = A_1 e^{\alpha t} + A \tag{10.11}$$

Here, $i_n(t)$ is the complementary solution/natural solution of differential equation (10.10). It is also sometimes called as transient response of system (i.e. the first part of

response is due to an initial condition of the system or force free response). The second part $i_f(t)$ of eq. (10.11) is the particular integral solution/force response or steady state response of the system due to the forcing function ($f(t) = V_S$) or input signal to the series $R-L$ circuit. It may be noted the term A provide us the steady state solution of the first order differential equation while the forcing function (or input to the system) is step function (or constant input). More specifically, for a linear system, the steady state solution of any order differential equation is the same nature of forcing function $(f(t))$ or input signal but different in magnitude. We have listed in tabular form the nature of steady state solution of any order differential equation for various types of forcing functions (see in Appendix). To get the complete solution of eq. (10.10), the values of $\alpha,\ A_1\ and\ A$ are to be computed following the steps given below:

Step-1: How to find the value of α?

Assigning $V_S = 0$ and introducing an operator $\alpha = \frac{d}{dt}$ in eq.(10.10) , we get a characteristic equation that will provide us the numerical value of α. This in turn, gives us the transient response of the system provided the constant A_1 is known to us.

The Characteristic equation of (10.10) is $R + \alpha L = 0 \Rightarrow \alpha = -\frac{R}{L}$.

Step-2: How to obtain the constants $A_1\ and\ A$?

It may be noted that the differential eq. (10.10) must be satisfied by the particular integral solution or steady state solution $i_f(t)$. The value of $i_f(t)$ at steady state condition (i.e. $t \to \infty$) can be found out using the eq.(10.11) and it is given below.

Using final condition $(t \to \infty)$

$$V_S = R\, i_f(t) + L\frac{d\, i_f(t)}{dt} \tag{10.12}$$

(note: at steady state $(t \to \infty)$ $i_f(t) = A = cons\tan t$ from eq. (10.11))

$$V_S = R\ A + L\frac{d\ A}{dt} \Rightarrow A = \frac{V_s}{R} \tag{10.13}$$

Using initial condition (t = 0)

Case-A: Assume current flowing through the inductor just before closing the switch 'S" (at $t = 0^-$) is $i(0^-) = 0$.

$$i(0) = i(0^-) = i(0^+) = A_1 + A \tag{10.14}$$

$$0 = A_1 + A \Rightarrow A_1 = -A = -\frac{V_s}{R}$$

Using the values of α , $A_1\ and\ A$ in equation (10.11), we get the current expression as

$$i(t) = \frac{V_S}{R}\left[1 - e^{-\frac{R}{L}t}\right] \tag{10.15}$$

The table shows how the current i(t) builds up in a R-L circuit.

Actual time (t) in sec	**Growth of current in inductor (Eq.10.15)**
$t = 0$	$i(0) = 0$
$t = \tau\left(= \frac{L}{R}\right)$	$i(\tau) = 0.632 \times \frac{V_s}{R}$
$t = 2\tau$	$i(2\tau) = 0.865 \times \frac{V_s}{R}$
$t = 3\tau$	$i(3\tau) = 0.950 \times \frac{V_s}{R}$
$t = 4\tau$	$i(4\tau) = 0.982 \times \frac{V_s}{R}$
$t = 5\tau$	$i(5\tau) = 0.993 \times \frac{V_s}{R}$

Note: Theoretically at time $t \to \infty$ the current in inductor reaches its steady state value but in practice the inductor current reaches 99.3% of its steady state value at time $t = 5\tau$ (sec.).

The expression for voltage across the external resistance R_1 (see Fig. 10.6(a))

$$= v_{R1} = i(t)\,R_1 = \frac{V_s}{R}\left[1 - e^{-\frac{R}{L}t}\right]R_1 \tag{10.16}$$

The expression for voltage across the inductor or coil

$$v_{coil}(t) = v_{inductor}(t) = V_S - v_{R_1}(t) = V_S - \frac{V_s}{R}\left(R_1\right)\left[1 - e^{-\frac{R}{L}t}\right] \tag{10.17}$$

Graphical representation of equations (10.15)-(10.17) are shown in Fig.10.7 for different choices of circuit parameters (i.e., L & R)

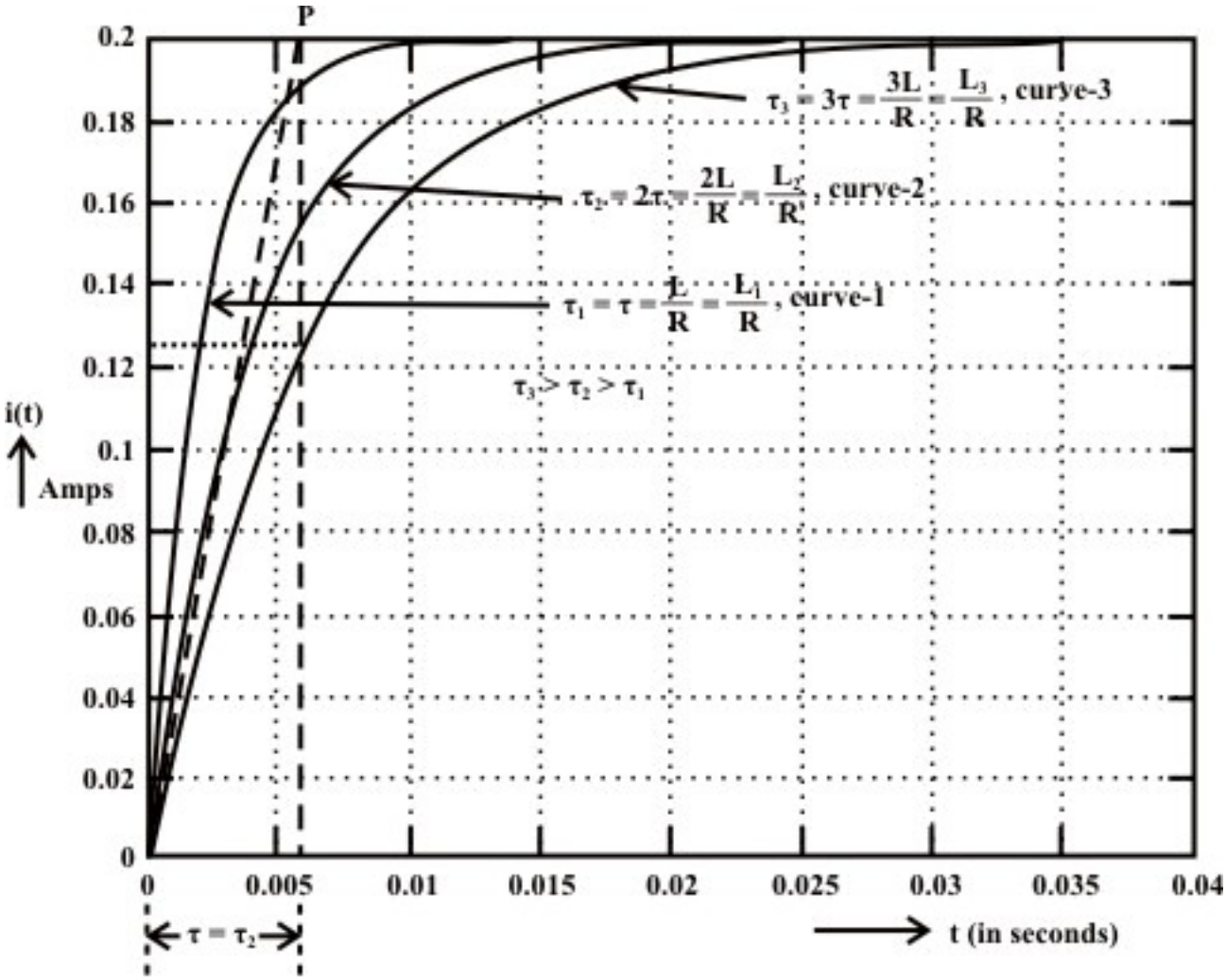

Fig. 10.7(a): Growth of current in R-L circuit (assumed initial current through inductor is zero).

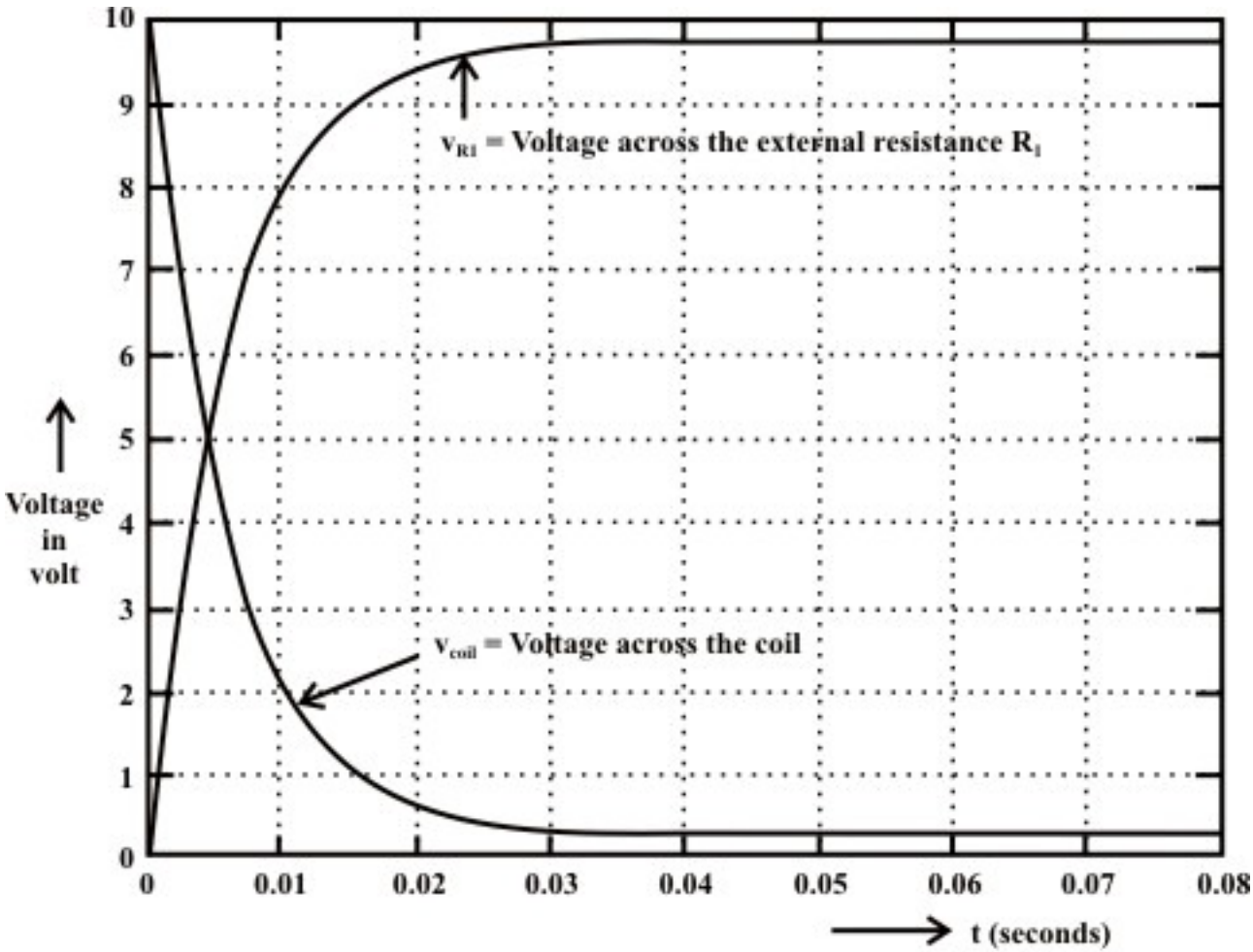

Fig. 10.7(b): Voltage response in different elements of R-L circuit (assumed i_o = o)

Case-B: Assume current flowing through the inductor just before closing the switch 'S" (at $t = 0^-$) is $i(0^-) = i_0 \neq 0$.

Using equations (10.13) and (10.14), we get the values of $A = \frac{V_S}{R}$ *and* $A_1 = i(0) - A = i_0 - \frac{V_S}{R}$. Using these values in equation (10.11), the expression for current flowing through the circuit is given by

$$i(t) = \frac{V_S}{R}\left[1 - e^{-\frac{R}{L}t}\right] + \left(i_0\, e^{-\frac{R}{L}t}\right) \qquad (10.18)$$

The second part of the right hand side of the expression (10.18) indicates the current flowing to the circuit due to initial current i_0 of inductor and the first part due to the forcing function V_S applied to the circuit. This means that the complete response of the circuit is the algebraic sum of two outputs due to two inputs; namely (i) due to forcing function V_S (ii) due to initial current i_0 through the inductor. This implies that the superposition theorem is also valid for such type of linear circuit. Fig.10.8 shows the

response of inductor current when the circuit is excited with a constant voltage source V_S and the initial current through inductor is i_0.

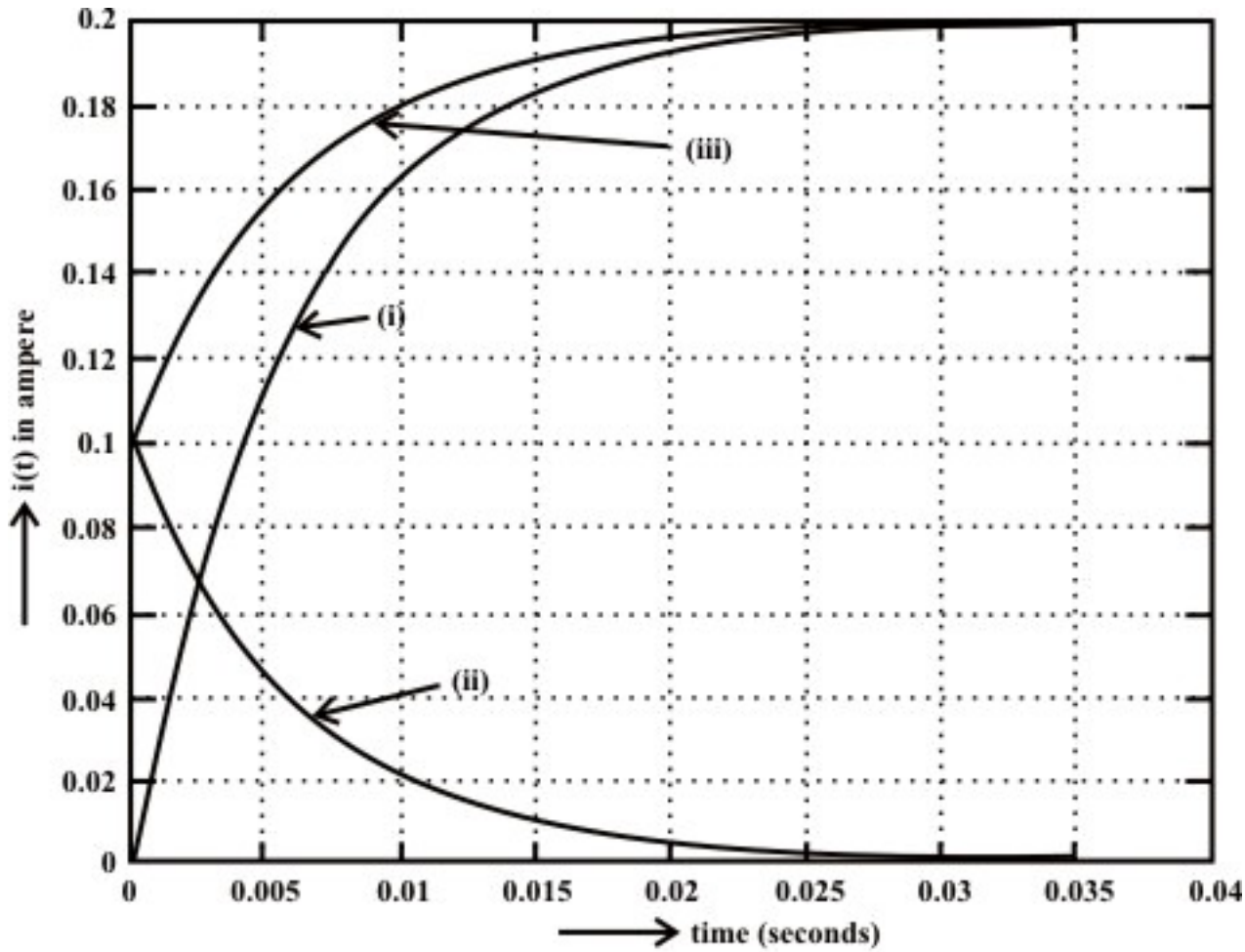

Fig. 10.8: Current through inductor due to (i) forcing function V_s only, (ii) initial condition i_o only, (iii) combined effect of (i) and (ii)

Remark-3: One can also solve this differential equation by separating the variables and integrating.

Time constant (τ) for exponential growth response (τ): We have seen that the current through inductor is represented by

$$i(t) = \frac{V_S}{R}\left[1 - e^{-\frac{R}{L}t}\right]$$

when a series $R-L$ circuit is excited by a constant voltage source (V_S) and an initial current through the inductor i_0 is assumed to be zero. Further it may be noted that the current through the inductor (see fig.10.7) increases as time increases. The shape of

growing current before it reaches to a steady state value $\left(\frac{V_S}{R}\right)$ entirely depends on the parameters of $R-L$ circuit (i.e. R & L) that associated with the exponential term $\left(e^{-\frac{R}{L}t}\right)$. As '$t$' grows larger and larger the transient, because of its negative exponential factor, diminishes and disappears, leaving only the steady state.

Definition of Time Constant (τ) of $R-L$ Circuit: It is the time required for any variable or signal (in our case either current ($i(t)$) or voltage $(v_{R1}\ or\ v_L)$) to reach 63.2% (i.e the time at which the factor $\left(1-e^{-\frac{R}{L}t}\right)\times 100$ in eq.(10.15) becomes $\left(1-e^{-1}\right)\times 100 = 63.2\%$) of its final value. It is possible to write an exact mathematical expression to calculate the time constant (τ) of any first-order differential equation.

Let 't' is the time required to reach 63.2% of steady-state value of inductor current (see fig. 10.6(a)) and the corresponding time 't' expression can be obtained as

$$i(t) = 0.632*\frac{V_S}{R} = \frac{V_S}{R}\left[1-e^{-\frac{R}{L}t}\right] \Rightarrow 0.632 = 1-e^{-\frac{R}{L}t} \Rightarrow 0.368 = e^{-\frac{R}{L}t} = e^{-1} \Rightarrow t = \frac{L}{R} = \tau\,(\text{sec.})$$

The behavior of all circuit responses (for first-order differential equation) is fixed by a single time constant τ (for $R-L$ circuit $\tau = \frac{L}{R}$) and it provides information about the speed of response or in other words, it indicates how first or slow the system response reaches its steady state from the instant of switching the circuit. Observe the equation (10.15) that the smaller the time constant (τ), the more rapidly the current increases and subsequently it reaches the steady state (or final value) quickly. On the other hand, a circuit with a larger time constant (τ) provides a slow response because it takes longer time to reach steady state. These facts are illustrated in fig.10.7(a). In accordance with convenience, the time constant of an exponential term $\left(say\ \ p(t) = p_0\left(1-e^{-at}\right)\right)$ is the reciprocal of the coefficient 'a' associated with the 't' in the power of exponential term.

Remark-4: An interesting property of exponential term is shown in fig. 10.7(a). The time constant τ of a first order differential equation may be found graphically from the response curve. It is necessary to draw a tangent to the exponential curve at time '$t=0$' and maintained the same slope until it intersects the steady state value of current curve at P point. A perpendicular is drawn from the point P to the time axis and it intersects the time axis at $t=\tau$ (see fig. 10.7(a)). Mathematically, this can be easily verified by considering the equation of a straight line tangent to the current curve at $t=0$, given by $y=mt$ where m is the slope of the straight line, expressed as

$$m = \frac{d\,i(t)}{dt}\Big|_{t=0} = \frac{d\left(\frac{V_S}{R}\left[1 - e^{-\frac{R}{L}t}\right]\right)}{dt}\Big|_{t=0} = \frac{V_S}{L} \tag{10.19}$$

Here, we designated the value of time 't' required to reach y from '0' to $\frac{V_S}{R}$ *units*, assuming a constant rate (slope) of growth. Thus,

$$\frac{V_S}{R} = \frac{V_S}{L}t \;\Rightarrow\; t = \frac{L}{R} = \tau\,(\text{sec.}) \tag{10.20}$$

It is often convenient way of approximating the time constant (τ) of a circuit from the response curve (see fig.10.7(a) for curve-2).

L.10.3.2 Fall or Decay of current in a R-L circuit

Let us consider the circuit shown in fig. 10.9(a). In this circuit, the switch 'S' is closed sufficiently long duration in position '1'. This means that the current through the inductor reaching its steady-state value ($I = \frac{V_S}{R} = \frac{V_S}{R_1 + R_L} = I_0$) and it acts, as a short circuit i.e. the voltage across the inductor is nearly equal to zero since resistance $R_L \ll R_1$. If the switch 'S' is opened at time 't'=0 and kept in position '2' for $t > 0$ as shown in fig. 10.9(b), this situation is referred to as a source free circuit.

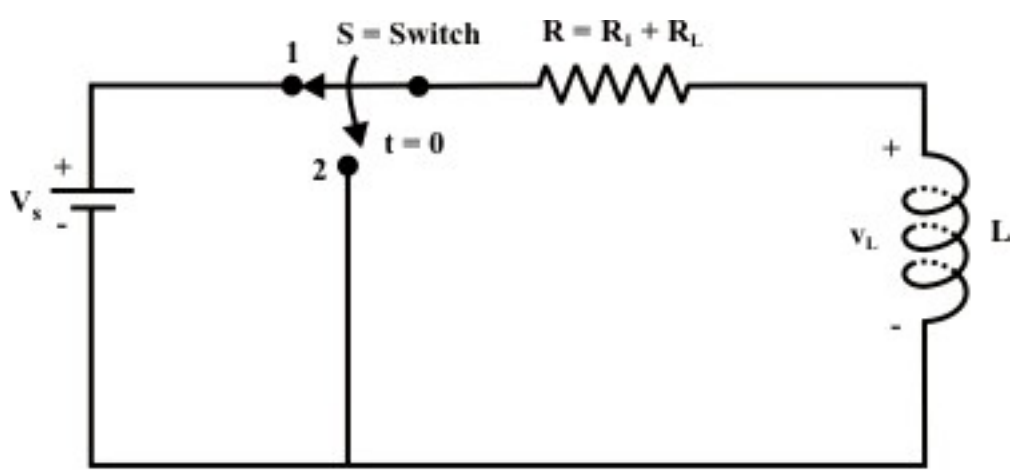

Fig. 10.9(a)

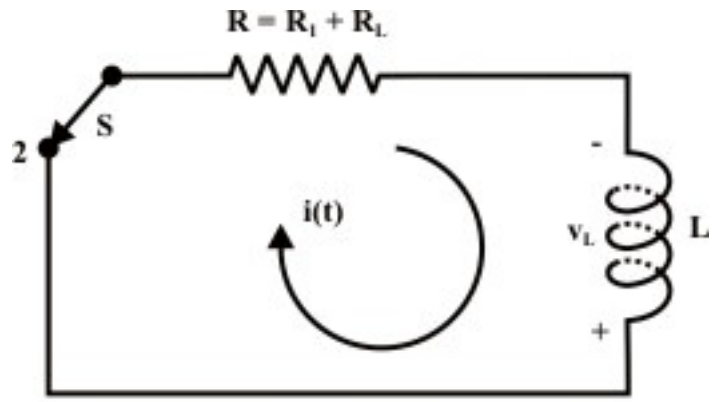

Fig. 10.9(b): Decay of current in R - L circuit

Since the current through an inductor cannot change instantaneously, the current through the inductor just before ($i\,(0^-)$ and after ($i(0^+)$ opening the switch 'S' must be same. Because there is no source to sustain the current flow in inductor, the magnetic field in inductor starts to collapse and this, in turn, will induce a voltage across the inductor. The polarity of this induced voltage across the inductor is just in reverse direction compared to the situation that occurred during the growth of current in inductor (i.e. when the switch 'S' is kept in position '1'). This is illustrated in fig. 10.9(b), where the voltage induced in inductor is positive at the bottom of the inductor terminal and negative at the top. This implies that the current through inductor will still flow in the same direction, but with a magnitude decaying toward zero. Appling KVL around the closed circuit in fig. 10.9(b), we obtain

$$L\frac{d\,i(t)}{dt}+R\,i(t)=0 \tag{10.21}$$

The solution of the homogeneous (input free), first-order differential equation with constant coefficients subject to the initial (boundary) inductor current (initial condition, $i(0^-)=i(0^+)=\frac{V_S}{R}=I$) is given by

$$i(t)=i_n(t)=A_1\,e^{\alpha t} \tag{10.22}$$

where α can be found from the characteristic equation of eq.(10.21) described by

$$L\alpha+R=0 \;\Rightarrow\; \alpha=-\frac{R}{L} \tag{10.23}$$

At time $t=0$, the initial condition $i(0^-)=i(0^+)=\frac{V_S}{R}$ is used in equation (10.22) to compute the constant A_1 and it is given below.

$$i(0)=A_1 \quad \Rightarrow A_1=\frac{V_S}{R}=I$$

Using the values of A_1 *and* α in equation (10.22), we get final expression as

$$i(t) = \frac{V_S}{R}\, e^{-\frac{R}{L}t} \qquad for \quad t \geq 0 \tag{10.24}$$

A sketch of $i(t)$ for $t \geq 0$ is shown in fig.10.10. Here, transient has ended and steady state has been reached when both current in inductor $i(t)$ and voltage across the inductor including its internal resistance are zero.

Time Constant (τ) for exponential decay response: For the source free circuit, it is the time τ by which the current falls to 36.8 percent of its initial value. The initial condition in this case (see fig. 10.9(a) is considered to be the value of inductor's current at the moment the switch S is opened and kept in position '2'. Mathematically, τ is computed as

$$i(t) = 0.368 \times \frac{V_S}{R} = \frac{V_S}{R}\, e^{-\frac{R}{L}t} \quad \Rightarrow \quad t = \tau = \frac{L}{R} \tag{10.25}$$

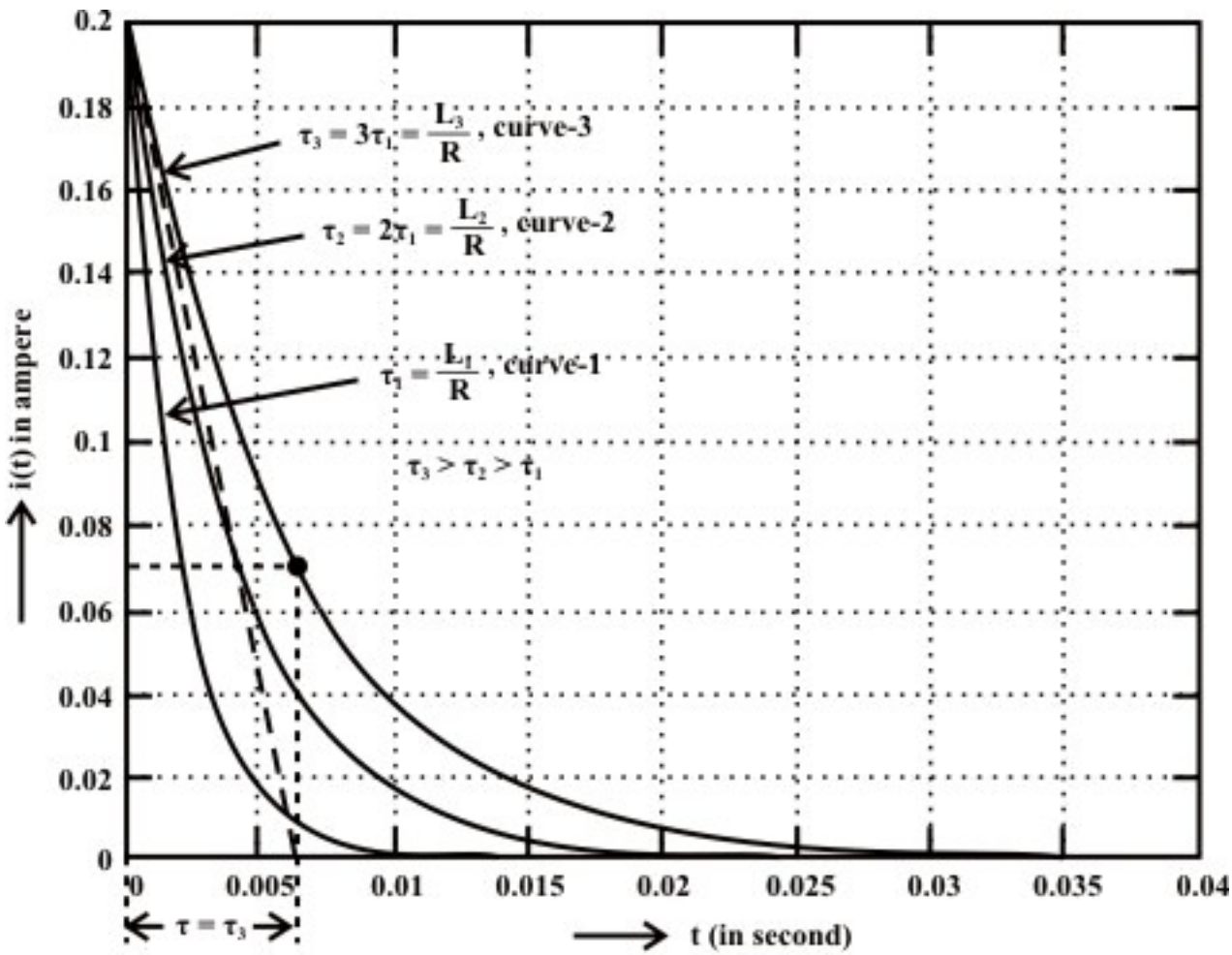

Fig. 10.10: Fall of current in R-L circuit (assumed initial current through inductor is I).

Alternatively, the time constant for an exponential decay response of a circuit may be computed graphically by adopting the steps (see equations (10.19) and (10.20)) as discussed before. In fig.10.10, a tangent is drawn to the exponential decay curve at time '$t=0$' and maintained the same slope until the straight line intercepts time axis at time $t=\tau$. Approximately, the value of τ can thus be found directly from graphical representation of exponential decay curve.

L.10.3.3 Energy stored in an inductor

Let us turn our attention to power and energy consideration for an inductor. The instantaneous power absorbed by the inductor is expressed by product of the current through inductor $i(t)$ and the voltage across it $v(t)$.

$$p(t)=v(t)\,i(t)=i(t)\,L\frac{d\,i(t)}{dt} \tag{10.26}$$

Since the energy is the product of power and time, the energy absorbed by an inductor over a period is expressed as

$$W_L = \int_{t_0}^{t} p(t)\,dt = \int_{t_0}^{t} i(t)\,L\,\frac{d\,i(t)}{dt}\,dt = \frac{1}{2}\,L\left[i^2(t) - i^2(t_0)\right] \tag{10.27}$$

where we select the current through inductor at time '$t_0 = -\infty$' is $i(-\infty) = 0$. Then, we have $W_L = \frac{1}{2} L\,i^2(t)$ and from this relation we see that the energy stored in an inductor is always non-negative. At any consequent time at which the current is zero, no energy is stored in the inductor. The ideal inductor ($R_L = 0\Omega$) never dissipates energy, but only stores. In true sense, a physical or practical inductor dissipates a very small amount of stored energy due to its small series resistance.

Example-L.10.2 Fig.10.11 shows the plot of current $i(t)$ through a series $R-L$ circuit when a constant forcing function of magnitude $V_S = 50\ V$ is applied to it. Calculate the values of resistance R and inductance L.

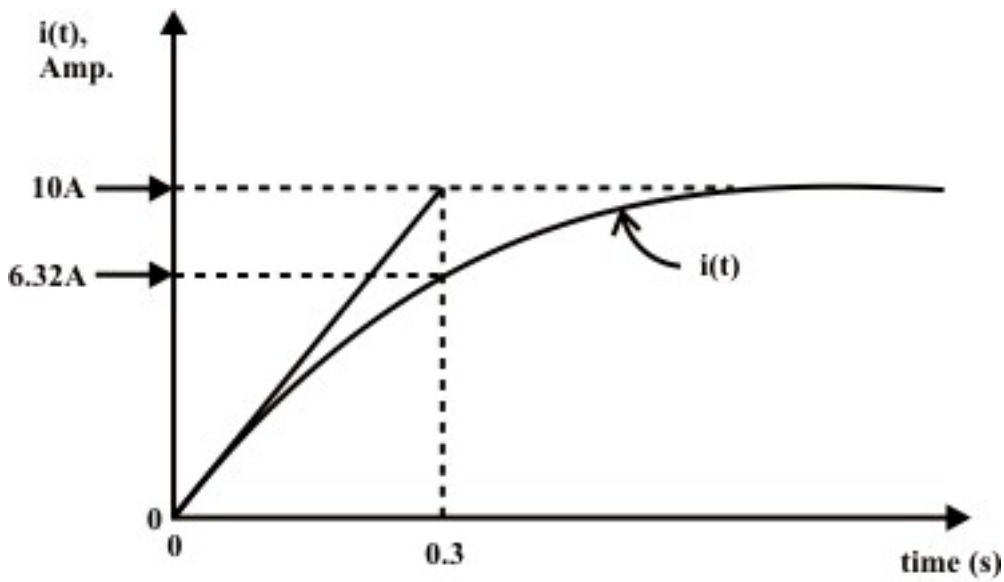

Fig. 10.11: Current -y_s-time characteristic

Solution: From fig.10.11 one can easily see that the steady state current flowing through the circuit is $10\,A$ and the time constant of the circuit $\tau = 0.3$ sec. The following relationships can be written as

$$i_{steady\,state} = \frac{V_S}{R} \Rightarrow 10 = \frac{50}{R} \Rightarrow R = 5\ \Omega$$

and $\tau = \frac{L}{R} \Rightarrow 0.3 = \frac{L}{5} \Rightarrow L = 1.5\ H$

Example-L.10.3 For the circuit shown in Fig.10.12, the switch 'S' has been closed for a long time and then opens at $t = 0$.

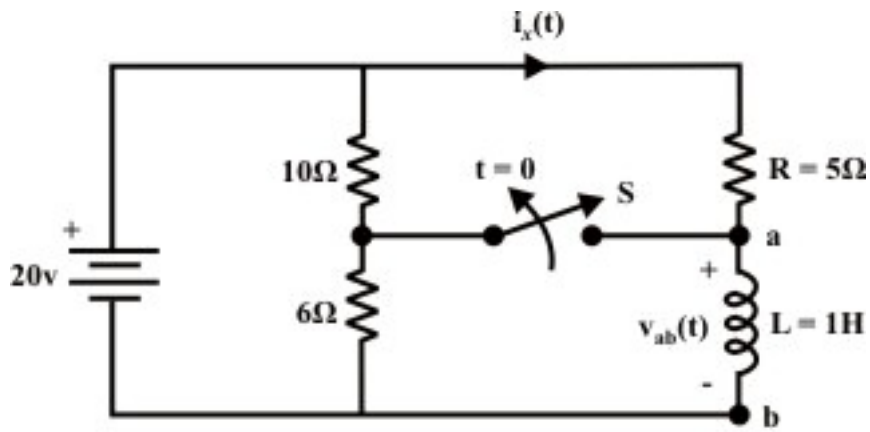

Fig. 10.12

Find,

(i) $v_{ab}(0^-)$ (ii) $i_x(0^-)$, $i_L(0^-)$ (iii) $i_x(0^+)$ (iv) $v_{ab}(0^+)$ (v) $i_x(t=\infty)$ (vi) $v_{ab}(t=\infty)$ (vii) $i_x(t)$ *for* $t>0$

Solution: When the switch S was in closed position for a long time, the circuit reached in steady state condition i.e. the current through inductor is constant and hence, the voltage across the inductor terminals *a and b* is zero or in other words, inductor acts as short circuit i.e., (i) $v_{ab}(0^-)=0\,V$. It can be seen that the no current is flowing through 6Ω resistor. The following are the currents through different branches just before the switch 'S' is opened i.e., at $t=0^-$.

$i_x(0^-)=\frac{20}{5}=4A$ and the current through 10Ω resistor, $i_{10\Omega}(0^-)=\frac{20}{10}=2A$. The algebraic sum of these two currents is flowing through the inductor i.e., (ii) $i_L(0^-)=2+4=6A$.

When the switch 'S' is in open position

The current through inductor at time $t=0^+$ is same as that of current $i_L(0^-)$, since inductor cannot change its current instantaneously .Therefore, the current through $i_x(0^+)$ is given by

$i_x(0^+)=i_L(0^+)=6A$.

Applying KVL around the closed loop at $t=0^+$ we get,

$20-i_x(0^+)\times R=v_{ab}(0^+)\Rightarrow 20-6\times 5=v_{ab}(0^+)\Rightarrow v_{ab}(0^+)=-10V$

The negative sign indicates that inductor terminal 'b' as +ve terminal and it acts as a source of energy or mathematically, $v_{ba}(0^+)=10V$.

At steady state condition ($t\to\infty$) the current through inductor is constant and hence inductor acts as a short circuit. This establishes the following relations:

$$v_{ba}(t=\infty)=0V \quad \text{and} \quad i_x(t=\infty)=\frac{20}{5}=4A \tag{10.28}$$

The circuit expression $i_x(t)$ for $t \geq 0$ can be obtained using the KVL around the closed path (see fig.10.12).

KVL equation:

$$V_S - i_x(t) \times 5 - L\frac{di_x(t)}{dt} = 0$$

$$i_x(t) \times 5 + L\frac{di_x(t)}{dt} = V_S \qquad (10.29)$$

The solution of first order differential equation due to forcing function and initial condition is given by

$$i_x(t) = A_1 e^{-\frac{R}{L}t} + A \qquad (10.30)$$

Initial and final conditions are: (i) At $t = 0$, $i_x(0) = i_L(0^-) = i_L(0^+) = 6\,A$ (ii) $t \to \infty$, current through inductor $i_L(t = \infty) = 4\,A$ (see Eq. 10.28). Using initial and final conditions equation (10.30) we get, $A_1 = 6 - A$ *and* $A = 4 \;\Rightarrow A_1 = 2$

From equation (10.30), we get the final expression as $i_x(t) = 4 + 2e^{-\frac{5}{1}t}$ for $t \geq 0$.

Example: L.10.4 The switch 'S' is closed in position '1' sufficiently long time and then it is kept in position '2' as shown in fig.10.13. Compute the value of v_L *and* i_L (i) the instant just prior to the switch changing; (ii) the instant just after the switch changes. Find also the rate of change of current through the inductor at time $t = 0^+$ $\left(i.e., \left.\frac{di_l(t)}{dt}\right|_{t=0^+} \right)$.

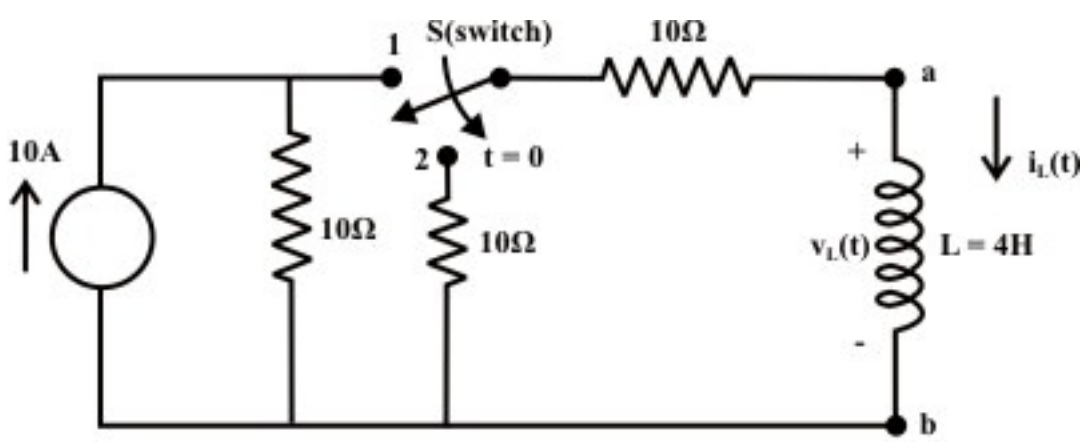

Fig. 10.13

Solution: We assume that the circuit has reached at steady state condition when the switch was in position '1'. Note, at steady state the inductor acts as short circuit and voltage across the inductor is zero.

At $t=0^-$, the current through and the voltage across the inductor are $i_L(0^-)=\frac{10}{10+10}\times 10=5A$ and $v_L(0^-)=0V$ respectively. When the switch is kept in position '2', current through the inductor cannot change instantaneously but this is not true for the voltage across the inductor. At $t=0^+$, one can write the following expressions:

$i_L(0^+)=5A$ and $v_L(0^+)=-(10+10)\times 5=-100V$ ('b' is more + ve potential than 'a' terminal). Note that the stored energy in inductor is dissipated in the resistors. Now, the rate of change of current through inductor at time $t=0^+$ is obtained as

$$L\left.\frac{di_l(t)}{dt}\right|_{t=0^+}=-100V \Rightarrow \left.\frac{di_l(t)}{dt}\right|_{t=0^+}=\frac{-100}{4}=-25\,amp./\sec.$$

Example: L.10.5 Fig. 10.14(a) shows that a switch 'S' has been in position '1' for a long time and is moved in position '2' at time '$t=0$'. Find the expression $v(t)$ for $t\geq 0$.

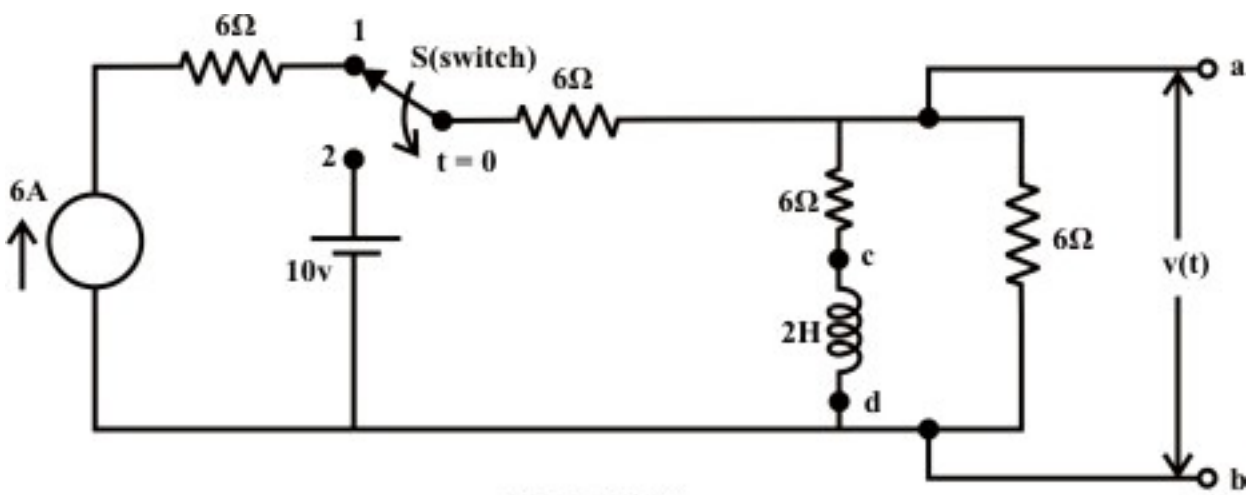

Fig. 10.14(a)

Solution: When the switch 'S' is in position '1', the current through inductor (using the fundamental property of inductor currents) at steady state condition (see fig.10.14(b)) is

$$I_L=\frac{6}{6+6}\times 6=3A \Rightarrow I_L(0^-)=I_L(0^+)=3A \qquad (10.31)$$

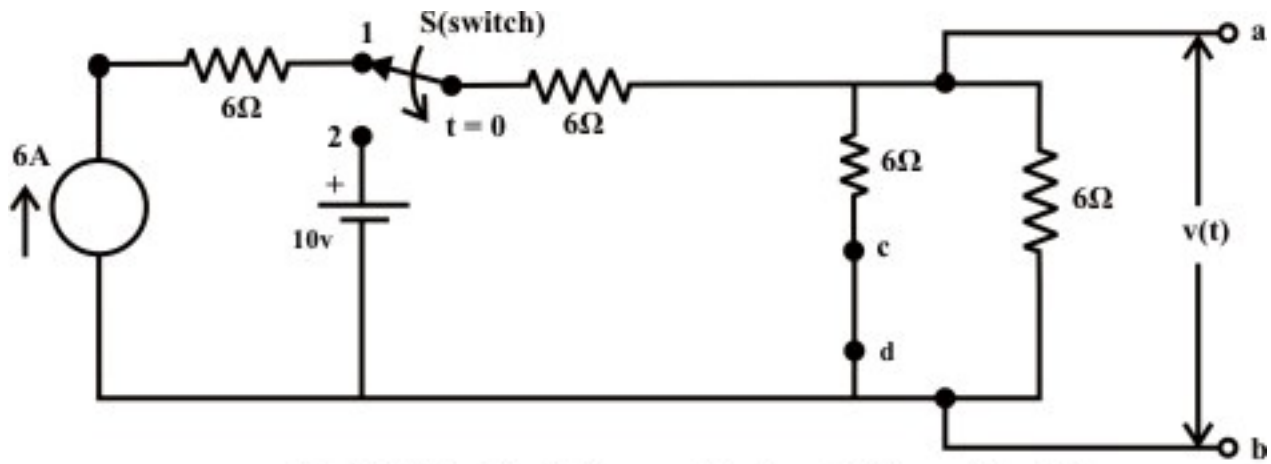

Fig. 10.14(b): Circuit diagram for the switch in position '1'

The circuit for the switch 'S is in position '2' is shown in fig.10.14 (c). The current in inductor can be computed using following two different methods.

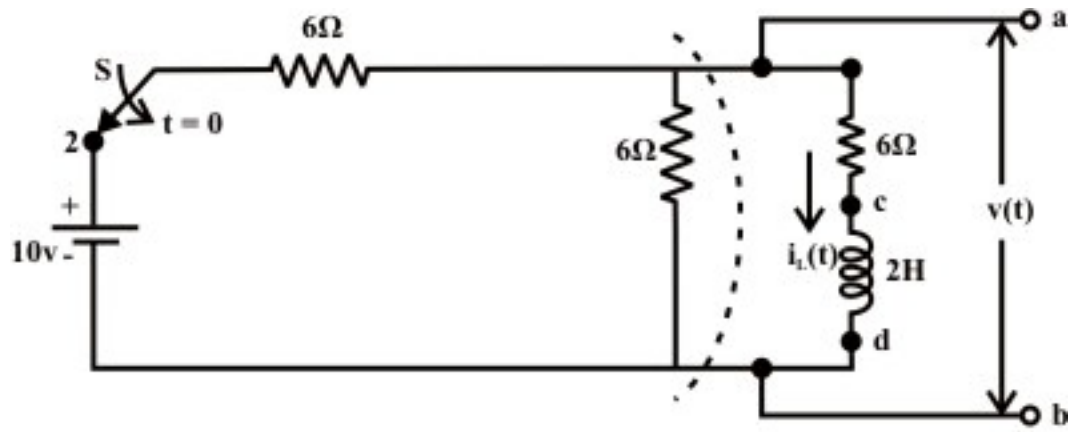

Fig. 10.14(c)

Method-1: Using Thevenin's theorem

Convert the part of a circuit **containing independent sources and resistances into** an equivalent Thevenin's voltage source as shown in fig.10.14.(d).

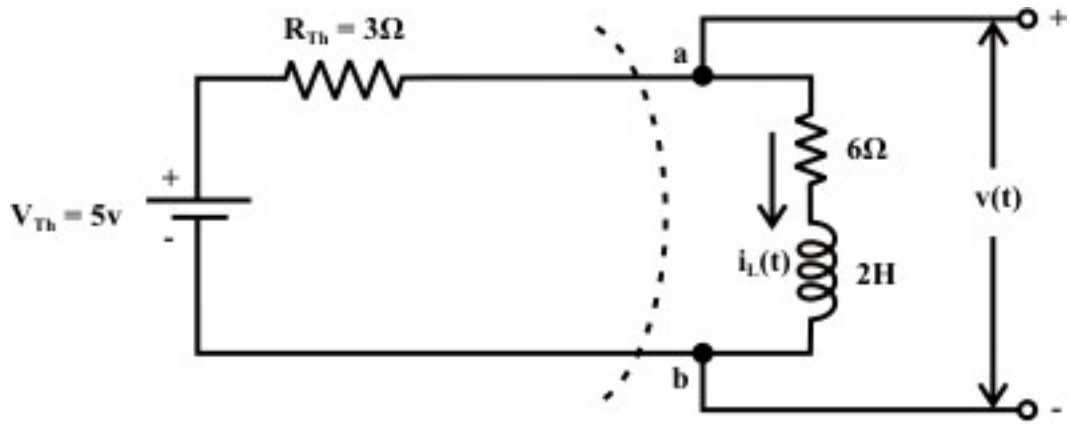

Fig. 10.14(d)

Using the KVL around the closed path is

$$9i_L(t)+2\times\frac{di_L(t)}{dt}=5 \tag{10.32}$$

The solution of the above equation is given by

$$i_L(t)=A_1e^{-\frac{9}{2}t}+A=i_n(t)+i_f(t) \tag{10.33}$$

where, $i_n(t)$ = complementary/natural/transient solution of eq.(10.32)

$i_f(t)$ = particular/ steady state/final solution of eq.(10.32)

The constants A_1 *and* A are computed using the initial and final conditions of the circuit when the switch is kept in position '2'.

At time $t=0$,

$$i_L(0)=i_L(0^+)=3=A_1+A \tag{10.34}$$

At time $t\to\infty$, the current in inductor reached its steady state condition and acts as a short circuit in a dc source network. The current through inductor is

$$i_L(t=\infty)=\frac{5}{3+6}=0.555\ amp.=i_f=A \tag{10.35}$$

Using the above two equations in (10.33), one can obtain the final voltage expression for voltage $v(t)$ across the terminals 'a' and 'b' as

$$v_{ab}(t)=v(t)=5-i_L(t)\times3=5-\left(2.445\times e^{-\frac{9}{2}t}+0.555\right)\times3=\left(3.339-7.335\times e^{-\frac{9}{2}t}\right)V$$

Method-2: Mesh current method

Assign the loop currents in clockwise directions and redrawn the circuit as shown in Fig. 10.14(e). The voltage across the terminals 'a' and 'b' can be obtained by solving the following loop equations.

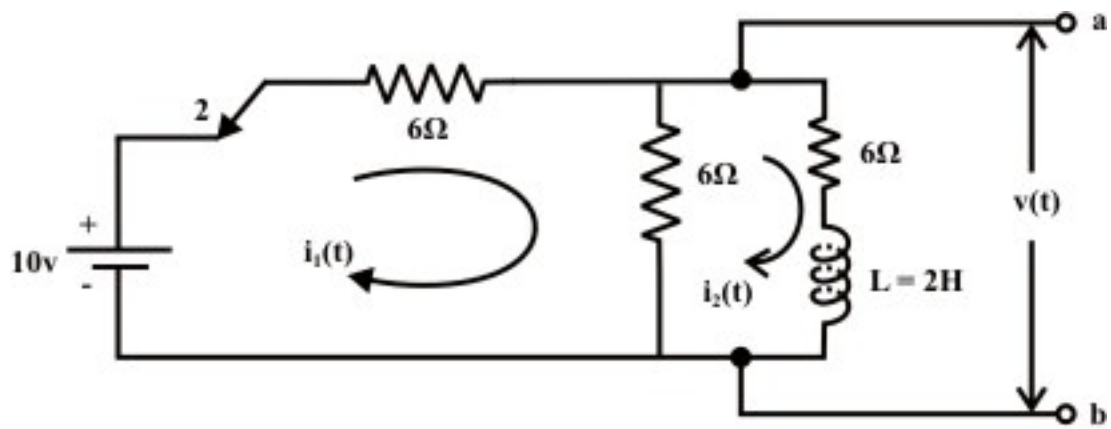

Fig. 10.14(e)

Loop-1:

$$10-6i_1(t)-6\left(i_1(t)-i_2(t)\right)=0 \Rightarrow 10=12i_1(t)-6i_2(t) \Rightarrow i_1(t)=\frac{1}{12}\left(10+6i_2(t)\right) \quad (10.36)$$

Loop-2:

$$-6i_2(t)-L\frac{di_2(t)}{dt}-6\left(i_2(t)-i_1(t)\right)=0 \Rightarrow -6i_1(t)+12i_2(t)+2\frac{di_2(t)}{dt}=0 \quad (10.37)$$

Using the value of $i_1(t)$ in equation (10.37) , we get

$$9i_2(t)+2\times\frac{di_2(t)}{dt}=5 \quad (10.38)$$

To solve the above first order differential equation we must know inductor's initial and final conditions and their values are already known (see, $\Rightarrow i_2(0^-)=i_2(0^+)=3A$ and $i_2(t=\infty)=\frac{5}{3+6}=0.555\ amp.$). The solution of differential equation (10.38) provides an expression of current $i_2(t)$ and this, in turn, will give us the expression of $i_1(t)$. The voltage across the terminals 'a' and 'b' is given by

$$v_{ab}=10-6\times i_1(t)=6i_2(t)+2\frac{di_2(t)}{dt}=\left(3.339-7.335\times e^{-\frac{9}{2}t}\right)V$$

where, $i_2(t)$, $i_1(t)$ can be obtained by solving equations (10.38) and (10.36). The expressions for $i_2(t)$ and hence $i_1(t)$ arte given below:

$$i_2(t)=\left(2.445\times e^{-\frac{9}{2}t}+0.555\right) \text{ and } i_1(t)=\frac{1}{12}\left(10+6i_2(t)\right)=\left(1.11+1.2225e^{-\frac{9}{2}t}\right)$$

L.10.4 Capacitor and its behavior

Fig.10.15 shows a capacitor consists of two pieces of metal (the plates) separated from each other by a good insulator (the dielectric), with two wires (the leads) attached to the metal plates.

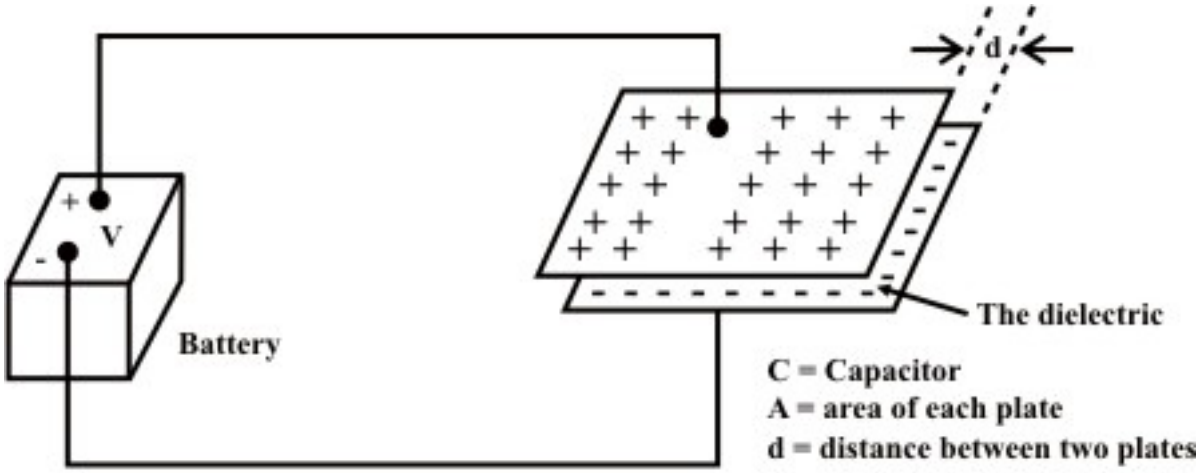

Fig. 10.15: Charging of a Capacitor

A battery is connected across the capacitor to transport charge from one plate to the other until the capacitor charge voltage buildup is equal to the battery voltage V. The voltage across the capacitor depends on how much charge was deposited on the plates and also how much capacitance the capacitor has. In other words, there is a relationship between the voltage (V), charge (Q) and capacitance (C), they are related with a mathematical expression as

$$C = \frac{Q\ (coulumb)}{V\ (volt)} \tag{10.39}$$

where Q = magnitude of charge stored on each plate, V = voltage applied to the plates and the unit of capacitance is in *Farad*. Although the capacitance C of a capacitor is the ratio of charge per plate to the applied voltage but it mainly depends on the physical dimension of the capacitor. If the area of the plates is larger, the more would be the amount of charge stored over the surface of the plates, resulting higher value of capacitance. On the other hand, if the spacing 'd' between the plates is closer, accumulates more charge over the parallel plates and thus increases the value of the capacitance. The quality of dielectric material has an effect on capacitance between the plates. The good quality of dielectric material indicates that higher the permittivity, resulting greater the capacitance. The value of capacitance can be expressed in terms physical parameters of capacitor as

$C = \frac{\varepsilon A}{d} = \frac{\varepsilon_0 \varepsilon_r A}{d}$ where A is the area of each plate, d is the distance between the plates, ε_0 (= 8.85×10^{-12}) is the permittivity of free-space, ε_r = relative permittivity of dielectric material and C is the capacitance in Farad. It is important to note that when the applied

voltage across the capacitor exceeds a certain value the dielectric material breaks down and loses it insulation property.

L.10.4.1 Continuity condition of capacitors

To find the current-voltage relationship of the capacitor, one can take the derivative of both sides of Eq.(10.39)

$$C\frac{d\,v_c(t)}{dt}=\frac{d\,q(t)}{dt}=i(t)\ \Rightarrow i(t)=C\frac{d\,v_c(t)}{dt} \qquad (10.40)$$

The voltage-current relation can also be represented by another form as

$v_c(t)=\frac{1}{C}\int_{t_0}^{t} i(t)\,dt+v_c(t_0)$ where $v_c(t_0)$ is voltage across the capacitor at time 't_0'. It can be seen that when the voltage across a capacitor is not changing with time, or, in other words, the capacitor is fully charged and the current through the capacitor is zero (see Eq.10.40**).** This means that the capacitor resembles as an open circuit and blocks the flow of current through the capacitor. Equation (10.40) shows that an instantaneous ($\Delta t=0$) change in capacitance voltage must be accompanied by an infinite current that requiring an infinite power source. In practice, this situation will not occur in any circuits containing energy storing elements. Thus, the voltage across the capacitor (or electric charge $q(t)$) cannot change instantaneously ($i.e.$, $\Delta t=0$), that is we cannot have any discontinuity in voltage across the capacitor.

Remark-5

(i) The voltage across and charge on a capacitor cannot change instantaneously (i.e. $v_c(0^-)$ just right before the change of voltage = $v_c(0^+)$ just right after the change of voltage). However, current through a capacitor can change abruptly. (ii) The capacitor acts as an open circuit (i.e., when the capacitor is fully charged) when voltage across the capacitor does not change (constant). (iii) These properties of capacitor are important since they will be used to determine "boundary conditions".

L.10.4.2 Study of dc transients and steady state response of a series R-C circuit.

Ideal and real capacitors: An ideal capacitor has an infinite dielectric resistance and plates (made of metals) that have zero resistance. However, an ideal capacitor does not exist as all dielectrics have some leakage current and all capacitor plates have some resistance. A capacitor's leakage resistance is a measure of how much charge (current) it will allow to leak through the dielectric medium. Ideally, a charged capacitor is not supposed to allow leaking any current through the dielectric medium and also assumed not to dissipate any power loss in capacitor plates resistance. Under this situation, the model as shown in fig. 10.16(a) represents the ideal capacitor. However, all real or practical capacitor leaks current to some extend due to leakage resistance of dielectric medium. This leakage resistance can be visualized as a resistance connected in parallel

with the capacitor and power loss in capacitor plates can be realized with a resistance connected in series with capacitor. The model of a real capacitor is shown in fig. 10.16(b).

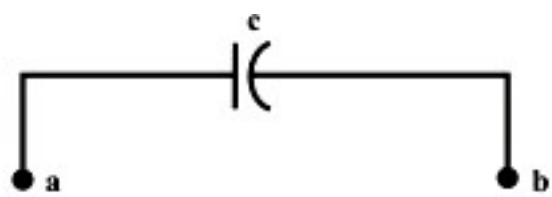

Fig. 10.16(a): Symbolic representation of an ideal capacitor

In present discussion, an ideal capacitor is considered to study the behavior of dc transients in $R-C$ circuit.

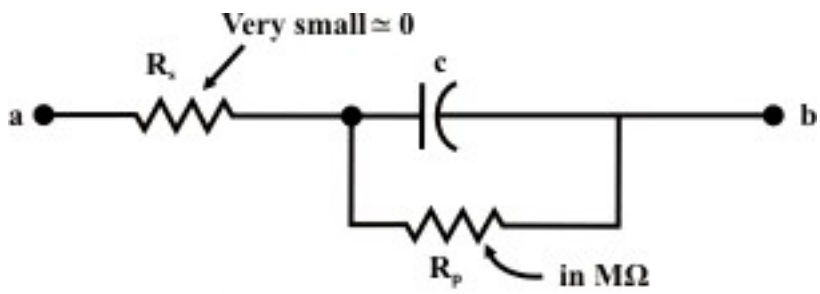

Fig. 10.16(b): Symbolic representation of a real capacitor

L.10.4.3 Charging of a capacitor or Growth of a capacitor voltage in dc circuits

Let us consider a simple series $R-C$ circuit shown in fig. 10.17(a) is connected through a switch 'S' to a constant voltage source V_S.

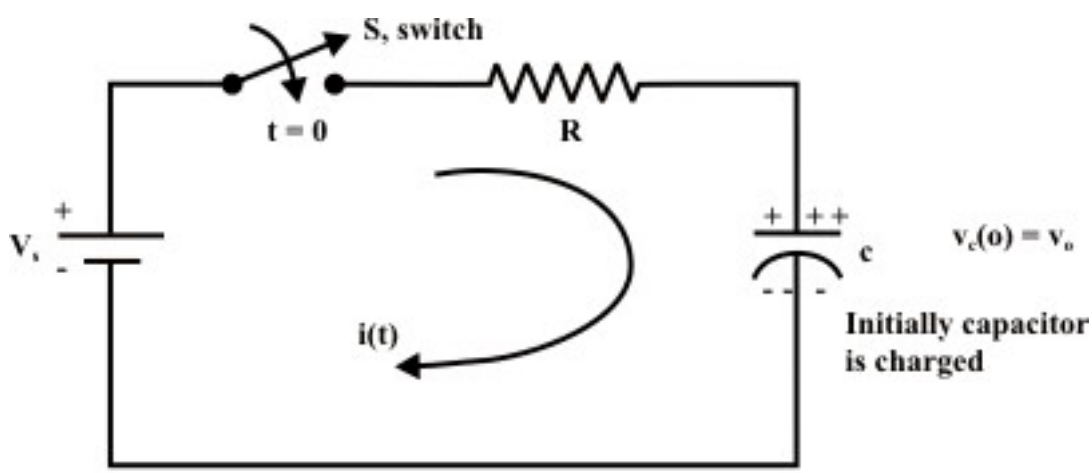

Fig. 10.17(a): Charging of a RC circuit

The switch 'S' is closed at time '$t=0$' (see fig. 10.7(a)). It is assumed that the capacitor is initially charged with a voltage $v_c(0)=v_0$ and the current flowing through the circuit at any instant of time 't' after closing the switch is $i(t)$.

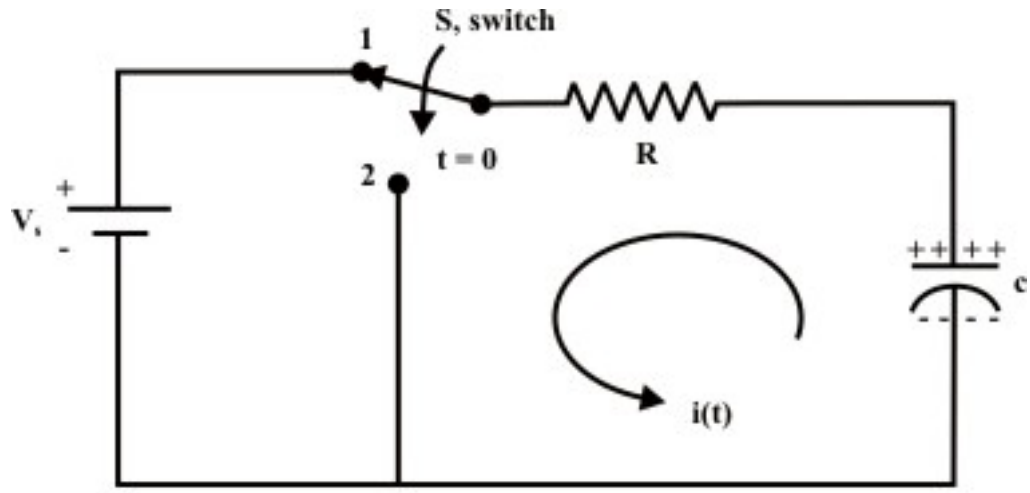

Fig. 10.17(b): Discharging of a RC circuit

The KVL equation around the loop can be written as

$$V_S = R\,i(t) + v_c(t) \Rightarrow V_S = R\,C\frac{d\,v_c(t)}{dt} + v_c(t) \tag{10.41}$$

The solution of the above first-order differential equation (10.41) due to forcing function V_s is given by

$v_c(t) = v_{cn}(t)$ (natural response/transient response) + $v_{cf}(t)$ (steady-state response)

$$= A_1 e^{\alpha t} + A \tag{10.42}$$

The constants A_1, *and* A are computed using the initial and boundary conditions. The value of α is obtained from the characteristic equation given by (see in detail in Appendix)

$$RC\alpha + 1 = 0 \Rightarrow \alpha = -\frac{1}{RC}$$

Eq. (10.42) is then rewritten as

$$v_c(t) = A_1 e^{-\frac{1}{RC}t} + A \tag{10.43}$$

At steady state, the voltage across the capacitor is $v_c(\infty) = v_{cf} = A$ which satisfy the original differential equation (10.41). i.e.,

$$V_S = R\,C\frac{d\,v_{cf}}{dt} + v_{cf} \;\Rightarrow R\,C\frac{d\,A}{dt} + A \Rightarrow A = V_S$$

Using the initial condition (at $t=0$) in equation (10.43), we get

$$v_c(0) = v_0 = A_1 e^{-\frac{1}{RC}\times 0} + A \Rightarrow A_1 = v_0 - A = v_0 - V_S$$

The values of A_1 , A, and Eq. **(**10.43) together will give us the final expression for capacitor voltage as

$$v_c(t) = \left(v_0 - V_S\right) e^{-\frac{1}{RC}t} + V_S \;\Rightarrow\; v_c(t) = V_S\left(1 - e^{-\frac{1}{RC}t}\right) + v_0\, e^{-\frac{1}{RC}t} \tag{10.44}$$

Thus,

$$v_c(t) = \begin{cases} v_0 & t < 0 \\ v_c(t) = V_S\left(1 - e^{-\frac{1}{RC}t}\right) + v_0\, e^{-\frac{1}{RC}t} & t > 0 \end{cases}$$

Response of capacitor voltage with time is shown in fig. 10.18.

Special Case: Assume initial voltage across the capacitor at time '$t = 0$' is zero i.e., $v_c(0) = v_0 = 0$. The voltage expression for capacitor at any instant of time can be written from Eq.(10.44) with $v_c(0) = v_0 = 0$.

Voltage across the capacitance $v_c(t) = V_S\left(1 - e^{-\frac{1}{RC}t}\right)$ (10.45)

Voltage across the resistance $v_R(t) = V_S - v_c(t) = V_S\, e^{-\frac{1}{RC}t}$ (10.46)

Charging current through the capacitor $i(t) = \dfrac{v_R}{R} = \dfrac{V_S}{R} e^{-\frac{1}{RC}t}$ (10.47)

Charge accumulated on either plate of capacitor at any instant of time is given by

$$q(t) = C\, v_c(t) = C\, V_S\left(1 - e^{-\frac{1}{RC}t}\right) = Q\left(1 - e^{-\frac{1}{RC}t}\right) \tag{10.48}$$

where Q is the final charge accumulated in the capacitor at steady state (i.e., $t \to \infty$). Once the voltage across the capacitor $v_c(t)$ is known, the other quantities (like, $v_R(t)$, $i(t)$, *and* $q(t)$) can easily be computed using the above expressions. Fig. 10.19(a) shows growth of capacitor voltage $v_c(t)$ for different choices of circuit parameters (assumed that the capacitor is initially not charged). A sketch for $q(t)$ *and* $i(t)$ is shown in fig. 10.19(b).

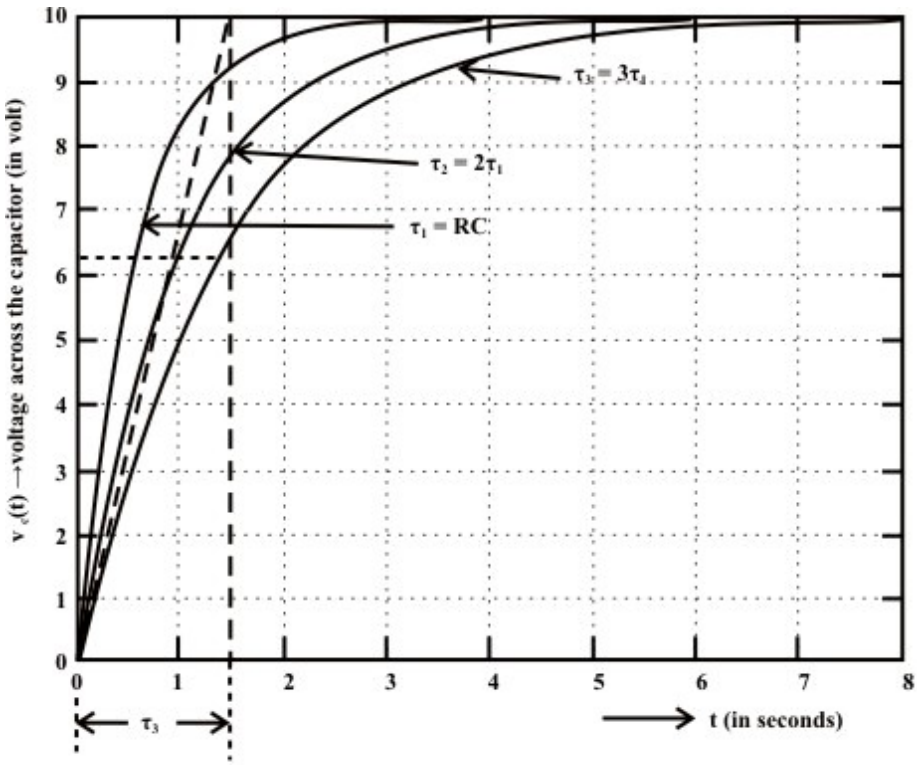

Fig. 10.19(a): Growth of capacitor voltage (assumed initial capacitor voltage is zero)

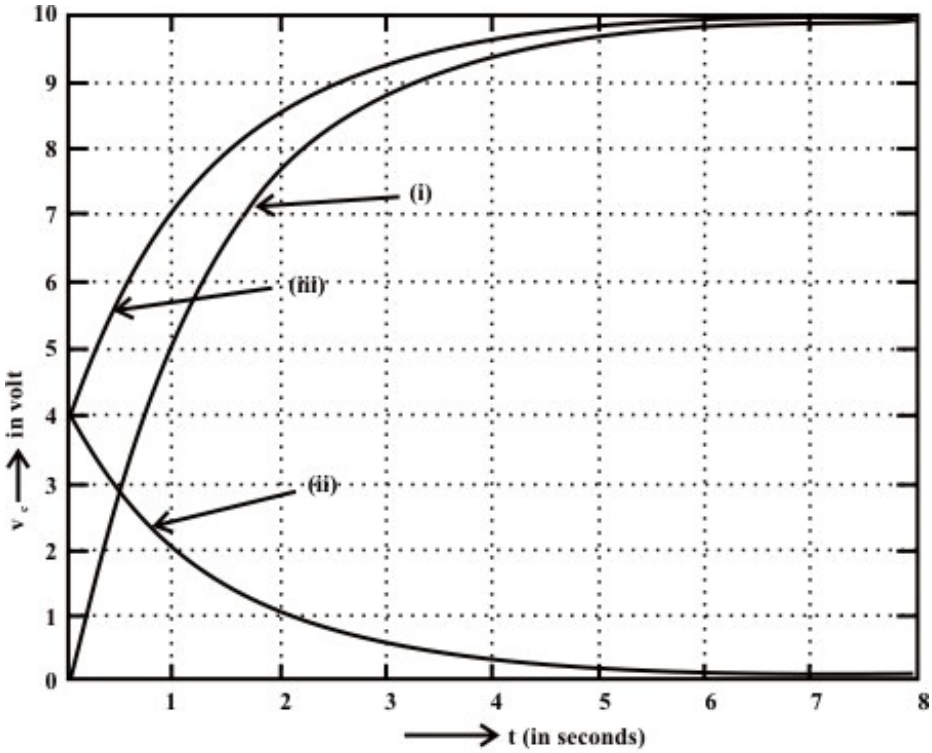

Fig. 10.18: Voltage across the capacitor due to
(i) the forcing function V_s acting alone
(ii) discharge of capacitor initial voltage v_0
(iii) Combine effect of (i) and (ii)

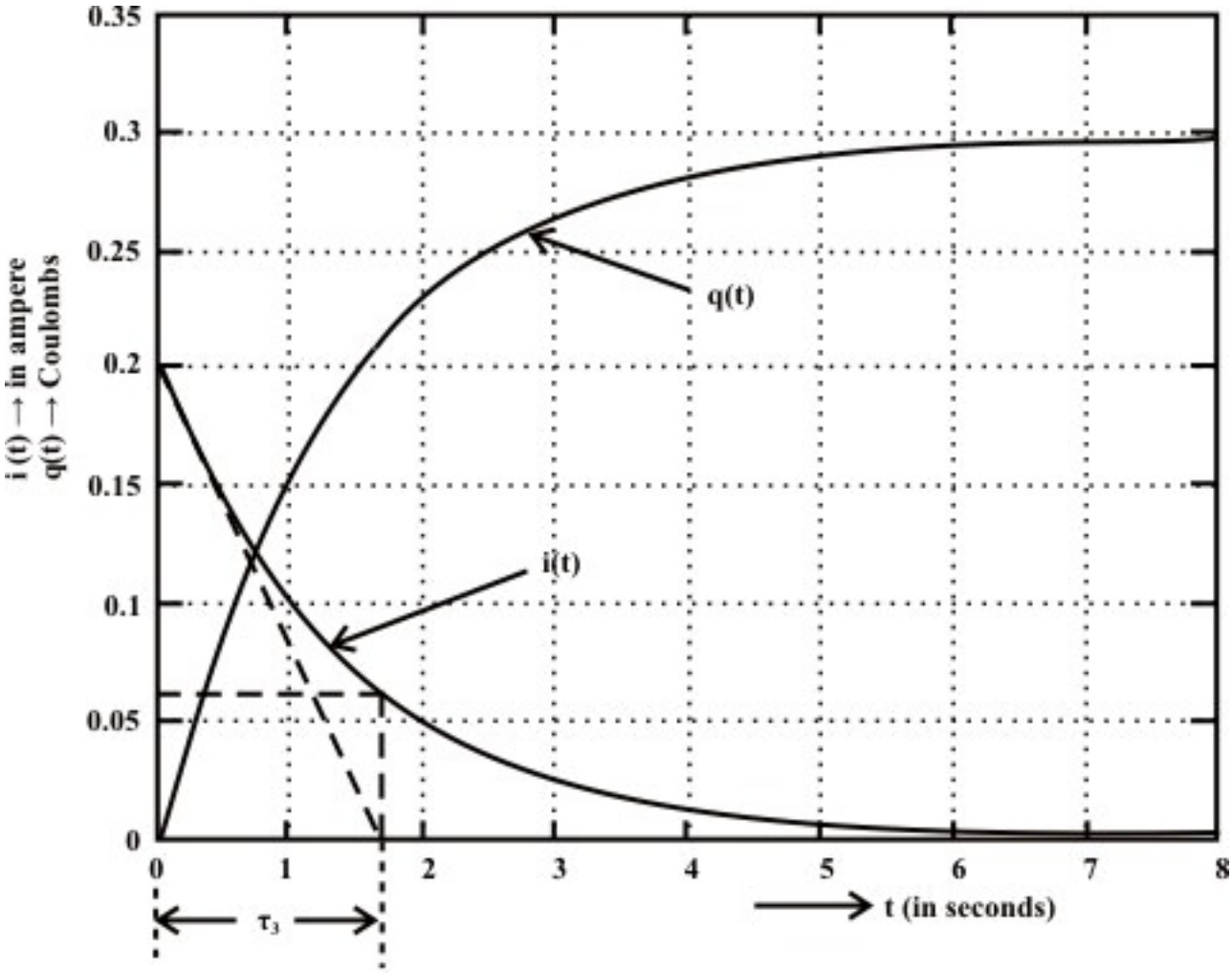

Fig. 10.19(b): System response due to the forcing function V_s (assumed capacitor initial voltage $v_o = 0$)

Following the definition given in section L.10.3.1, time constant of each of the exponential expressions described in Eqs. 10.45 to 10.48 may be found as $\tau = RC$ (for RC circuit).

L.10.4.4 Discharging of a capacitor or Fall of a capacitor voltage in dc circuits

Fig. 10.17(b) shows that the switch 'S' is closed at position '1' for sufficiently long time and the circuit has reached in steady-state condition. At '$t = 0$' the switch' S' is opened and kept in position '2' and remains there. Our job is to find the expressions for (i) voltage across the capacitor (v_c) (ii) voltage across the resistance (v_R) (iii) current $(i(t))$ through the capacitor (discharging current) (iv) discharge of charge $(q(t))$ through the circuit.

Solution: For $t<0$, the switch 'S' in position 1. The capacitor acts like an open circuit to dc, but the voltage across the capacitor is same as the supply voltage V_S. Since, the capacitor voltage cannot change instantaneously, this implies that

$v_c(0^-)=v_c(0^+)=V_S$

When the switch is closed in position '2', the current $i(t)$ will flow through the circuit until capacitor is completely discharged through the resistance R. In other words, the discharging cycle will start at $t=0$. Now applying KVL around the loop, we get

$$R\,C\frac{d\,v_c(t)}{dt}+v_c(t)=0 \tag{10.49}$$

The solution of input free differential equation (10.49) is given by

$$v_c(t)=A_1\,e^{\alpha t} \tag{10.50}$$

where the value of α is obtained from the characteristic equation and it is equal to $\alpha=-\frac{1}{RC}$. The constant A_1 is obtained using the initial condition of the circuit in Eq.(10.50). Note, at '$t=0$'(when the switch is just closed in position '2') the voltage across the capacitor $v_c(t)=V_S$. Using this condition in Eq.(10.50), we get

$$v_c(0)=V_S=A_1\,e^{-\frac{1}{RC}\times 0}\;\Rightarrow\;A_1=V_S$$

Now the following expressions are written as

Voltage across the capacitance $v_c(t)=V_S\,e^{-\frac{1}{RC}t}$ (10.51)

Voltage across the resistance $v_R(t)=-v_c(t)=-V_S\;e^{-\frac{1}{RC}t}$ (10.52)

Charging current through the capacitor $i(t)=\frac{v_R}{R}=-\frac{V_S}{R}e^{-\frac{1}{RC}t}$ (10.53)

An inspection of the above exponential terms of equations from (10.51) to (10.53) reveals that the time constant of RC circuit is given by

$$\tau=RC\ \text{(sec.)}$$

This means that at time $t=\tau$, the capacitor's voltage v_c drops to 36.8% of its initial value **(**see fig. 10.20(a)**)**. For all practical purposes, the dc transient is considered to end after a time span of 5τ. At such time steady state condition is said to be reached. Plots of above equations as a function of time are depicted in fig. 10.20(a) and fig. 10.20(b) respectively.

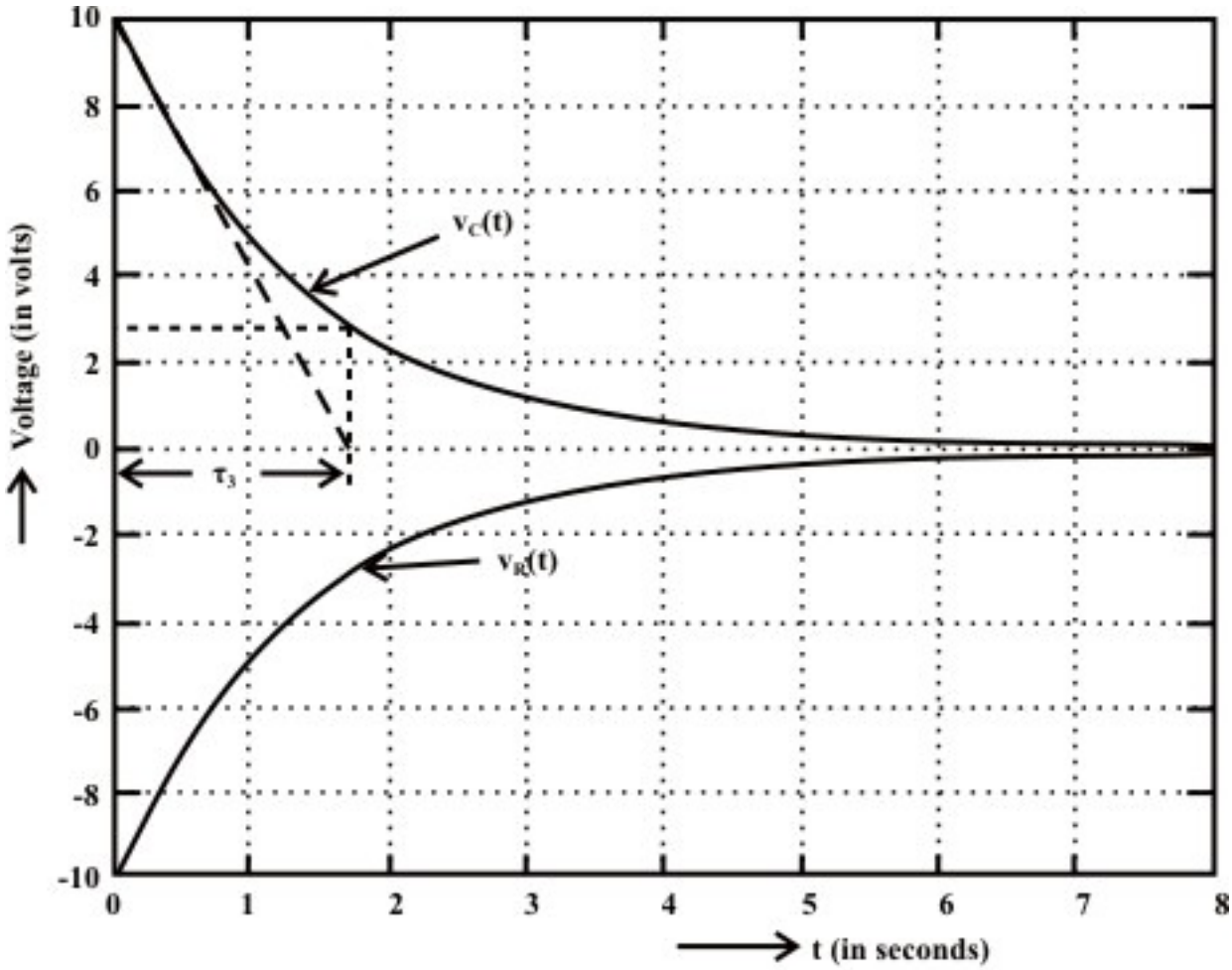

Fig. 10.20(a): Discharge of capacitor voltage with time in R-C circuit

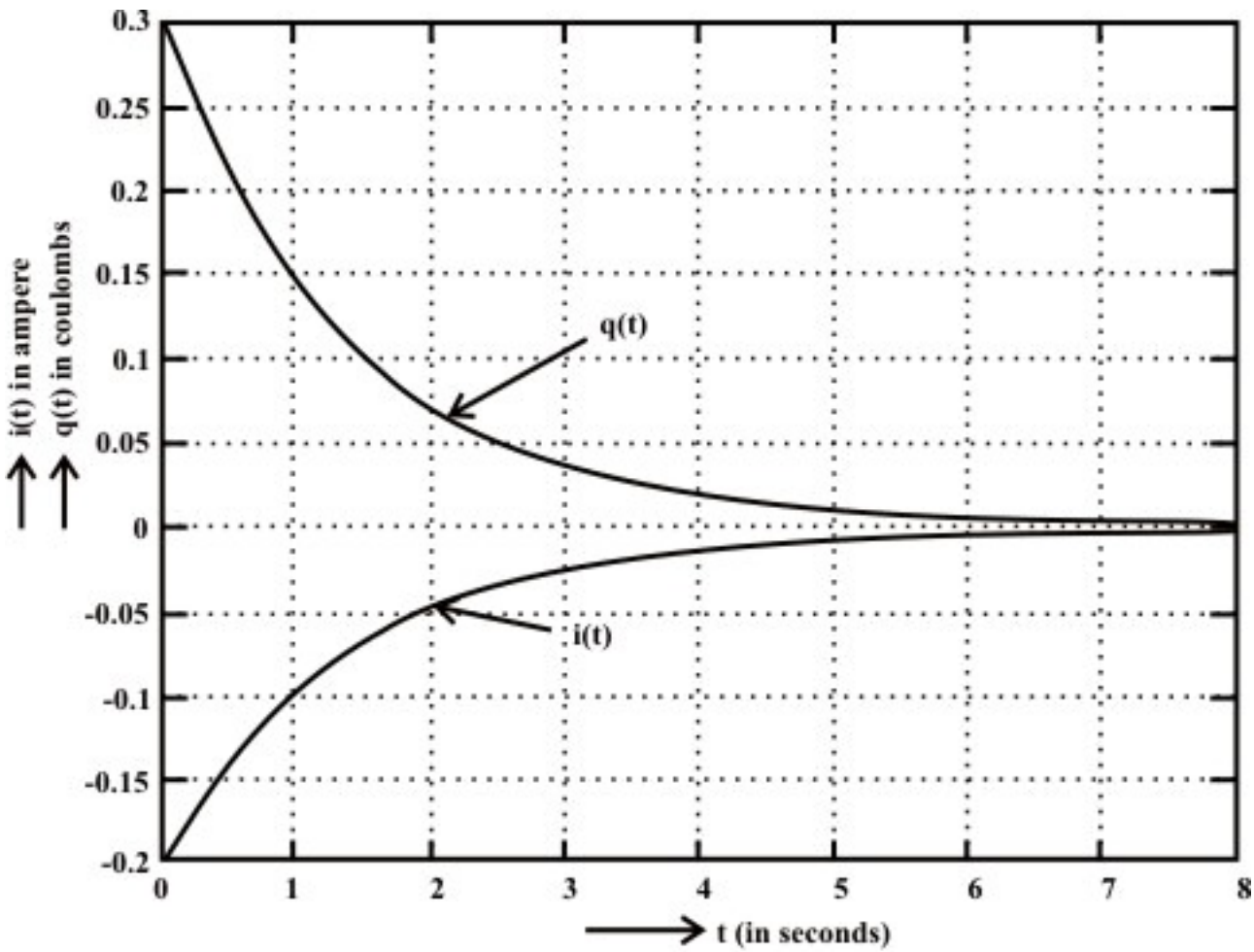

Fig. 10.20(b): System response due to capacitor discharge

L.10.5 Energy stored in a capacitor

The ideal capacitor does not dissipate any of the energy supplied by the source. It stores energy in the form of an electric field between the conducting plates. Let us consider a voltage source V_S is connected to a series $R-C$ circuit and it is assumed that the capacitor is initially uncharged. The capacitor voltage $(v_c(t))$ and current $(i_c(t))$ waveforms during the charging period are shown in fig.10.21 (see the expressions (10.45) and (10.47)) and instantaneous power ($p_c(t) = v_c(t) \times i(t)$) supplied to the capacitor is also shown in the same figure.

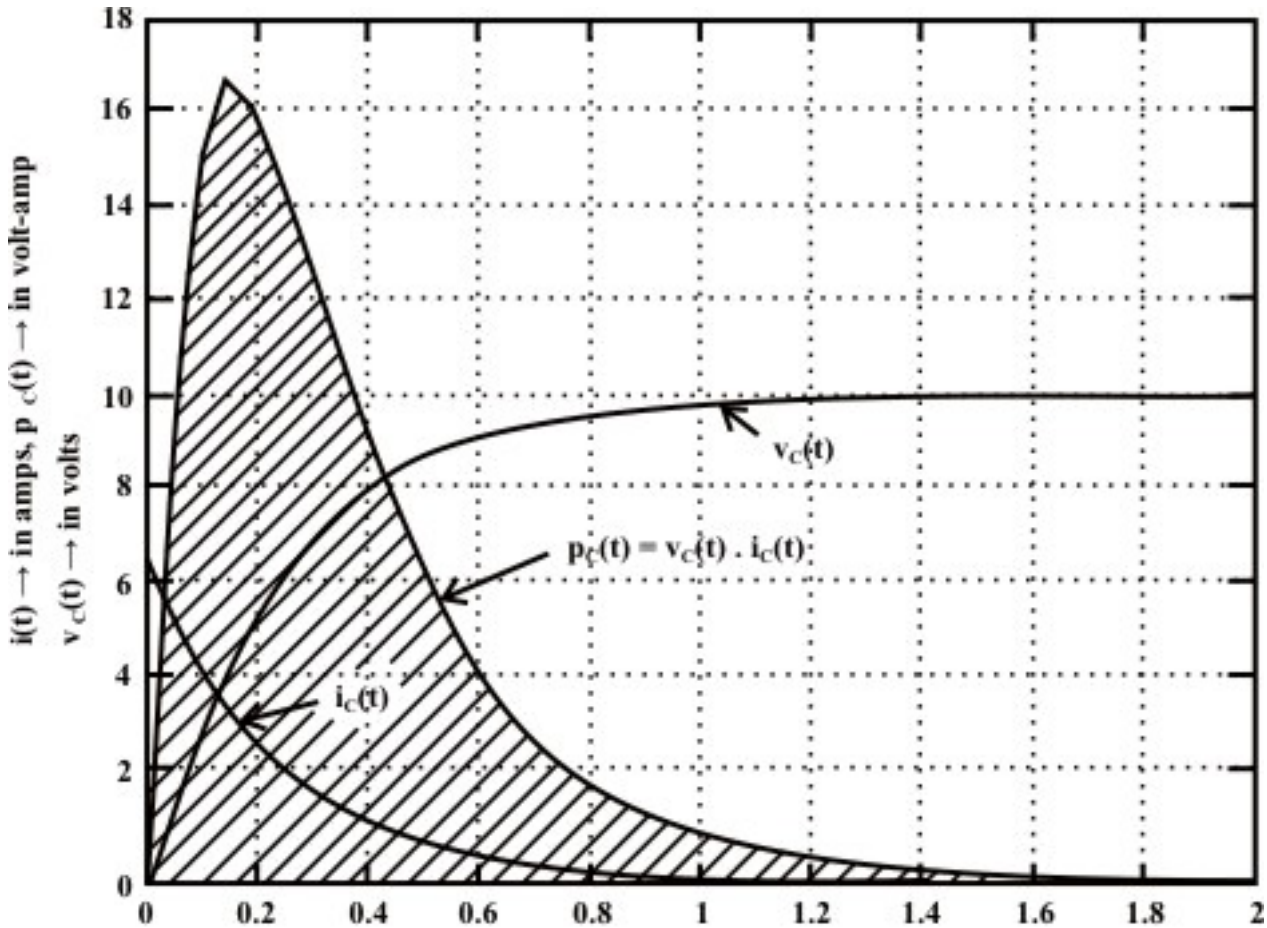

Fig. 10.21: Instantaneous power delivered to the capacitor

Let us consider the instantaneous power supplied to the capacitor is given by

$$p_c(t) = v_c(t) \times i(t) \tag{10.54}$$

Now, the energy supplied to the capacitor in dt second is given by

$$\Delta w = p_c(t) \times dt = v_c(t)\, C \frac{d\, v_c(t)}{dt} \times dt = C\, v_c(t)\, dv_c(t) \tag{10.55}$$

Total energy supplied to the capacitor in t seconds is expressed as

$$w(t) = C \int_{v_c(0)=0}^{v_c(t)=v} v_c(t)\, dv_c(t) = \frac{1}{2} C\, v_c^{\,2} = \frac{1}{2} \frac{q^2(t)}{C} (Joules) \tag{10.56}$$

(Note initial voltage across capacitor is zero and $q(t)$ is the charge accumulated on each plate at a time t) .

When the capacitor is fully charged, its terminal voltage is equal to the source voltage V_S . The amount of energy stored in capacitor in the form of electric field is given by

$$W = \frac{1}{2} C\, V_S^{\,2} = \frac{1}{2} \frac{Q^2}{C} (Joules) \tag{10.57}$$

where Q is the final charge accumulated on each plate of the capacitor at steady state (i.e., $t \to \infty$) i.e., when the capacitor is fully charged.

Example: L.10.6 The switch 'S' shown in fig.L.10.22 is kept open for a long time and then it is closed at time '$t = 0$'. Find (i) $v_c(0^-)$ (ii) $v_c(0^+)$ (iii) $i_c(0^-)$ (iv) $i_c(0^+)$ (v) $\left.\frac{dv_c(t)}{dy}\right|_{t=0^+}$ (vi) find the time constants of the circuit before and after the switch is closed (iv) $v_c(\infty)$

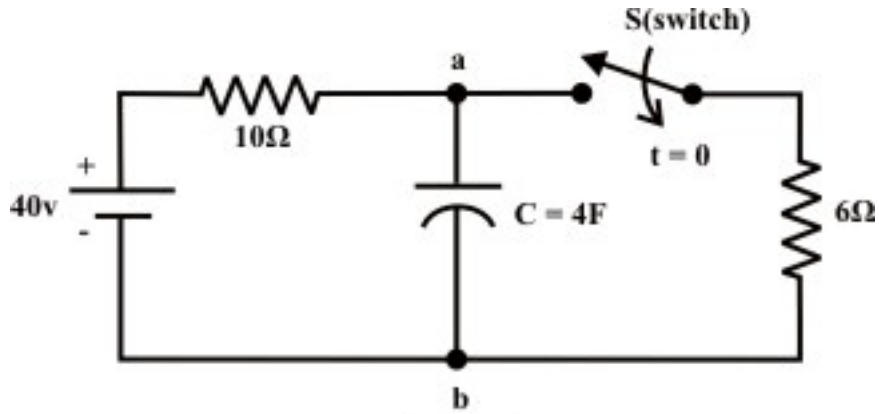

Fig. 10.22

Solution: As we know the voltage across the capacitor $v_c(t)$ cannot change instantaneously due to the principle of conservation of charge. Therefore, the voltage across the capacitor just before the switch is closed $v_c(0^-) =$ voltage across the capacitor just after the switch is closed $v_c(0^+) = 40\ V$ (note the terminal 'a' is positively charged. It may be noted that the capacitor current before the switch 'S' is closed is $i_c(0^-) = 0\ A$. On the other hand, at $t = 0$, the current through 10Ω resistor is zero but the current through capacitor can be computed as

$i_c(0^+) = \frac{v_c(0)}{6} = \frac{40}{6} = 6.66\ A$ (note, voltage across the capacitor cannot change instantaneously at instant of switching). The rate of change of capacitor voltage at time '$t = 0$' is expressed as

$$C\left.\frac{dv_c(t)}{dt}\right|_{t=0^+} = i_c(0) \Rightarrow \frac{dv_c(0^+)}{dt} = \frac{i_c(0^+)}{C} = \frac{6.66}{4} = 1.665\ volt/\sec.$$

Time constant of the circuit before the switch was closed = $\tau = RC = 10 \times 4 = 40\sec.$ Time constant of the circuit after the switch is closed is $\tau = R_{Th}C = \frac{10 \times 6}{10 + 6} \times 4 = 15\sec.$ (replace the part of the circuit than contains only independent sources and resistive elements by an

equivalent Thevenin's voltage source. In this case, we need only to find the Thevenin resistance R_{Th}).

Note: When the switch is kept in closed position, initially the capacitor will be in discharge state and subsequently its voltage will decrease with the increase in time. Finally, at steady state the capacitor is charged with a voltage $v_c(t=\infty)=\frac{40}{10+6}\times 6=15\,V$ (theoretically, time required to reach the capacitor voltage at steady value is $5\tau=5\times 15=75$ sec.).

Example: L.10.7 The circuit shown in Fig.10.23 has been established for a long time. The switch is closed at time $t=0$. Find the current (i) $i_1(0^+),\ i_2(0^+),\ \ i_3(0^+),\ and\ \left.\frac{dv_{de}}{dt}\right|_{t=0^+}$ (ii) at steady state the voltage across the capacitors, $i_1(\infty),\ i_2(\infty)\ and\ i_3(\infty)$.

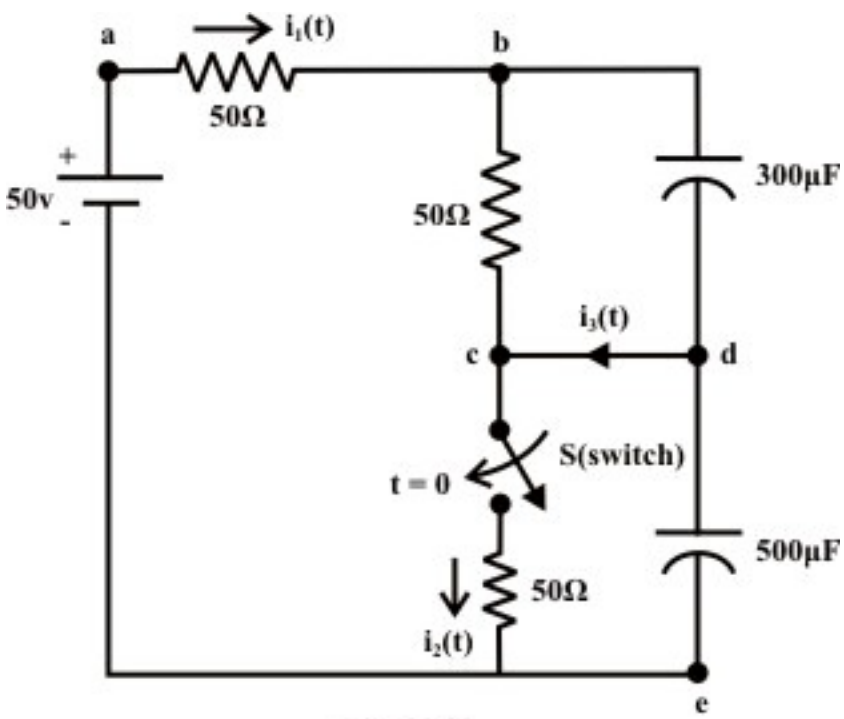

Fig. 10.23

Solution: (i) At $t=0^-$ no current flowing through the circuit, so the voltage at points 'b' and 'd' are both equal to $50\,volt$. When the switch 'S' closes the capacitor voltage remains constant and does not change its voltage instantaneously. The current $i_1(0^+)$ through $a-b$ branch must then equal to zero, since voltage at terminal 'b' is equal to $v_b(0^+)=50\ volt.$, current through $b-c$ is also zero. One can immediately find

out the current through $c-e$ equal to $i_2(0^+)=\frac{50}{50}=1\,A$. Appling KCL at point '$c$', $i_3(0^+)=1A$ which is the only current flow at $t=0^+$ around the loop '$d-c-e-d$. Note the capacitor across '$d-e$' branch acts as a voltage source, the change of capacitor voltage $\left.\frac{dv_{de}}{dt}\right|_{t=0^+} = \frac{1}{500\times10^{-6}}\, i_3(0^+) = 2\ k\,volt/\sec.$

(ii) at steady state the voltage across each capacitor is given

$=\frac{50}{150}\times 50 = 16.666\,volt.$

At steady state current delivered by the source to the different branches are given by

$i_1(\infty)=\frac{50}{150}=0.333\,A;\ i_2(\infty)=0.333\,A\ \ and\ \ i_3(\infty)=0\,A$

Example: L.10.8 The circuit shown in fig. 10.24(a) is switched on at time $t=0$. How long it takes for the capacitor to attain $70\ \%$ of its final voltage? Assume the capacitor is initially not charged. Find also the time constant (τ) of the circuit after the switch is closed.

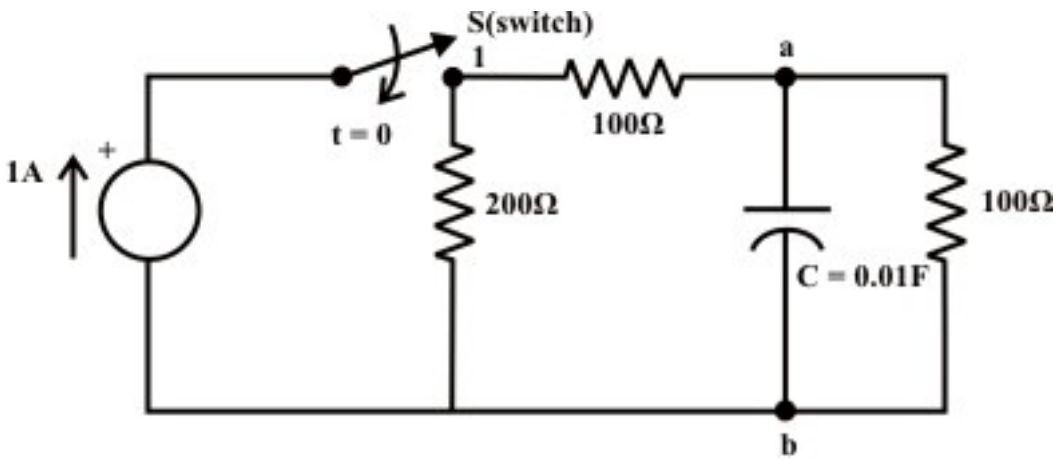

Fig. 10.24(a)

The circuit containing only resistive elements and independent current source (i.e., non-transient part of the circuit) is converted to an equivalent voltage source which is shown in fig.10.24(b).

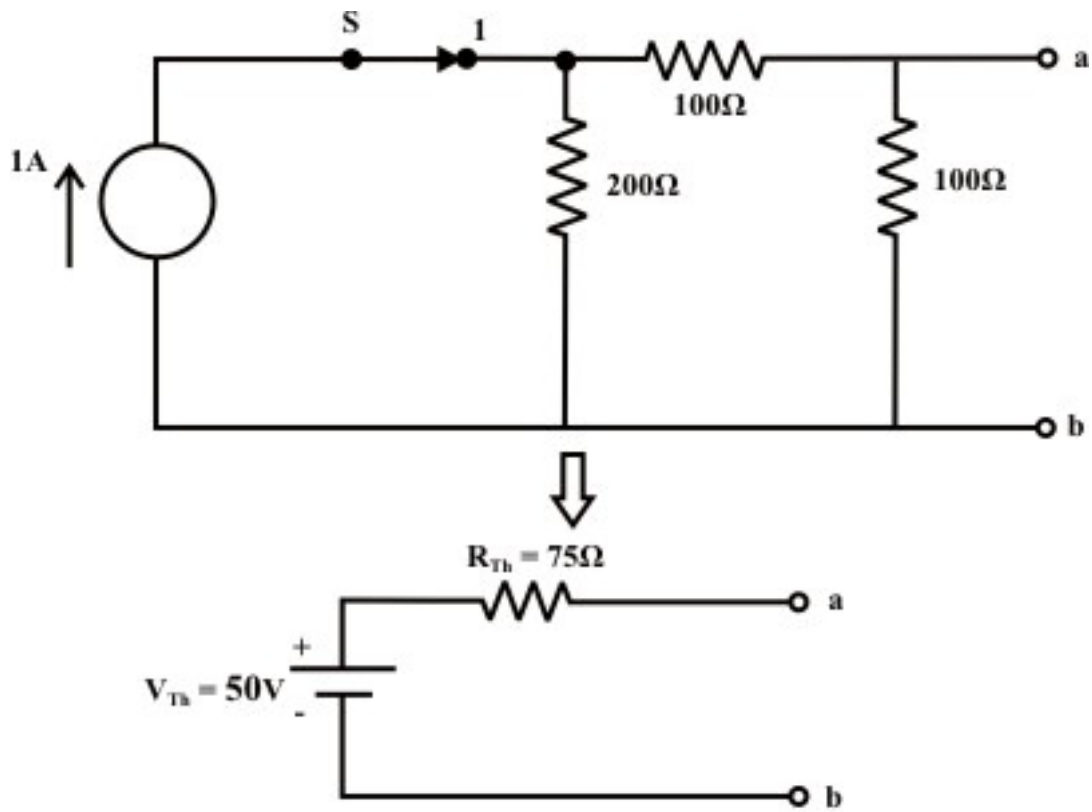

Fig. 10.24(b)

Fig.10.24(c) shows the capacitor C is connected across the Thevenin's voltage terminals 'a' and 'b' in series with Thevenin's resistance R_{Th}.

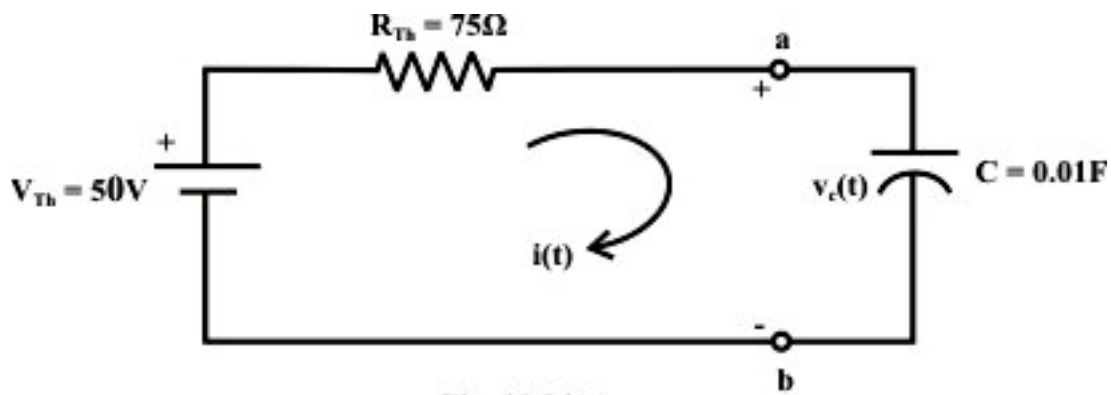

Fig. 10.24(c)

The parameters of Thevenin's voltage source are computed below:

$$V_{Th} = \frac{200}{200+100+100} \times 1 \times 100 = 50V \quad \text{and} \quad R_{Th} = \frac{100 \times 300}{100+300} = 75\Omega$$

Using KVL around the closed path, one can find the current through the capacitor and hence, the voltage across the capacitor.

$$50 = 75 \times i(t) + v_c(t) = 0.75\frac{dv_c(t)}{dt} + v_c(t) \tag{10.58}$$

The solution of the differential equation is given by

$$v_c(t) = A_1 e^{-\frac{1}{RC}t} + A \tag{10.59}$$

Using the initial and boundary conditions of the circuit, we obtain the final expression of voltage across the capacitor $v_c(t)$ as

$$v_c(t) = 50\left(1 - e^{-1.33t}\right) \tag{10.60}$$

Let 't' is the time required to reach the capacitor voltage 70% of its final (i.e., steady state) voltage.

$50 \times 0.7 = 35 = 50\left(1 - e^{-1.33t}\right) \Rightarrow t = 0.91\text{sec}.$

Example: L.10.9 The switch 'S of the circuit shown in fig.10.25(a) is closed at position '1' at $t = 0$.

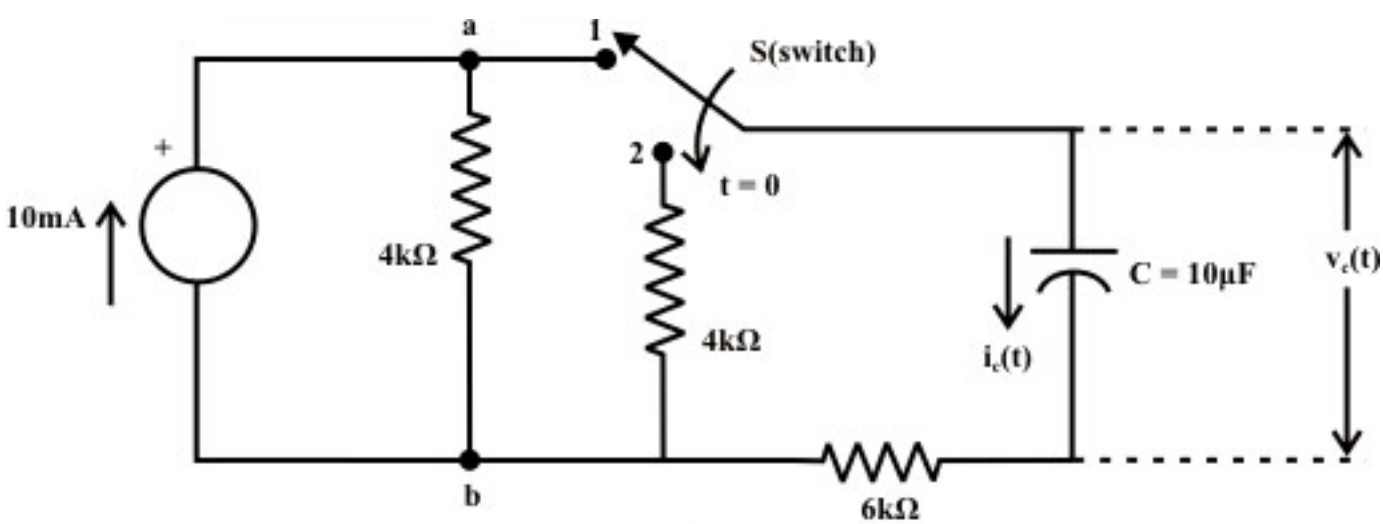

Fig. 10.25(a)

Find voltage $v_c(t)$ and current $i_c(t)$ expressions for $t \geq 0$. Assume that the capacitor is initially fully uncharged (i.e., . $v_c(0) = 0$).

(i) find the mathematical expressions for $v_c(t)$ and $i_c(t)$ if the switch 'S' is thrown into position '2' at $t = \tau$ (sec.) of the charging phase.

(ii) plot the waveforms obtained in parts (i) to (ii) on the same time axis for the voltage $v_c(t)$ and the current $i_c(t)$ using the identified polarity of voltage and current directions.

Solution: (i) The current source is converted to an equivalent voltage source and it is redrawn in fig.10.25(b) when the switch 'S' is in position '1'.

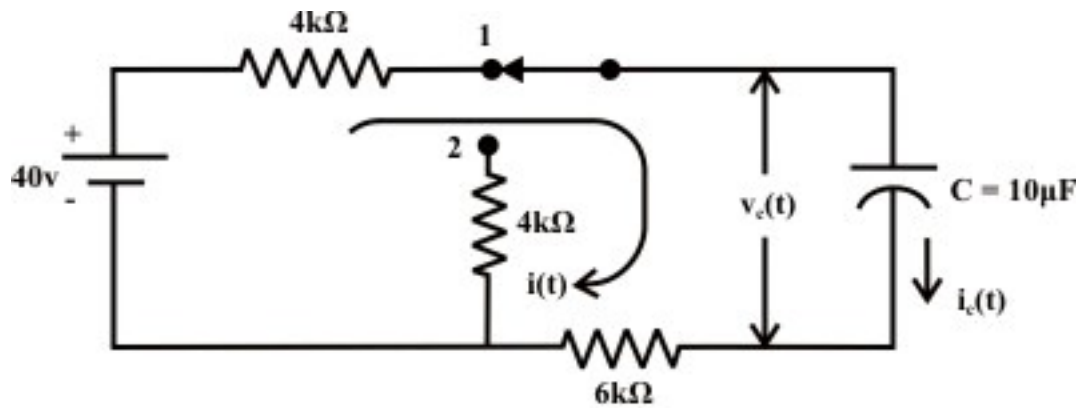

Fig. 10.25(b)

KVL around the closed path:

$$40 = 10 \times i(t) + v_c(t), \quad where \quad i(t) \ is \ in \ mA.$$

$$40 = 10 \times C\frac{dv_c(t)}{dt} + v_c(t) \tag{10.61}$$

The voltage expression across the capacitor using the initial and boundary conditions of the circuit, one can write $v_c(t)$ as

$$v_c(t) = 40\left(1 - e^{-\frac{1}{RC}t}\right) = 40\left(1 - e^{-\frac{1}{10\times10^3\times10\times10^{-6}}t}\right) = 40\left(1 - e^{-10t}\right) \tag{10.62}$$

$$i_c(t) = \frac{40 - v_c(t)}{10} = \frac{40\ e^{-10t}}{10} = 4 \times e^{-10t}\ (in\ \ mA) \tag{10.63}$$

Note that the time constant of the circuit in part (i) is $\tau = RC = 100\ \ m\sec$.

(ii) The switch 'S' is thrown into position '2' at $t = \tau = 0.1\sec.$ and the corresponding circuit diagram is shown in fig.10.25(c).

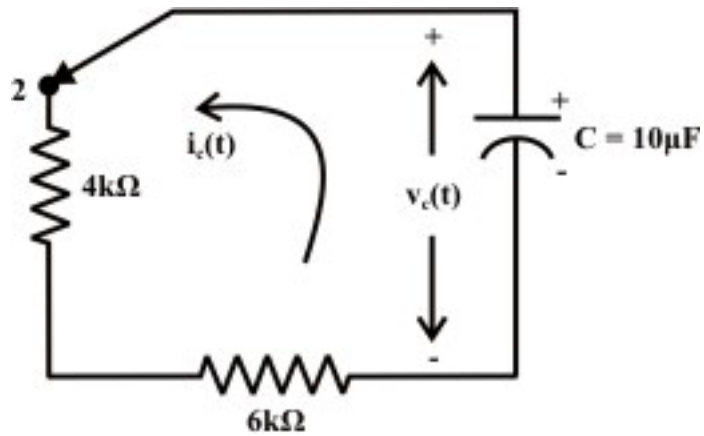

Fig. 10.25(c)

Note, at time $t=\tau=0.1\text{sec.}$, the capacitor is charged with a voltage = $v_c(\tau=0.1)=40\left(1-e^{-10\times0.1}\right)=40\times0.632=25.28V$ and at the same time ($t=\tau=0.1\text{sec.}$) the current in capacitor is $4\times e^{-10t}$ = $4\times0.368=1.472\ (in\ mA)$. Considering the fig.10.25(c), one can write KVL around the closed path

$$v_c(t)\ +C\frac{dv_c(t)}{dt}\times R_{eq}=0 \tag{10.64}$$

where $R_{eq}=4+6=10\,k\Omega$ and the capacitor is now in discharging phase.

The solution of Eq.(10.64) can be found using the initial and final voltage of the capacitor (initial voltage $v_c(t=\tau=0.1)=25.28\ V$, $v_c(t-\tau=\infty)=0\ V$) and it is given by

$$v_c(t)=v_c(\tau=0.1)\times e^{-\frac{1}{R_{eq}C}(t-\tau)}=25.28\times e^{-10(t-\tau)} \tag{10.65}$$

Discharging current expression is given by (note, current direction is just opposite to the assigned direction and it is taken into account with a –ve sign)

$$i_c(t)=-\frac{v_c(t)}{R_{eq}}=-\frac{25.28\times e^{-10(t-\tau)}}{10}=-2.528\times e^{-10(t-\tau)}\ (in\ mA) \tag{10.66}$$

(Note, the above two expressions are valid only for $t\geq\tau$)

The circuit responses for charging and discharging phases in (i) and (ii) are shown in fig.10.25 (d).

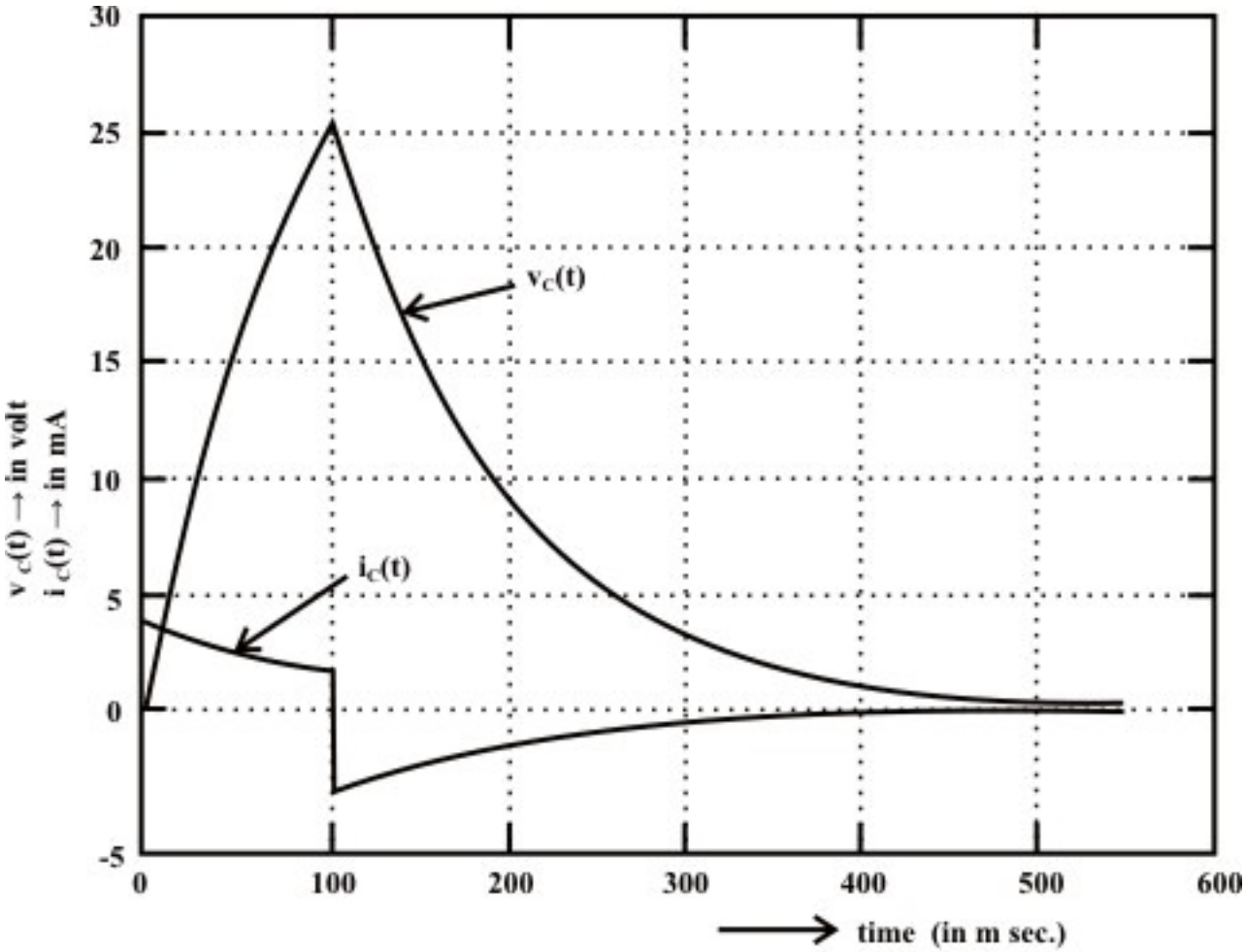

Fig. 10.25(d): Complete response of the circuit indicating charging and discharging phases.

Remark-6 Note that the current through the capacitor (see fig. 10.25(d)) can change instantaneously like the voltage across the inductor.

Appendix-A

L.10.A Solution of nth order linear time invariant differential equation excited by forcing function.

Let us consider a linear time invariant circuit having several energy source elements is described by the following dynamic equation.

$$a_n \frac{d^n x}{dt^n} + a_{n-1} \frac{d^{n-1} x}{dt^{n-1}} + a_{n-2} \frac{d^{n-2} x}{dt^{n-2}} + \bullet\bullet\bullet + a_1 \frac{dx}{dt^n} + a_0 x = f(t) \qquad (10.A1)$$

where $a_1, a_2, a_3, \bullet\bullet\bullet\ a_{n-1}, a_n$ are constant coefficients associated in the differential equation and they are dependent on circuit parameters (like, $R, L, and\ C$ for electric circuit) but independent of time, $f(t)$ is the forcing or driving function and $x(t)$ is the solution of differential equation or response of the system. We shall discussion the

solution of differential equation restricted to second order differential, say $n=2$ in equation (10.A1).

$$a_2 \frac{d^2x}{dt^2} + a_1 \frac{dx}{dt} + a_0 x = f(t) \qquad (10.A2)$$

The solution of this differential equation provides the response of circuit and it is given by

$$x(t) = x_n(t) + x_f(t) \qquad (10.A3)$$

where $x_n(t)$ is the natural response of circuit, obtained by setting $f(t) = 0$, and $x_f(t)$ is the forced response that satisfies the original differential equation (10.A2).

By setting $f(t)=0$ in equation (10.A2), as given in equation (10.A4), the force free equation is obtained.

$$a_2 \frac{d^2x}{dt^2} + a_1 \frac{dx}{dt} + a_0 x = 0 \qquad \text{(Homogeneous equation)} \qquad (10.A4)$$

The solution of such differential equation (or homogeneous equation) is known as natural solution or complementary solution or transient solution and it is denoted by $x_n(t)$. To get the natural solution $x_n(t)$ of equation (10.A4) the following steps are considered.

Let us use the following operators

$$\frac{d}{dt} = \alpha; \quad \frac{d^2}{dt^2} = \frac{d}{dt}\left(\frac{d}{dt}\right) = \alpha^2$$

in equation (10.A4) and results an equation given by

$$\left(a_2 \alpha^2 + a_1 \alpha + a_0\right) x = 0$$

Since $x \neq 0$, the above equation can be written as

$$\left(a_2 \alpha^2 + a_1 \alpha + a_0\right) = 0 \qquad (10.A5)$$

which is known as characteristic equation for a circuit whose force free equation is Eq.(10.A4). The natural or transient solution of Eq.(10.A4) is expressed by the exponential terms as given below.

$$x_n(t) = A_1 e^{\alpha_1 t} + A_2 e^{\alpha_2 t} \qquad (10.A6)$$

where α_1 *and* α_2 are the roots of characteristic equation (10.A5). The roots of second order characteristic equation with real coefficients is either real or complex occur in conjugate pairs. The constants A_1 *and* A_2 are evaluated from initial or boundary conditions of circuit. The principles of continuity of inductance current and capacitance voltage are used to establish the required boundary conditions.

If $x_n(t)$ is the natural or transient solution of unforced (or homogeneous) equation differential, it must satisfy its own differential equation

$$a_2 \frac{d^2 x_n}{dt^2} + a_1 \frac{dx_n}{dt} + a_0 x_n = 0 \tag{10.A7}$$

Further, if $x(t) = x_n(t) + x_f(t)$ is the complete solution of given differential Eq.(10.A2), it must satisfy its own equation

$$a_2 \frac{d^2\left(x_n + x_f\right)}{dt^2} + a_1 \frac{d\left(x_n + x_f\right)}{dt} + a_0\left(x_n + x_f\right) = f(t) \tag{10.A8}$$

Using the equation (10.A7) in Eq.(10.A8), we get

$$a_2 \frac{d^2 x_f}{dt^2} + a_1 \frac{dx_f}{dt} + a_0 x_f = f(t) \tag{10.A9}$$

The above equation implies that $x_f(t)$ is the forced solution or steady state solution of second order differential equation (10.A2). Steady state solution of some common forcing functions is listed in Table (assume $a_2 > 0$,$a_1 > 0$ and $a_0 > 0$).

Table: Steady state solution $x_f(t)$ for any order differential equation excited by some common forcing function.

Type of forcing function $f(t)$ (input)	Steady state solution $x_f(t)$ (output)
• $f(t) = K$ (constant)	• $x_f(t) = A$ (constant)
• $f(t) = Kt$	• $x_f(t) = At + B$
• $f(t) = Kt^2$	• $x_f(t) = At^2 + Bt + C$
• $f(t) = Ke^{at}$	• $x_f(t) = Ae^{at}$
• $f(t) = \sin bt$	• $i_f(t) = A\sin bt + B\cos bt$
• $f(t) = cos\, bt$	• $i_f(t) = A\sin bt + B\cos bt$
• $f(t) = e^{at}\sin bt$	• $i_f(t) = e^{at}\left(A\sin bt + B\cos bt\right)$
• $f(t) = e^{at}\cos bt$	• $i_f(t) = e^{at}\left(A\sin bt + B\cos bt\right)$

Coefficients involve in the steady state solution can be found out by using the boundary conditions of the circuit.

Remark-7

(i) Eq. (10.A2) is the differential equation description of a linear circuit, superposition may be used to find the complete solution of a forcing function which is sum of natural and steady state responses. (ii) Eq.(10.A6) is the natural solution of force-free linear differential equation. Note that the constants α_1 and α_2 are the roots of the characteristic equation (10.A5) and they are entirely depending on the circuit parameters. The roots of the characteristic equation may be classified as

Case-1: Real or Complex but distinct

The natural solution of homogeneous equation (10.A4) is given as

$x_n(t) = A_1 e^{\alpha_1 t} + A_2 e^{\alpha_2 t}$

Case-2: Roots are repeated (i.e. $\alpha_1 = \alpha_2 = \alpha$ or multiplicity of roots of order 2)

The natural solution of homogeneous equation (10.A4) is given as

$x_n(t) = \beta_0 e^{\alpha t} + \beta_1 t$

Using initial and final conditions of the circuit, β_0 *and* β_1 constants are computed. More discussions on these issues can be seen in Lesson-11.

L.10.6 Test your understanding **(Marks: 70)**

T.10.1 Inductor tends to block ---------- current but pass ---------- current.

T.10.2 The basic fundamental principle that explains the action of an inductor is known as ---------- law.

T.10.3 Exponential waveforms start ------ and finish ----------.

T.10.4 A transient approximately always has a duration of -------- time constants.

T.10.5 After the first time constant, a transient goes through ---------- % of its steady state value.

T.10.6 -------- through inductor cannot change --------- but -------- across the inductor can --------- instantaneously at the switching phase.

T.10.7 A simple series $R-L$ circuit is excited with a constant voltage source, the speed of response depends on ---------- and ------- of the circuit.

T.10.8 The energy stored in an inductor in the form of ----------.

T.10.9 In a first order circuit if the resistor value is doubled, the time constant is halved for an -------- circuit.

T.10.10 An inductor acts as ---------- for a ---------- current through it.

T.10.11 Once a capacitor has been charged up, it is able to act like a --------.

T.10.12 If the spacing between the plates is doubled, the capacitance value is ----------.

T.10.13 After a capacitor is fully charged in a dc circuit, it ---------- dc current.

T.10.14 The time rate of change of capacitor voltage is represented by the ------- tangent line to the $v_c(t)$-versus- t curve.

T.10.15 Immediately after a switch has been thrown, a capacitor's ---------- must maintain the same value that excited just before the switching instant.

T.10.16 At the instant of switching, current through the capacitor ---------- instantaneously.

T.10.17 At steady state condition in a dc circuit, the capacitor acts as an ----- circuit.

T.10.18 A first order circuit with a single resistor, if the resistor is doubled in value, the time constant is also ----- for an $R-C$ circuit.

T.10.19 Time constant of a first order system is the measure of ---------- response of the circuit.

T.10.20 The energy stored in a capacitor in the form of ---------- . [1×20]

T.10.21 For the circuit of fig.10.26, find (i) $i_1(0^-)$, $i_L(0^-)$ (ii) $i_1(0^+)$, $i_L(0^+)$ (iii) $i_1(t=\infty)$, $i_L(t=\infty)$ (iv) $v_{ab}(0^+)$, $v_{ab}(t=\infty)$.

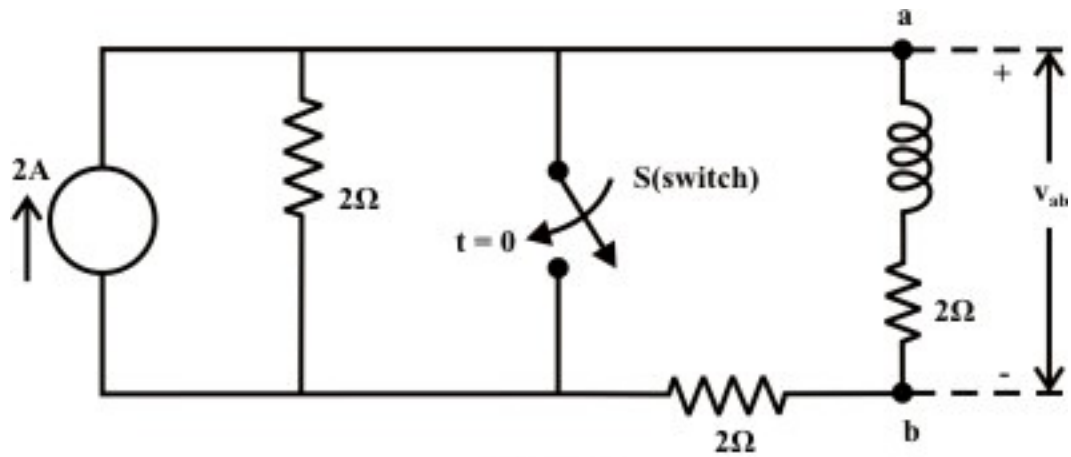

Fig. 10.26

(Ans. (i) 0, $0.666\,A$ (ii) $1.333\,A$, $0.666\,A$ (iii) $2\,A$, $0\,A$ (iv) $-1.332\,V$, $0\,V$) [8]

T.10.22 For the circuit shown in Fig.10.12, the switch 'S' has been opened for a long time and then closes at t=0.

Find,
(i) $v_{ab}(0^-)$ (ii) $i_x(0^-)$ (iii) $i_x(0^+)$ (iv) $v_{ab}(0^+)$ (v) $i_x(t=\infty)$ (vi) $v_{ab}(t=\infty)$ (vii) $i_x(t)$ for $t>0$
(Ans. [10]

T.10.23 In the circuit shown in fig.10.27, the switch was initially open and no current was flowing in inductor (L). The switch was closed at $t=0$ and than re opened at $t=2\tau$ sec. At $t=0$, $\frac{d_{i_L}(t)}{dt}$ was $50\,A/s$.

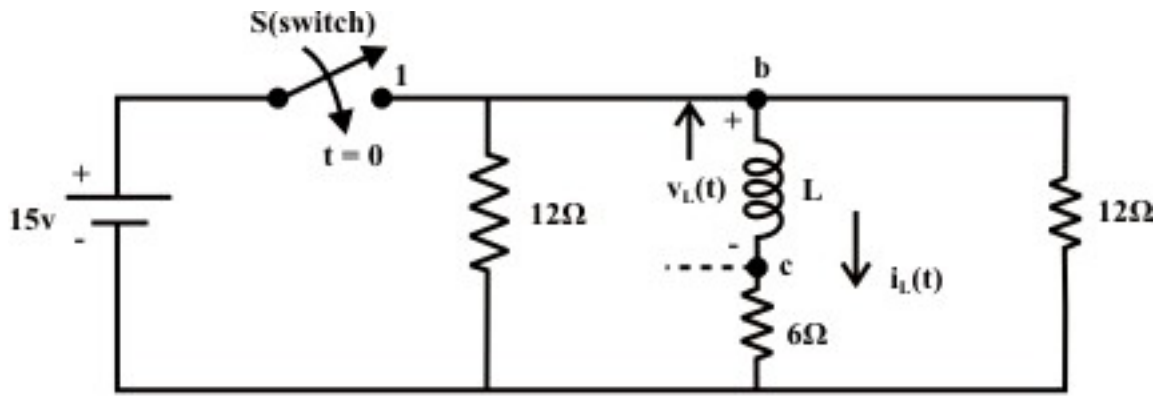

Fig. 10.27

Find,

(i) The value of L

(ii) Find the current $i_L(t)$ and voltage $v_{bc}(t)$ expressions for $t \geq 0$. Assume, no current was flowing through the inductor at $t = 0$ (i.e., . $i_L(0) = 0$).

(iii) Find the mathematical expressions for $i_L(t)$ and $v_{bc}(t)$ if the switch 'S' is reopened at $t = 2\tau$ (sec.).

(iv) Plot the waveforms obtained in parts (ii) to (iii) on the same time axis (time$\rightarrow$ in ms.) for the current $i_L(t)$ and the voltage $v_{bc}(t)$ considering the indicated current directions and identified polarity of voltage across the $b-c$ terminals.

(Ans. (i) $0.3H$ (ii) $i_L(t) = 1.25 \times \left(1 - e^{-40t}\right)$ *amp.*, $v_{bc}(t) = 15 \times e^{-40t}$

(iii) $i_L(t) = 1.081 \times e^{-40(t-\tau)}$, $v_{bc}(t) = 12.96 \times e^{-40(t-2\tau)}$, *for* $t \geq 2\tau$.) [10]

T.10.24 At steady state condition, find the values of I_1, I_2, I_3, I_4, I_5, V_1 and V_2 for the circuit shown in fig.10.28.

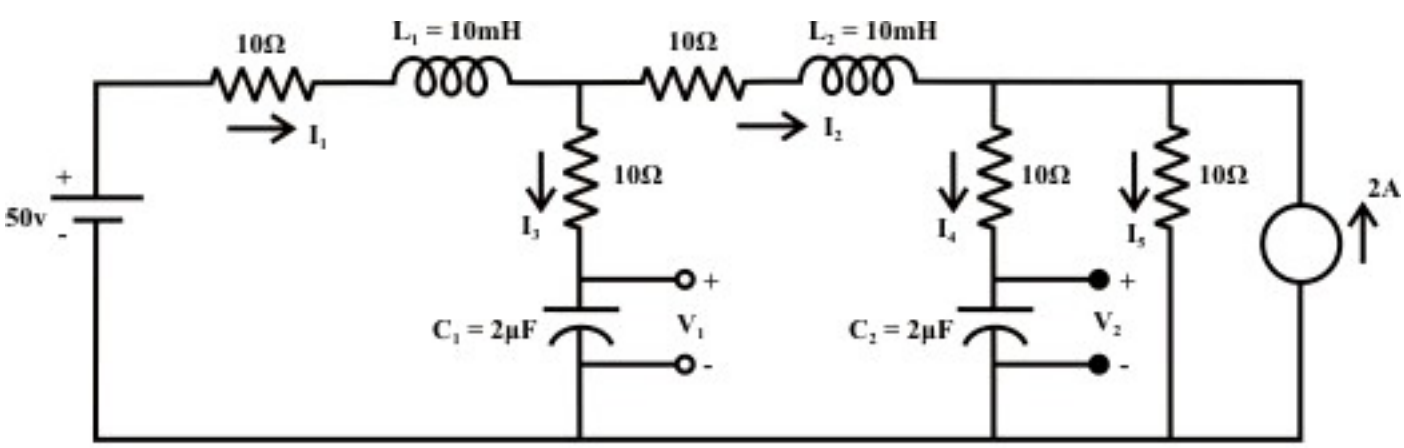

Fig. 10.28

(Ans. $I_1 = I_2 = I_5 = 1A,\ I_4 = I_3 = 0,\ V_1 = 40V$ *and* $V_2 = 30V$ **)** [6]

T.10.25 Switch ‘ S ’ shown in fig.10.29 is kept in position ‘1’for a long time.

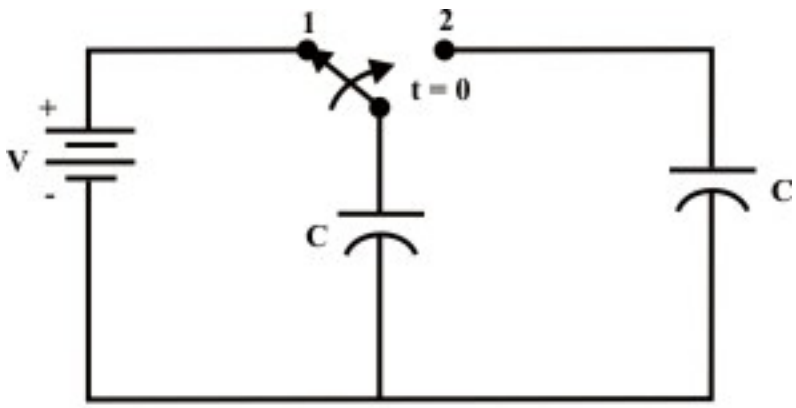

Fig. 10.29

When the switch is thrown in position ‘ 2 ’, find at steady state condition
(i) the voltage across the each capacitor (ii) the charge across the each capacitor (iii) the energy stored by the each capacitor

(Ans. (i) $(i)\ \frac{V}{2}\quad (ii)\ C\frac{V}{2}\ (iii)\ C\frac{V^2}{8}$) [6]

T.10.26 For the circuit shown in fig.10.30, Switch ‘ S ’ is kept in position ‘1’ for a long time and then it is thrown in position ‘ 2 ’ at time $t=0$. Find (a) the current expression $i(t)$ for $t \geq 0$ (b) calculate the time constants of the circuit before and after the switching phases.

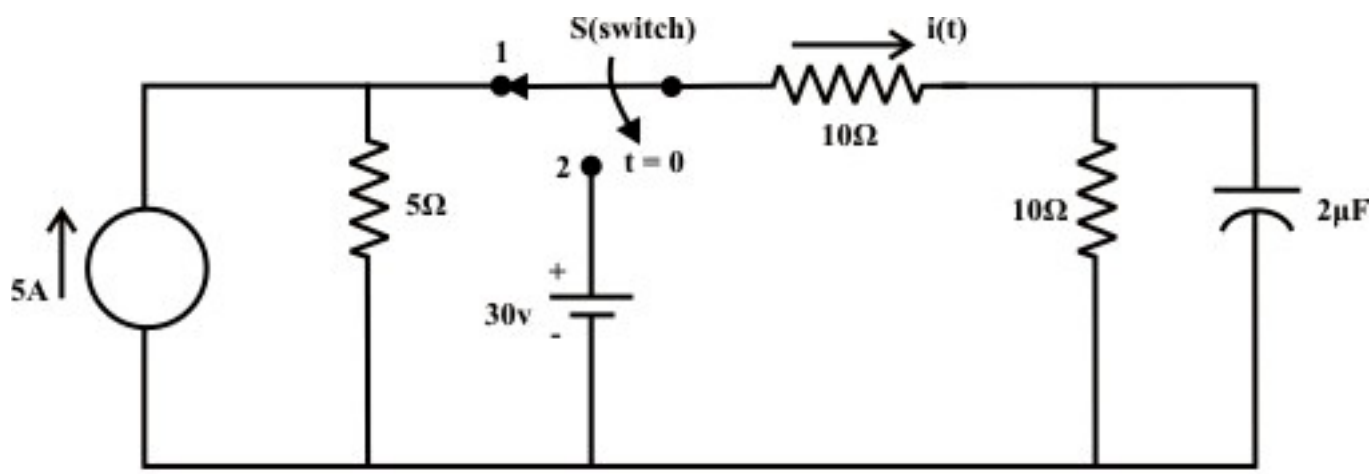

Fig. 10.30

(Ans. $(a)\ i(t) = 1.5 + 0.5e^{-10^5 t}$ $(b)\ 12\,\mu s$ (before the switch is opened), $(b)\ 10\,\mu s$ (after the switch is opened, i.e., when the switch is in position ‘ 2 ’)) [10]

Module 3

DC Transient

Lesson 11

Study of DC transients in R-L-C Circuits

Objectives

- Be able to write differential equation for a dc circuits containing two storage elements in presence of a resistance.
- To develop a thorough understanding how to find the complete solution of second order differential equation that arises from a simple $R-L-C$ circuit.
- To understand the meaning of the terms (i) overdamped (ii) criticallydamped, and (iii) underdamped in context with a second order dynamic system.
- Be able to understand some terminologies that are highly linked with the performance of a second order system.

L.11.1 Introduction

In the preceding lesson, our discussion focused extensively on dc circuits having resistances with either inductor (L) or capacitor (C) (i.e., single storage element) but not both. Dynamic response of such first order system has been studied and discussed in detail. The presence of resistance, inductance, and capacitance in the dc circuit introduces at least a second order differential equation or by two simultaneous coupled linear first order differential equations. We shall see in next section that the complexity of analysis of second order circuits increases significantly when compared with that encountered with first order circuits. Initial conditions for the circuit variables and their derivatives play an important role and this is very crucial to analyze a second order dynamic system.

L.11.2 Response of a series R-L-C circuit due to a dc voltage source

Consider a series $R-L-C$ circuit as shown in fig.11.1, and it is excited with a dc voltage source V_s. Applying KVL around the closed path for $t>0$,

$$L\frac{di(t)}{dt}+Ri(t)+v_c(t)=V_s \tag{11.1}$$

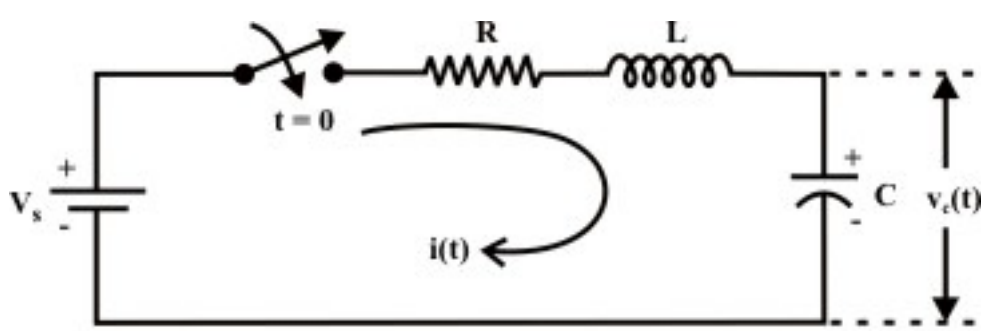

Fig. 11.1: A Simple R-L-C circuit excited with a dc voltage source

The current through the capacitor can be written as

$$i(t) = C\frac{dv_c(t)}{dt}$$

Substituting the current '$i(t)$'expression in eq.(11.1) and rearranging the terms,

$$LC\frac{d^2v_c(t)}{dt^2} + RC\frac{dv_c(t)}{dt} + v_c(t) = V_s \tag{11.2}$$

The above equation is a 2nd-order linear differential equation and the parameters associated with the differential equation are constant with time. The complete solution of the above differential equation has two components; the transient response $v_{cn}(t)$ and the steady state response $v_{cf}(t)$. Mathematically, one can write the complete solution as

$$v_c(t) = v_{cn}(t) + v_{cf}(t) = \left(A_1 e^{\alpha_1 t} + A_2 e^{\alpha_2 t}\right) + A \tag{11.3}$$

Since the system is linear, the nature of steady state response is same as that of forcing function (input voltage) and it is given by a constant value A. Now, the first part $v_{cn}(t)$ of the total response is completely dies out with time while $R > 0$ and it is defined as a transient or natural response of the system. The natural or transient response (see Appendix in Lesson-10) of second order differential equation can be obtained from the homogeneous equation (i.e., from force free system) that is expressed by

$$LC\frac{d^2v_c(t)}{dt^2} + RC\frac{dv_c(t)}{dt} + v_c(t) = 0 \Rightarrow \frac{d^2v_c(t)}{dt^2} + \frac{R}{L}\frac{dv_c(t)}{dt} + \frac{1}{LC}v_c(t) = 0$$

$$a\frac{d^2v_c(t)}{dt^2} + b\frac{dv_c(t)}{dt} + c\,v_c(t) = 0 \text{ (where } a = 1,\ b = \frac{R}{L} \text{ and } c = \frac{1}{LC}\text{)} \tag{11.4}$$

The characteristic equation of the above homogeneous differential equation (using the operator $\alpha = \frac{d}{dt}$, $\alpha^2 = \frac{d^2}{dt^2}$ and $v_c(t) \neq 0$) is given by

$$\alpha^2 + \frac{R}{L}\alpha + \frac{1}{LC} = 0 \quad \Rightarrow a\alpha^2 + b\alpha + c = 0 \text{ (where } a = 1,\ b = \frac{R}{L} \text{ and } c = \frac{1}{LC}\text{)} \tag{11.5}$$

and solving the roots of this equation (11.5) one can find the constants α_1 *and* α_2 of the exponential terms that associated with transient part of the complete solution (eq.11.3) and they are given below.

$$\alpha_1 = \left(-\frac{R}{2L} + \sqrt{\left(\frac{R}{2L}\right)^2 - \frac{1}{LC}}\right) = \left(-\frac{b}{2a} + \frac{1}{a}\sqrt{\left(\frac{b}{2}\right)^2 - ac}\right);$$

$$\alpha_2 = \left(-\frac{R}{2L} - \sqrt{\left(\frac{R}{2L}\right)^2 - \frac{1}{LC}}\right) = \left(-\frac{b}{2a} - \frac{1}{a}\sqrt{\left(\frac{b}{2}\right)^2 - ac}\right) \tag{11.6}$$

where, $b = \frac{R}{L}$ *and* $c = \frac{1}{LC}$.

The roots of the characteristic equation (11.5) are classified in three groups depending upon the values of the parameters R, L, and C of the circuit.

Case-A (overdamped response): When $\left(\frac{R}{2L}\right)^2 - \frac{1}{LC} > 0$, this implies that the roots are distinct with negative real parts. Under this situation, the natural or transient part of the complete solution is written as

$$v_{cn}(t) = A_1 e^{\alpha_1 t} + A_2 e^{\alpha_2 t} \tag{11.7}$$

and each term of the above expression decays exponentially and ultimately reduces to zero as $t \to \infty$ and it is termed as overdamped response of input free system. A system that is overdamped responds slowly to any change in excitation. It may be noted that the exponential term $A_1 e^{\alpha_1 t}$ takes longer time to decay its value to zero than the term $A_1 e^{\alpha_2 t}$. One can introduce a factor ξ that provides an information about the speed of system response and it is defined by damping ratio

$$(\xi) = \frac{Actual\ damping}{critical\ damping} = \frac{b}{2\sqrt{ac}} = \frac{R/L}{2/\sqrt{LC}} > 1 \tag{11.8}$$

Case-B (critically damped response): When $\left(\frac{R}{2L}\right)^2 - \frac{1}{LC} = 0$, this implies that the roots of eq.(11.5) are same with negative real parts. Under this situation, the form of the natural or transient part of the complete solution is written as

$$v_{cn}(t) = \left(A_1 t + A_2\right) e^{\alpha t} \quad \text{(where } \alpha = -\frac{R}{2L}\text{)} \tag{11.9}$$

where the natural or transient response is a sum of two terms: a negative exponential and a negative exponential multiplied by a linear term. The expression (11.9) that arises from the natural solution of second order differential equation having the roots of characteristic equation are same value can be verified following the procedure given below.

The roots of this characteristic equation (11.5) are same $\alpha = \alpha_1 = \alpha_2 = \frac{R}{2L}$ when $\left(\frac{R}{2L}\right)^2 - \frac{1}{LC} = 0 \Rightarrow \left(\frac{R}{2L}\right)^2 = \frac{1}{LC}$ and the corresponding homogeneous equation (11.4) can be rewritten as

$$\frac{d^2 v_c(t)}{dt^2} + 2\frac{R}{2L}\frac{dv_c(t)}{dt} + \frac{1}{LC} v_c(t) = 0$$

$$or\ \frac{d^2 v_c(t)}{dt^2} + 2\alpha \frac{dv_c(t)}{dt} + \alpha^2 v_c(t) = 0$$

$$or\ \frac{d}{dt}\left(\frac{dv_c(t)}{dt} + \alpha v_c(t)\right) + \alpha\left(\frac{dv_c(t)}{dt} + \alpha v_c(t)\right) = 0$$

$$or\ \frac{df}{dt} + \alpha f = 0 \quad \text{where } f = \frac{dv_c(t)}{dt} + \alpha v_c(t)$$

The solution of the above first order differential equation is well known and it is given by

$$f = A_1\ e^{\alpha t}$$

Using the value of f in the expression $f = \frac{dv_c(t)}{dt} + \alpha\, v_c(t)$ we can get,

$$\frac{dv_c(t)}{dt} + \alpha\, v_c(t) = A_1\, e^{-\alpha t} \Rightarrow e^{\alpha t}\frac{dv_c(t)}{dt} + e^{\alpha t}\,\alpha\, v_c(t) = A_1 \ \Rightarrow \frac{d}{dt}\left(e^{\alpha t}\, v_c(t)\right) = A_1$$

Integrating the above equation in both sides yields,

$$v_{cn}(t) = \left(A_1 t + A_2\right) e^{\alpha t}$$

In fact, the term $A_2\, e^{\alpha t}$ (with $\alpha = -\frac{R}{2L}$) decays exponentially with the time and tends to zero as $t \to \infty$. On the other hand, the value of the term $A_1 t\, e^{\alpha t}$ (with $\alpha = -\frac{R}{2L}$) in equation (11.9) first increases from its zero value to a maximum value $A_1 \frac{2L}{R} e^{-1}$ at a time $t = -\frac{1}{\alpha} = -\left(-\frac{2L}{R}\right) = \frac{2L}{R}$ and then decays with time, finally reaches to zero. One can easily verify above statements by adopting the concept of maximization problem of a single valued function. The second order system results the speediest response possible without any overshoot while the roots of characteristic equation (11.5) of system having the same negative real parts. The response of such a second order system is defined as a critically damped system's response. In this case damping ratio

$$(\xi) = \frac{Actual\ damping}{critical\ damping} = \frac{b}{2\sqrt{ac}} = \frac{R/L}{2/\sqrt{LC}} = 1 \tag{11.10}$$

Case-C (underdamped response): When $\left(\frac{R}{2L}\right)^2 - \frac{1}{LC} < 0$, this implies that the roots of eq.(11.5) are complex conjugates and they are expressed as $\alpha_1 = \left(-\frac{R}{2L} + j\sqrt{\frac{1}{LC} - \left(\frac{R}{2L}\right)^2}\right) = \beta + j\gamma$; $\alpha_2 = \left(-\frac{R}{2L} - j\sqrt{\frac{1}{LC} - \left(\frac{R}{2L}\right)^2}\right) = \beta - j\gamma$. The form of the natural or transient part of the complete solution is written as

$$\begin{aligned} v_{cn}(t) &= A_1 e^{\alpha_1 t} + A_2\, e^{\alpha_2 t} = A_1 e^{(\beta + j\gamma)} + A_2\, e^{(\beta - j\gamma)} \\ &= e^{\beta t}\left[\left(A_1 + A_2\right)\cos\left(\gamma t\right) + j\left(A_1 - A_2\right)\sin\left(\gamma t\right)\right] \qquad (11.11) \\ &= e^{\beta t}\left[B_1 \cos\left(\gamma t\right) + B_2 \sin\left(\gamma t\right)\right] \text{ where } B_1 = A_1 + A_2 \ ;\ B_2 = j\left(A_1 - A_2\right) \end{aligned}$$

For real system, the response $v_{cn}(t)$ must also be real. This is possible only if A_1 *and* A_2 conjugates. The equation (11.11) further can be simplified in the following form:

$$e^{\beta t}\ K \sin\left(\gamma t + \theta\right) \tag{11.12}$$

where $\beta =$ real part of the root , $\gamma =$ complex part of the root, $K = \sqrt{B_1^2 + B_2^2}$ *and* $\theta = \tan^{-1}\left(\frac{B_1}{B_2}\right)$. Truly speaking the value of K *and* θ can be calculated using the initial conditions of the circuit. The system response exhibits oscillation around the steady state value when the roots of characteristic equation are complex and results an under-damped system's response. This oscillation will die down with time if the roots are with negative real parts. In this case the damping ratio

$$(\xi) = \frac{Actual\ damping}{critical\ damping} = \frac{b}{2\sqrt{ac}} = \frac{R/L}{2/\sqrt{LC}} < 1 \qquad (11.13)$$

Finally, the response of a second order system when excited with a dc voltage source is presented in fig.L.11.2 for different cases, i.e., (i) under-damped (ii) over-damped (iii) critically damped system response.

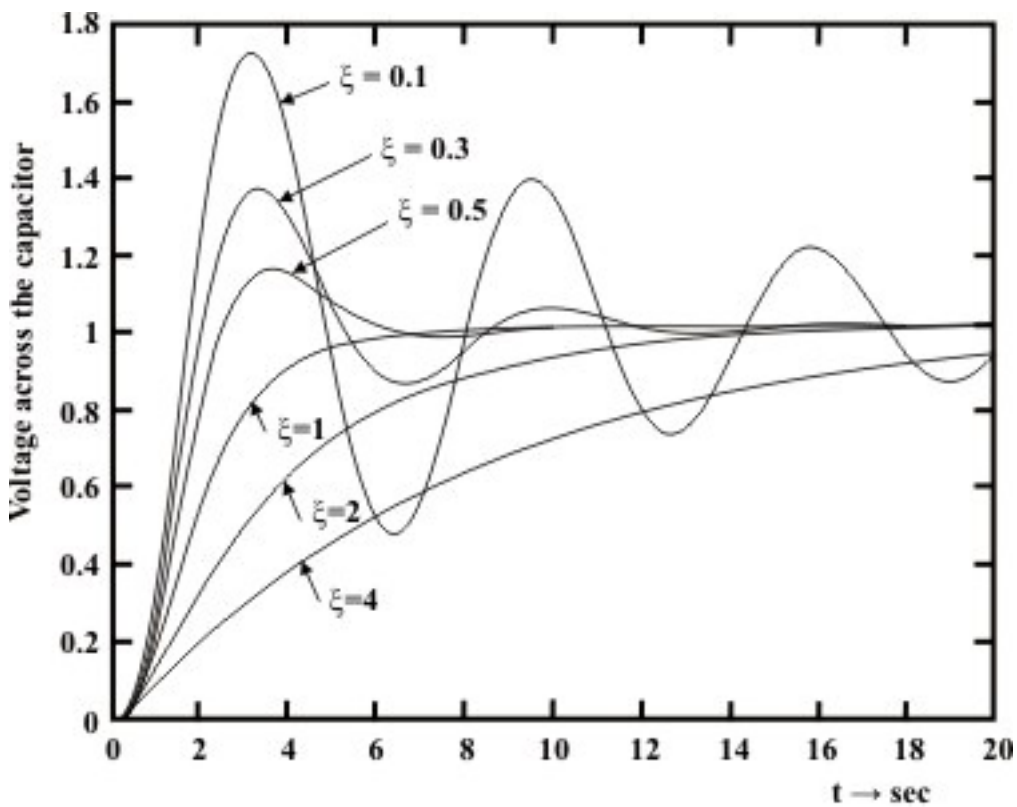

Fig. 11.2: System response for series R-L-C circuit:
(a) underdamped
(b) critically damped
(c) overdamped system

Example: L.11.1 The switch $S1$ was closed for a long time as shown in fig.11.3. Simultaneously at $t=0$, the switch $S1$ is opened and $S2$ is closed Find $(a)\ i_L(0^+);\ (b)\ v_c(0^+);\quad (c)\ i_R(0^+);\quad (d)\, v_L(0^+);\ (e)\ i_c(0^+)\ ;\ (f)\ \dfrac{dv_c(0^+)}{dt}$.

Solution: When the switch $S1$ is kept in position '1' for a sufficiently long time, the circuit reaches to its steady state condition. At time $t=0^-$, the capacitor is completely charged and it acts as a open circuit. On other hand,

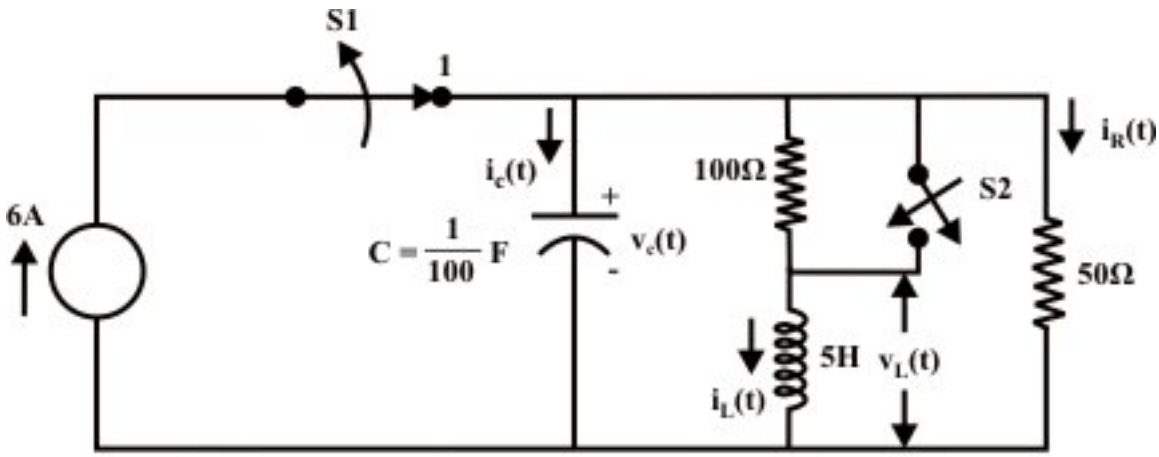

Fig. 11.3

the inductor acts as a short circuit under steady state condition, the current in inductor can be found as

$$i_L(0^-)=\frac{50}{100+50}\times 6=2\,A$$

Using the KCL, one can find the current through the resistor $i_R(0^-)=6-2=4A$ and subsequently the voltage across the capacitor $v_c(0^-)=4\times 50=200\,volt.$

Note at $t=0^+$ not only the current source is removed, but 100Ω resistor is shorted or removed as well. The continuity properties of inductor and capacitor do not permit the current through an inductor or the voltage across the capacitor to change instantaneously. Therefore, at $t=0^+$ the current in inductor, voltage across the capacitor, and the values of other variables at $t=0^+$ can be computed as

$$i_L(0^+)=i_L(0^-)=2\,A;\quad v_c(0^+)=v_c(0^-)=200\,volt.$$

Since the voltage across the capacitor at $t=0^+$ is $200\,volt$, the same voltage will appear across the inductor and the 50Ω resistor. That is, $v_L(0^+)=v_R(0^+)=200\,volt.$ and hence, the current $\left(i_R(0^+)\right)$ in 50Ω resistor = $\dfrac{200}{50}=4\,A$. Applying KCL at the bottom terminal

of the capacitor we obtain $i_c(0^+) = -(4+2) = -6A$ and subsequently, $\frac{dv_c(0^+)}{dt} = \frac{i_c(0^+)}{C} = \frac{-6}{0.01} = -600\ volt./\sec.$

Example: L.11.2 The switch 'S' is closed sufficiently long time and then it is opened at time '$t=0$' as shown in fig.11.4. Determine $(i)\ v_0(0^+)\ \ (ii)\left.\frac{dv_c(t)}{dt}\right|_{t=0^+}\ \ (iii)\ i_L(0^+),\ and\ (iv)\left.\frac{di_L(t)}{dt}\right|_{t=0^+}\ \ (v)\left.\frac{dv_0(t)}{dt}\right|_{t=0^+}$ when $R_1 = R_2 = 3\Omega$.

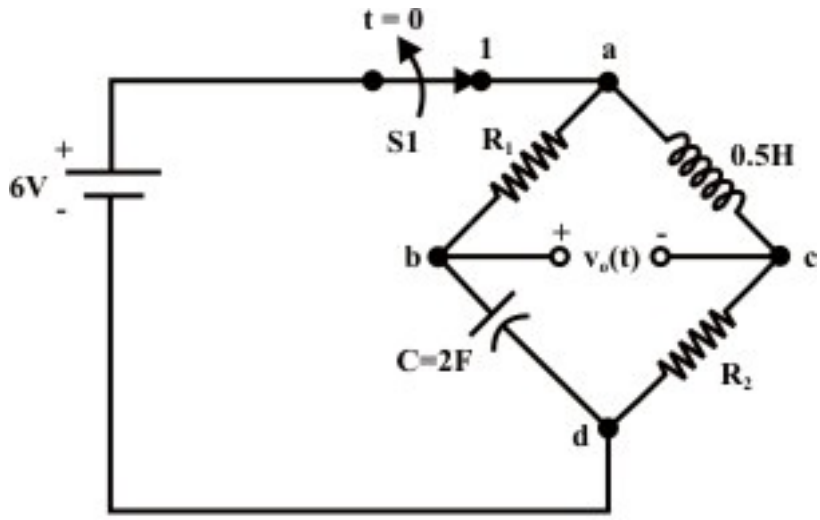

Fig. 11.4

Solution: At $t=0^-$ (just before opening the switch), the capacitor is fully charged and current flowing through it totally blocked i.e., capacitor acts as an open circuit). The voltage across the capacitor is $v_c(0^-) = 6V = v_c(0^+) = v_{bd}(0^+)$ and terminal 'b' is higher potential than terminal 'd'. On the other branch, the inductor acts as a short circuit (i.e., voltage across the inductor is zero) and the source voltage $6V$ will appear across the resistance R_2. Therefore, the current through inductor $i_L(0^-) = \frac{6}{3} = 2A = i_L(0^+)$. Note at $t=0^+$, $v_{ad}(0^+) = 0$ (since the voltage drop across the resistance $R_1 = 3\Omega = v_{ab} = -6V$) and $v_{cd}(0^+) = 6V$ and this implies that $v_{ca}(0^+) = 6V =$ voltage across the inductor (note, terminal 'c' is + ve terminal and inductor acts as a source of energy).

Now, the voltage across the terminals 'b' and 'c' ($v_0(0^+)$) = $v_{bd}(0^+) - v_{cd}(0^+) = 0V$.

The following expressions are valid at $t=0^+$

$C\left.\frac{dv_c}{dt}\right|_{t=0^+} = i_c(0^+) = 2A \Rightarrow \left.\frac{dv_c}{dt}\right|_{t=0^+} = 1\ volt/\sec.$ (note, voltage across the capacitor will

decrease with time i.e., $\left.\frac{dv_c}{dt}\right|_{t=0^+} = -1\ volt/\sec$). We have just calculated the voltage across the inductor at $t=0^+$ as

$$v_{ca}(0^+) = L\left.\frac{di_L(t)}{dt}\right|_{t=0^+} = 6V \Rightarrow \left.\frac{di_L(t)}{dt}\right|_{t=0^+} = \frac{6}{0.5} = 12\,A/\sec.$$

Now, $\frac{dv_0(0^+)}{dt} = \frac{dv_c(0^+)}{dt} - R_2\frac{di_L(0^+)}{dt} = 1-(12\times 3) = -35\,volt/\sec.$

Example: L.11.3 Refer to the circuit in fig.11.5(a). Determine,

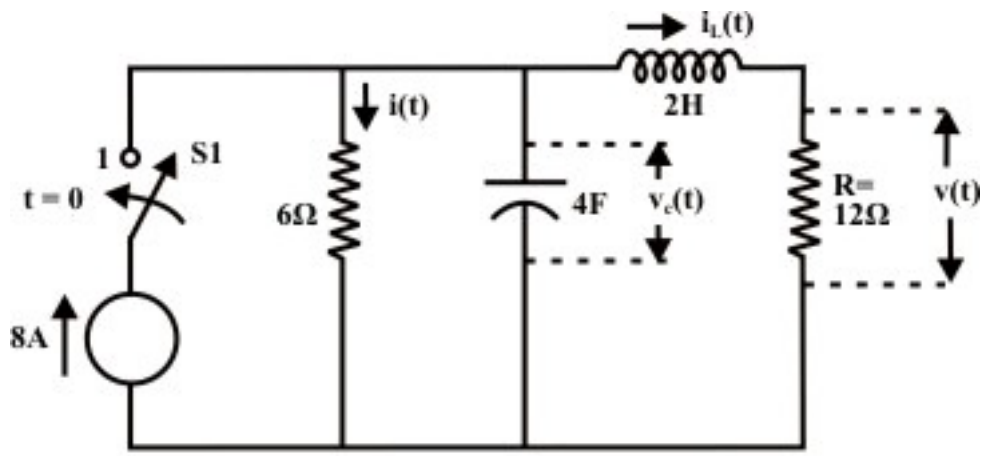

Fig. 11.5(a)

(i) $i(0^+), i_L(0^+)$ *and* $v(0^+)$ (ii) $\frac{di(0^+)}{dt}$ *and* $\frac{dv(0^+)}{dt}$ **(iii)** $i(\infty)$, $i_L(\infty)$ *and* $v(\infty)$ (assumed $v_c(0)=0$; $i_L(0)=0$)

Solution: When the switch was in 'off' position i.e., t < 0

$$i(0^-) = i_L(0^-) = 0,\ v(0^-) = 0 \text{ and } v_C(0^-) = 0$$

The switch '$S1$' was closed in position '1' at time t = 0 and the corresponding circuit is shown in fig 11.5 (b).

(i) From continuity property of inductor and capacitor, we can write the following expression for $t = 0^+$

$$i_L(0^+) = i_L(0^-) = 0,\ v_c(0^+) = v_c(0^-) = 0 \Rightarrow i(0^+) = \frac{1}{6}v_c(0^+) = 0$$

$$v(0^+) = i_L(0^+)\times 6 = 0\text{ volt}.$$

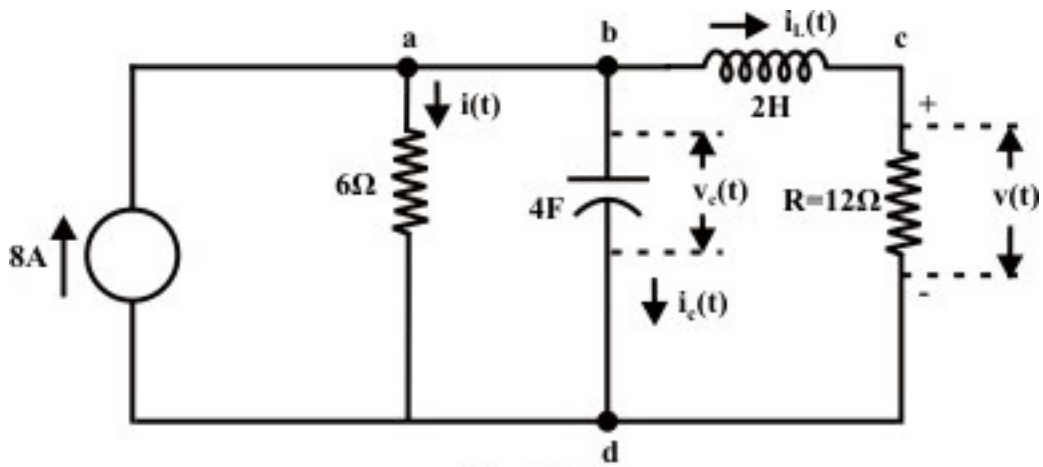

Fig. 11.5(b)

(ii) KCL at point 'a'

$$8 = i(t) + i_c(t) + i_L(t)$$

At $t = 0^+$, the above expression is written as

$$8 = i(0^+) + i_c(0^+) + i_L(0^+) \qquad \Rightarrow i_c(0^+) = 8A$$

We know the current through the capacitor $i_c(t)$ can be expressed as

$$i_c(t) = C\frac{dv_c(t)}{dt}$$

$$i_c(0^+) = C\frac{dv_c(0^+)}{dt}$$

$$\therefore \quad \frac{dv_c(0^+)}{dt} = 8 \times \frac{1}{4} = 2 \text{ volt./sec..}$$

Note the relations

$\frac{dv_c(0^+)}{dt}$ = change in voltage drop in 6Ω resistor = change in current through 6Ω resistor$\times 6$ $= 6 \times \frac{di(0^+)}{dt} \qquad \Rightarrow \frac{di(0^+)}{dt} = \frac{2}{6} = \frac{1}{3}$ $amp./\sec.$

Applying KVL around the closed path 'b-c-d-b', we get the following expression.

$$v_c(t) = v_L(t) + v(t)$$

At, $t = 0^+$ the following expression

$$v_c(0^+) = v_L(0^+) + i_L(0^+) \times 12$$

$$0 = v_L(0^+) + 0 \times 12 \Rightarrow v_L(0^+) = 0 \Rightarrow L\frac{di_L(0^+)}{dt} = 0 \Rightarrow \frac{di_L(0^+)}{dt} = 0$$

$$\frac{di_L(0^+)}{dt} = 0 \text{ and this implies } 12\frac{di_L(0^+)}{dt} = 12 \times 0 = 0 \text{ v/sec} = \frac{dv(0^+)}{dt} = 0$$

Now, $v(t) = R\,i_L(t)$ *also* at $t = 0^+$

$$\frac{dv(0^+)}{dt} = R\frac{di_L(0^+)}{dt} = 12\,\frac{di_L(0^+)}{dt} = 0\ volt/\sec.$$

(iii) At $t = \alpha$, the circuit reached its steady state value, the capacitor will block the flow of dc current and the inductor will act as a short circuit. The current through 6Ω and 12 Ω resistors can be formed as

$$\mathrm{i}(\infty) = \frac{12\times 8}{18} = \frac{16}{3} = 5.333\mathrm{A},\quad \mathrm{i_L}(\infty) = 8 - 5.333 = 2.667\,\mathrm{A}$$

$$v_c(\infty) = 32\ volt.$$

Example: L.11.4 The switch $S1$ has been closed for a sufficiently long time and then it is opened at $t=0$ (see fig.11.6(a)). Find the expression for (a) $v_c(t)$, (b) $i_c(t)$, $t>0$ for inductor values of $(i)\,L=0.5H$ $(ii)\ L=0.2H$ $(iii)\ L=1.0H$ and plot $v_c(t)-vs-t$ and $i(t)-vs-t$ for each case.

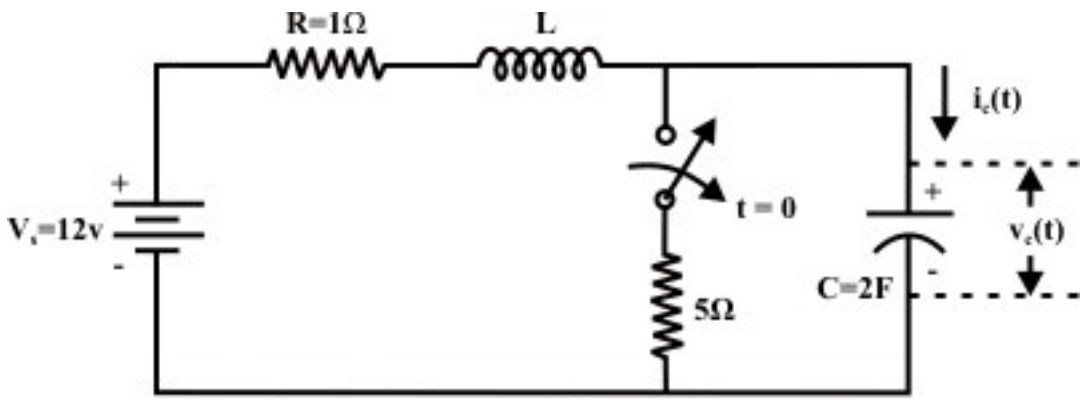

Fig. 11.6(a)

Solution: At $t=0^-$ (before the switch is opened) the capacitor acts as an open circuit or block the current through it but the inductor acts as short circuit. Using the properties of inductor and capacitor, one can find the current in inductor at time $t=0^+$ as

$i_L(0^+) = i_L(0^-) = \dfrac{12}{1+5} = 2A$ (note inductor acts as a short circuit) and voltage across the 5Ω resistor = $2\times 5 = 10\,volt$. The capacitor is fully charged with the voltage across the 5Ω resistor and the capacitor voltage at $t=0^+$ is given by

$v_c(0^+) = v_c(0^-) = 10\,volt$. The circuit is opened at time $t=0$ and the corresponding circuit diagram is shown in fig. 11.6(b).

Case-1: $L=0.5H$, $R=1\Omega$ *and* $C=2F$

Let us assume the current flowing through the circuit is $i(t)$ and apply KVL equation around the closed path is

$$V_s = R\,i(t) + L\frac{di(t)}{dt} + v_c(t) \Rightarrow V_s = RC\frac{dv_c(t)}{dt} + LC\frac{d^2v_c(t)}{dt^2} + v_c(t) \text{ (note, } i(t) = C\frac{dv_c(t)}{dt}\text{)}$$

$$V_s = \frac{d^2v_c(t)}{dt^2} + \frac{R}{L}\frac{dv_c(t)}{dt} + + \frac{1}{LC}v_c(t) \tag{11.14}$$

The solution of the above differential equation is given by

$$v_c(t) = v_{cn}(t) + v_{cf}(t) \tag{11.15}$$

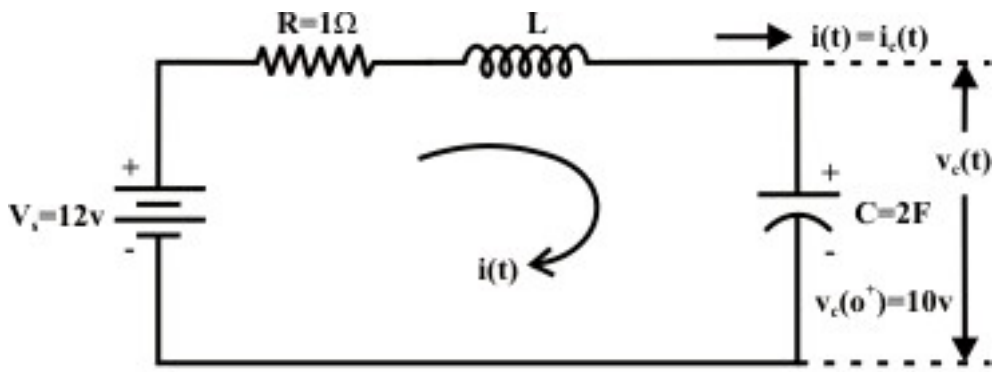

Fig. 11.6(b)

The solution of natural or transient response $v_{cn}(t)$ is obtained from the force free equation or homogeneous equation which is

$$\frac{d^2v_c(t)}{dt^2} + \frac{R}{L}\frac{dv_c(t)}{dt} + \frac{1}{LC}v_c(t) = 0 \tag{11.16}$$

The characteristic equation of the above homogeneous equation is written as

$$\alpha^2 + \frac{R}{L}\alpha + \frac{1}{LC} = 0 \tag{11.17}$$

The roots of the characteristic equation are given as

$$\alpha_1 = \left(-\frac{R}{2L} + \sqrt{\left(\frac{R}{2L}\right)^2 - \frac{1}{LC}}\right) = -1.0; \quad \alpha_2 = \left(-\frac{R}{2L} - \sqrt{\left(\frac{R}{2L}\right)^2 - \frac{1}{LC}}\right) = -1.0$$

and the roots are equal with negative real sign. The expression for natural response is given by

$$v_{cn}(t) = \left(A_1 t + A_2\right)e^{\alpha t} \quad \text{(where } \alpha = \alpha_1 = \alpha_2 = -1\text{)} \tag{11.18}$$

The forced or the steady state response $v_{cf}(t)$ is the form of applied input voltage and it is constant 'A'. Now the final expression for $v_c(t)$ is

$$v_c(t) = \left(A_1 t + A_2\right)e^{\alpha t} + A = \left(A_1 t + A_2\right)e^{-t} + A \tag{11.19}$$

The initial and final conditions needed to evaluate the constants are based on $v_c(0^+) = v_c(0^-) = 10\,volt;\ i_L(0^+) = i_L(0^-) = 2\,A$ (Continuity property).

At $t=0^+$;

$$v_c(t)\big|_{t=0^+} = A_2\, e^{-1\times 0} + A = A_2 + A \quad \Rightarrow\ A_2 + A = 10 \tag{11.20}$$

Forming $\dfrac{dv_c(t)}{dt}$ (from eq.(11.19)as

$$\frac{dv_c(t)}{dt} = \alpha\left(A_1 t + A_2\right)e^{\alpha t} + A_1\, e^{\alpha t} = -\left(A_1 t + A_2\right)e^{-t} + A_1\, e^{-t}$$

$$\left.\frac{dv_c(t)}{dt}\right|_{t=0^+} = A_1 - A_2 \Rightarrow A_1 - A_2 = 1 \tag{11.21}$$

(note, $C\dfrac{dv_c(0^+)}{dt} = i_c(0^+) = i_L(0^+) = 2 \Rightarrow \dfrac{dv_c(0^+)}{dt} = 1\,volt/\sec.$)

It may be seen that the capacitor is fully charged with the applied voltage when $t=\infty$ and the capacitor blocks the current flowing through it. Using $t=\infty$ in equation (11.19) we get,

$v_c(\infty) = A \Rightarrow A = 12$

Using the value of A in equation (11.20) and then solving (11.20) and (11.21) we get, $A_1 = -1;\ A_2 = -2$.

The total solution is

$$v_c(t) = -\left(t+2\right)e^{-t} + 12 = 12 - \left(t+2\right)e^{-t};$$

$$i(t) = C\frac{dv_c(t)}{dt} = 2\times\left[\left(t+2\right)e^{-t} - e^{-t}\right] = 2\times\left(t+1\right)e^{-t} \tag{11.22}$$

The circuit responses (critically damped) for $L = 0.5\,H$ are shown fig.11.6 (c) and fig.11.6(d).

Case-2: $L = 0.2\,H, R = 1\Omega\ and\ C = 2F$

It can be noted that the initial and final conditions of the circuit are all same as in case-1 but the transient or natural response will differ. In this case the roots of characteristic equation are computed using equation (11.17), the values of roots are

$\alpha_1 = -0.563;\ \alpha_2 = -4.436$

The total response becomes

$$v_c(t) = A_1 e^{\alpha_1 t} + A_2\, e^{\alpha_2 t} + A = A_1 e^{-4.436t} + A_2\, e^{-0.563t} + A \tag{11.23}$$

$$\frac{dv_c(t)}{dt} = \alpha_1\, A_1\, e^{\alpha_1 t} + \alpha_2 A_2\, e^{\alpha_2 t} = -4.435\, A_1\, e^{-4.436t} - 0.563\, A_2\, e^{-0.536t} \tag{11.24}$$

Using the initial conditions($v_c(0^+) = 10$, $\dfrac{dv_c(0^+)}{dt} = 1\,volt/\sec.$) that obtained in case-1 are used in equations (11.23)-(11.24) with $A = 12$ (final steady state condition) and simultaneous solution gives

$A_1 = 0.032;\ A_2 = -2.032$

The total response is

$$v_c(t) = 0.032\,e^{-4.436t} - 2.032\,e^{-0.563t} + 12$$

$$i(t) = C\frac{dv_c(t)}{dt} = 2\left[1.14\,e^{-0.563t} - 0.14\,e^{-4.436t}\right] \tag{11.25}$$

The system responses (overdamped) for $L = 0.2\,H$ are presented in fig.11.6(c) and fig.11.6 (d).

Case-3: $L = 8.0\,H, R = 1\Omega$ *and* $C = 2F$

Again the initial and final conditions will remain same and the natural response of the circuit will be decided by the roots of the characteristic equation and they are obtained from (11.17) as

$\alpha_1 = \beta + j\gamma = -0.063 + j\,0.243;\ \alpha_2 = \beta - j\gamma = -0.063 - j\,0.242$

The expression for the total response is

$$v_c(t) = v_{cn}(t) + v_{cf}(t) = e^{\beta t}\,K\sin\left(\gamma t + \theta\right) + A \tag{11.26}$$

(note, the natural response $v_{cn}(t) = e^{\beta t}\,K\sin\left(\gamma t + \theta\right)$ is written from eq.(11.12) when roots are complex conjugates and detail derivation is given there.)

$$\frac{dv_c(t)}{dt} = K\,e^{\beta t}\left[\beta\sin\left(\gamma t + \theta\right) + \gamma\cos\left(\gamma t + \theta\right)\right] \tag{11.27}$$

Again the initial conditions ($v_c(0^+) = 10$, $\frac{dv_c(0^+)}{dt} = 1\,volt/\sec.$) that obtained in case-1 are used in equations (11.26)-(11.27) with $A = 12$ (final steady state condition) and simultaneous solution gives

$K = 4.13;\ \theta = -28.98^0\left(\deg ree\right)$

The total response is

$$v_c(t) = e^{\beta t}\,K\sin\left(\gamma t + \theta\right) + 12 = e^{-0.063t}\,4.13\sin\left(0.242t - 28.99^0\right) + 12$$

$$v_c(t) = 12 + 4.13\,e^{-0.063t}\,\sin\left(0.242t - 28.99^0\right) \tag{11.28}$$

$$i(t) = C\frac{dv_c(t)}{dt} = 2e^{-0.063t}\left[0.999 * \cos\left(0.242t - 28.99^0\right) - 0.26\sin\left(0.242t - 28.99^0\right)\right]$$

The system responses (under-damped) for $L = 8.0\,H$ are presented in fig.11.6(c) and fig. 11.6(d).

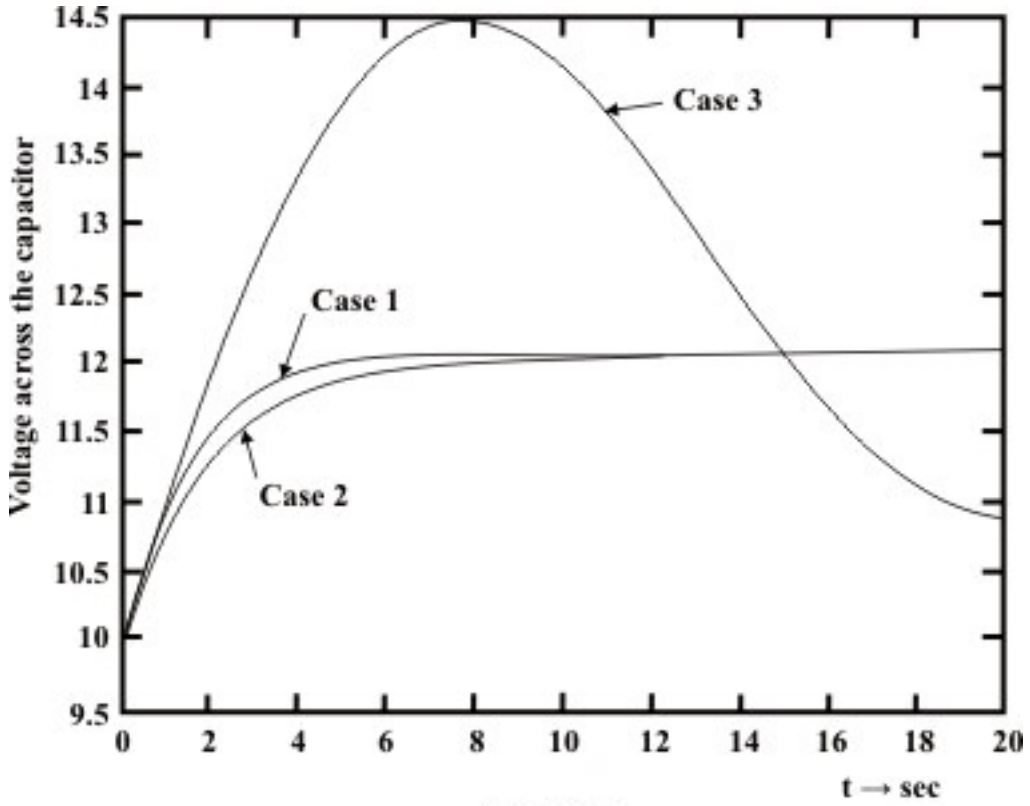

Fig. 11.6(c)

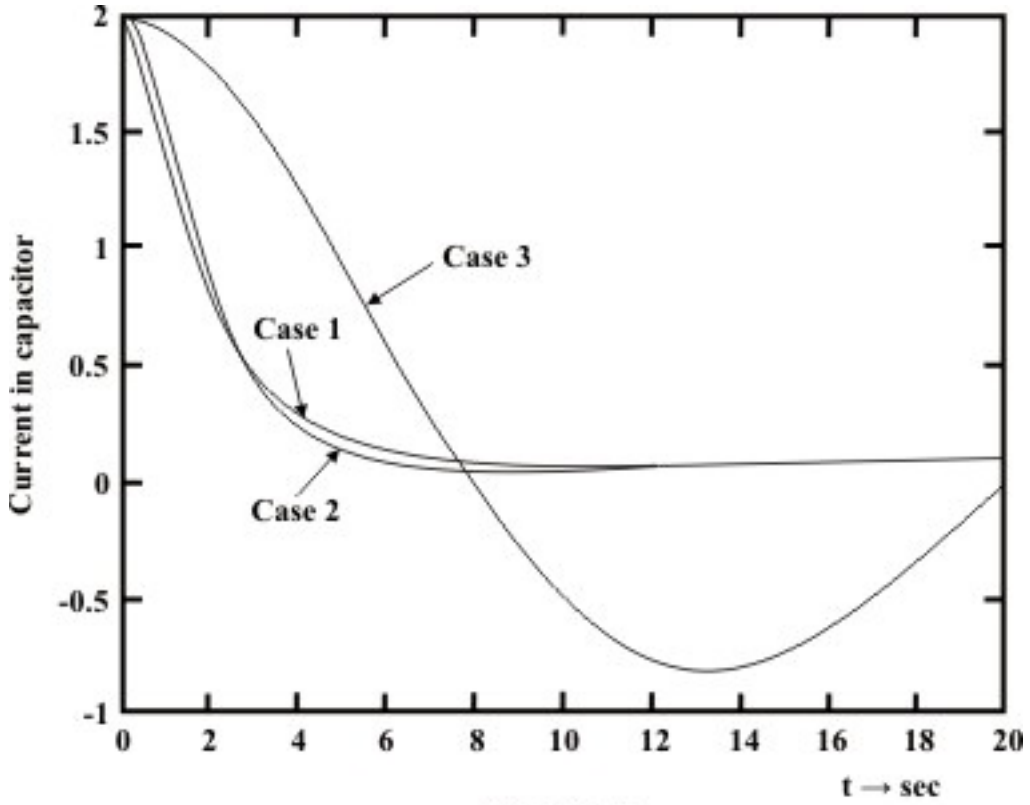

Fig. 11.6(d)

Remark: One can use $t = 0$ *and* $t = \infty$ in eq. 11.22 or eq. 11.25 or eq. 11.28 to verify whether it satisfies the initial and final conditions (i.e., initial capacitor voltage $v_c(0^+) = 10\,volt.$, and the steady state capacitor voltage $v_c(\infty) = 12\,volt.$) of the circuit.

Example: L.11.5 The switch '$S1$' in the circuit of Fig. 11.7(a) was closed in position '1' sufficiently long time and then kept in position '2'. Find (i) $v_c(t)$ (ii) $i_c(t)$ for t ≥ 0 if C is (a) $\frac{1}{9}F$ (b) $\frac{1}{4}F$ (c) $\frac{1}{8}F$.

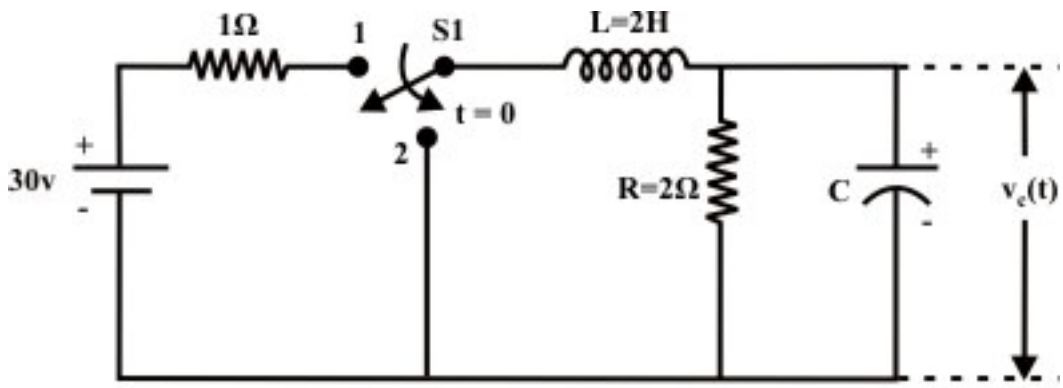

Fig. 11.7(a)

Solution: When the switch was in position '1', the steady state current in inductor is given by

$$i_L(0^-) = \frac{30}{1+2} = 10\text{A}, \quad v_c(0^-) = i_L(0^-)R = 10 \times 2 = 20 \text{ volt.}$$

Using the continuity property of inductor and capacitor we get

$$i_L(0^+) = i_L(0^-) = 10, \quad v_c(0^+) = v_c(0^-) = 20 \text{ volt.}$$

The switch '$S1$' is kept in position '2' and corresponding circuit diagram is shown in Fig.11.7 (b)

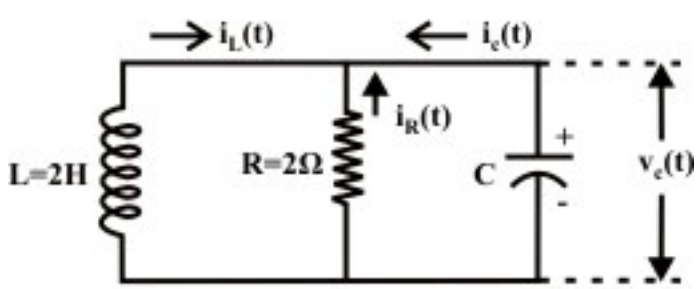

Fig. 11.7(b)

Applying KCL at the top junction point we get,

$$\frac{v_c(t)}{R} + i_c(t) + i_L(t) = 0$$

$$\frac{v_c(t)}{R} + C\frac{dv_c(t)}{dt} + i_L(t) = 0$$

$$\frac{L}{R}\frac{di_L(t)}{dt} + C.L\frac{d^2 i_L(t)}{dt^2} + i_L(t) = 0 \quad [\text{note: } v_c(t) = L\frac{di_L(t)}{dt}]$$

or $$\frac{d^2 i_L(t)}{dt^2} + \frac{1}{RC}\frac{di_L(t)}{dt} + \frac{1}{LC}i_L(t) = 0 \qquad (11.29)$$

The roots of the characteristics equation of the above homogeneous equation can obtained for $C = \frac{1}{9}\ F$

$$\alpha_1 = \frac{-\frac{1}{RC} + \sqrt{\left(\frac{1}{RC}\right)^2 - 4/LC}}{2} = \frac{-\frac{9}{2} + \sqrt{\left(\frac{9}{2}\right)^2 - \frac{4\times 9}{2}}}{2} = -1.5$$

$$\alpha_2 = \frac{-\frac{1}{RC} - \sqrt{\left(\frac{1}{RC}\right)^2 - 4/LC}}{2} = \frac{-\frac{9}{2} - \sqrt{\left(\frac{9}{2}\right)^2 - \frac{4\times 9}{2}}}{2} = -3.0$$

Case-1$\left(\xi = 1.06,\ \textit{over damped system}\right)$**:** $C = \frac{1}{9}F$, the values of roots of characteristic equation are given as

$\alpha_1 = -1.5$, $\alpha_2 = -3.0$

The transient or neutral solution of the homogeneous equation is given by

$$i_L(t) = A_1 e^{-1.5t} + A_2 e^{-3.0t} \qquad (11.30)$$

To determine A_1 and A_2, the following initial conditions are used.

At $t = 0^+$;

$$i_L(0^+) = i_L(0^-) = A_1 + A_2$$
$$10 = A_1 + A_2 \qquad (11.31)$$

$$v_c(0^+) = v_c(0^-) = v_L(0^+) = L\left.\frac{di_L(t)}{dt}\right|_{t=0^+}$$

$$20 = 2\times\left[A_1 \times -1.5\, e^{-1.5t} - 3.0\times A_2 e^{-3.0t}\right] \qquad (11.32)$$
$$= 2\left[-1.5A_1 - 3A_2\right] = -3A_1 - 6A_2$$

Solving equations (11.31) and (11,32) we get , $A_2 = -16.66$, $A_1 = 26.666$.

The natural response of the circuit is

$$i_L = \frac{80}{3}e^{-1.5t} - \frac{50}{3}e^{-3.0t} = 26.66e^{-1.5t} - 16.66e^{-3.0t}$$

$$L\frac{di_L}{dt} = 2\left[26.66\times -1.5e^{-1.5t} - 16.66\times -3.0\,e^{-3.0t}\right]$$

$$v_L(t) = v_c(t) = \left[100\,e^{-3.0t} - 80\,e^{-1.5t}\right]$$

$$i_c(t) = c\frac{dv_c(t)}{dt} = \frac{1}{9}\left(-300.0\,e^{-3.0t} + 120\,e^{-1.5t}\right) = \left(13.33\,e^{-1.5t} - 33.33\,e^{-3.0t}\right)$$

Case-2 $\left(\xi = 0.707, under\ \ damped\ \ system\right)$**:** For $C = \frac{1}{4}F$, the roots of the characteristic equation are

$$\alpha_1 = -1.0 + j1.0 = \beta + j\gamma$$

$$\alpha_2 = -1.0 - j1.0 = \beta - j\gamma$$

The natural response becomes 1

$$i_L(t) = k\,e^{\beta t}\sin(\gamma t + \theta) \tag{11.33}$$

Where k and θ are the constants to be evaluated from initial condition.

At $t = 0^+$, from the expression (11.33) we get,

$$i_L\left(0^+\right) = k\sin\theta$$

$$10 = k\sin\theta \tag{11.34}$$

$$L\frac{di(t)}{dt}\bigg|_{t=0^+} = 2\times k\left[\beta\,e^{\beta t}\sin(\gamma t + \theta) + e^{\beta t}\gamma\cos(\gamma t + \theta)\right]\Big|_{t=0^+} \tag{11.35}$$

Using equation (11.34) and the values of β *and* γ in equation (11.35) we get,

$$20 = 2k(\beta sn\theta + \gamma\cos\theta) = k\cos\theta \quad (\text{note: } \beta = -1,\ \gamma = 1\ \ and\ \ k\sin\theta = 10) \tag{11.36}$$

From equation (11.34) and (11.36) we obtain the values of θ and k as

$$\tan\theta = \frac{1}{2} \Rightarrow \theta = \tan^{-1}\left(\frac{1}{2}\right) = 26.56^{o} \text{ and } k = \frac{10}{\sin\theta} = 22.36$$

$\therefore$ The natural or transient solution is

$$i_L(t) = 22.36\,e^{-t}\sin\left(t + 26.56^{o}\right)$$

$$L\frac{di(t)}{dt} = v_c(t) = 2\times k\times\left[\beta\sin(\gamma t + \theta) + \gamma\cos(\gamma t + \theta)\right]e^{\beta t}$$

$$= 44.72\left[\cos(t + 26.56^{o}) - \sin(t + 26.56^{o})\right]\times e^{-t}$$

$$i_c(t) = c\frac{dv_c(t)}{dt} = \frac{1}{4}\times 44.72\frac{d}{dt}\left\{\left[\cos(t + 26.56^{o}) - \sin(t + 26.56^{o})\right]e^{-t}\right.$$

$$= -22.36\cos(t + 26.56)\,e^{-t}$$

Case-3 $\left(\xi = 1, \textit{critically damped system}\right)$**:** For $C = \frac{1}{8}F$; the roots of characteristic equation are $\alpha_1 = -2$; $\alpha_2 = -2$ respectively. The natural solution is given by

$$i_L(t) = \left(A_1 t + A_2\right)e^{\alpha t} \tag{11.37}$$

where constants are computed using initial conditions.

At $t = 0^+$; from equation (11.37) one can write

$$i_L(0^+) = A_2 \;\Rightarrow\; A_2 = 10$$

$$L\left.\frac{di(t)}{dt}\right|_{t=0^+} = 2\times\left[A_2\,\alpha\, e^{\alpha t} + \alpha A_1\, t\, e^{\alpha t} + A_1\, e^{\alpha t}\right]_{t=0^+}$$

$$= 2\times\left[\left(A_1 + A_2\alpha\right)e^{\alpha t} + \alpha A_1\, t\, e^{\alpha t}\right]_{t=0^+}$$

$$L\left.\frac{di(t)}{dt}\right|_{t=0^+} = v_c(0^+) = 20 = 2\left(A_1 - 2A_2\right) \;\Rightarrow\; A_1 = 30$$

The natural response is then

$$i_L(t) = \left(10 + 30t\right)e^{-2t}$$

$$L\frac{di_L(t)}{dt} = 2\times\frac{d}{dt}\left[\left(10 + 30t\right)e^{-2t}\right]$$

$$L\frac{di_L(t)}{dt} = v_c(t) = 2\left[10 - 60t\right]e^{-2t}$$

$$i_c(t) = c\frac{dv_c(t)}{dt} = \frac{1}{8}\times 2\times\frac{d}{dt}\left[\left(10 - 60t\right)e^{-2t}\right] = \left[-20e^{-2t} + 30t\,e^{-2t}\right]$$

Case-4 $\left(\xi = 2, \textit{over damped system}\right)$: For $C = \frac{1}{32}F$

Following the procedure as given in case-1 one can obtain the expressions for (i) current in inductor $i_L(t)$ (ii) voltage across the capacitor $v_c(t)$

$$i_L(t) = 11.5e^{-1.08t} - 1.5e^{-14.93t}$$

$$L\frac{di(t)}{dt} = v_c(t) = \left[44.8\, e^{-14.93t} - 24.8\, e^{-1.08t}\right]$$

$$i_c(t) = c\frac{dv_c(t)}{dt} = \frac{1}{32}\times\frac{d}{dt}\left[44.8\, e^{-14.93t} - 24.8\, e^{-1.08t}\right]$$

$$= 0.837e^{-1.08t} - 20.902e^{-14.93t}$$

L.11.3 Test your understanding

(Marks: 80)

T.11.1 Transient response of a second-order ---------- dc network is the sum of two real exponentials. [1]

T.11.2 The complete response of a second order network excited from dc sources is the sum of -------- response and ---------- response. [2]

T.11.3 Circuits containing two different classes of energy storage elements can be described by a ---------- order differential equations. [1]

T.11.4 For the circuit in fig.11.8, find the following [6]

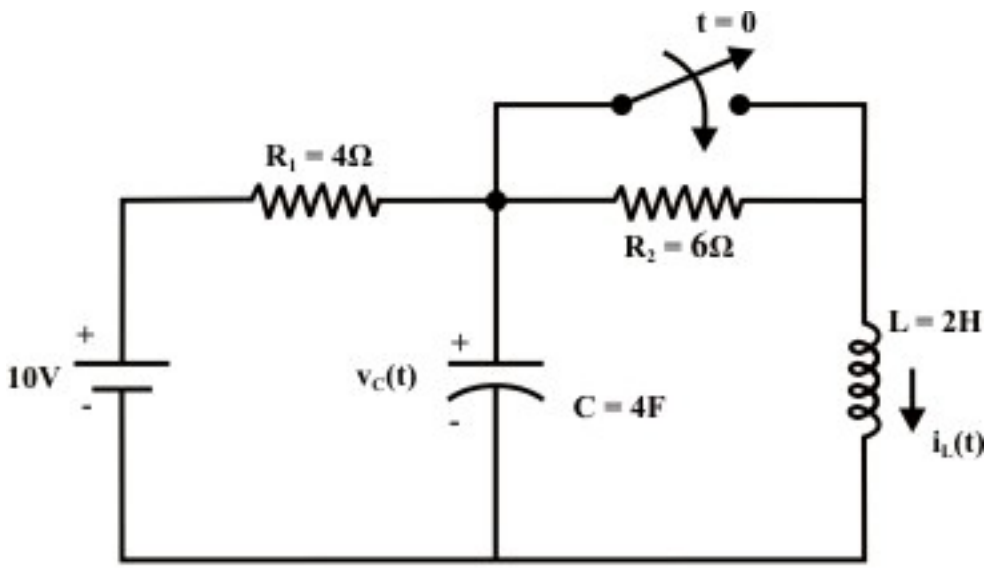

Fig. 11.8

$(a)\ v_c(0^-)\ \ (b)\ v_c(0^+)\ \ (c)\ \dfrac{dv_c(0^-)}{dt}\ \ (d)\ \dfrac{dv_c(0^+)}{dt}\ \ (e)\dfrac{di_L(0^-)}{dt}\ \ (f)\ \dfrac{di_L(0^+)}{dt}$

(Ans. (a) 6 $volt$. (b) 6 $volt$. (c) 0 $V/\sec$. (d) 0 $V/\sec$. (e) 0 $amp/\sec$. (f) 3 $amp./\sec$.)

T.11.5 In the circuit of Fig. 11.9,

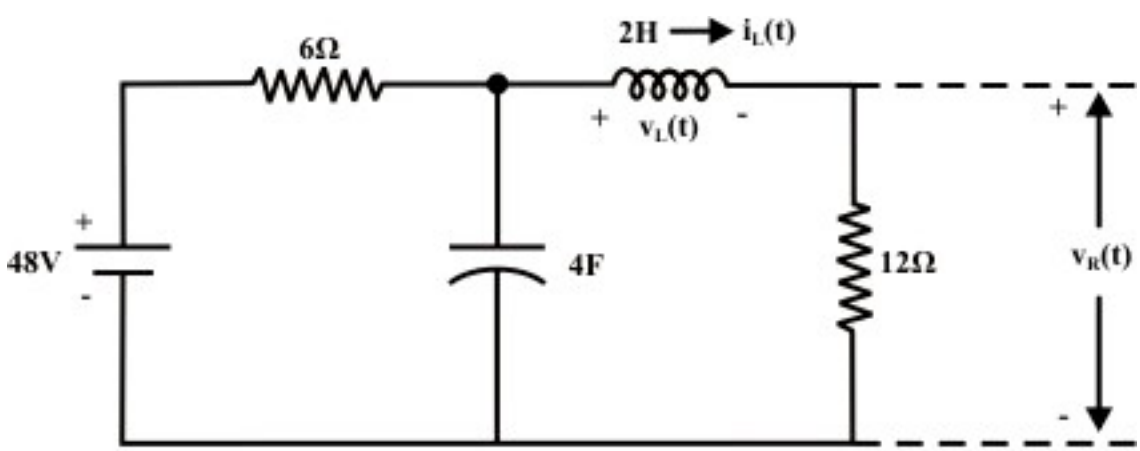

Fig. 11.9

Find,

$(a)\ v_R(0^+)\ and\ v_L(0^+)\ \ (b)\ \dfrac{dv_R(0^+)}{dt}\ \ and\ \dfrac{dv_L(0^+)}{dt}\ \ (c)\ v_R(\infty)\ \ and\ v_L(\infty)$ [8]

(Assume the capacitor is initially uncharged and current through inductor is zero).
(Ans. $(a)\ 0V,\ 0V\ \ (b)\ 0V,\ \ 2Volt./Sec.\ (c)\ 32V,\ 0V$)

T.11.6 For the circuit shown in fig.11.10, the expression for current through inductor

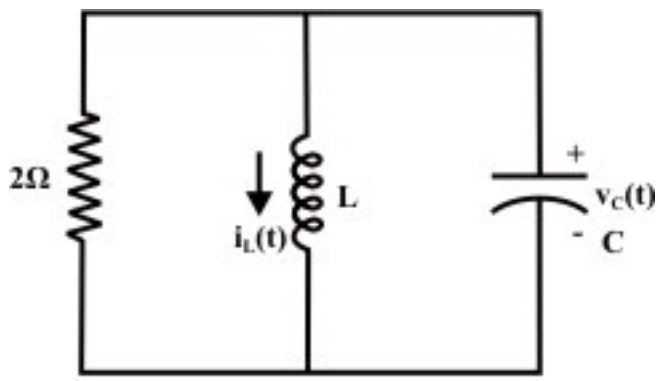

Fig. 11.10

is given by $i_L(t) = (10+30t)e^{-2t}\quad for\quad t \geq 0$

Find, (a) the values of L, C (b) initial condition $v_c(0^-)$ (c) the expression for $v_c(t) > 0$.

(Ans. $(a)\ L = 2H,\ C = \frac{1}{8}F\ \ (b)\ v_c(0^-) = 20V\ \ (c)\ v_c(t) = (20-120t)e^{-2t}V.$) [8]

T.11.7 The response of a series RLC circuit are given by

$$v_c(t) = 12 + 0.032e^{-4.436t} - 2.032e^{-0.563t}$$
$$i_L(t) = 2.28e^{-0.563t} - 0.28e^{-4.436t}$$

where $v_c(t)$ and $i_L(t)$ are capacitor voltage and inductor current respectively. Determine (a) the supply voltage (b) the values $R,\ L,\ C$ of the series circuit. [4+4]

(Ans. $(a)\ 12V\ \ (b)\ R = 1\Omega, L = 0.2H\ \ and\ \ C = 2F$)

T.11.8 For the circuit shown in Fig. 11.11, the switch 'S'was in position '1' for a long time and then at $t = 0$ it is kept in position '2'.

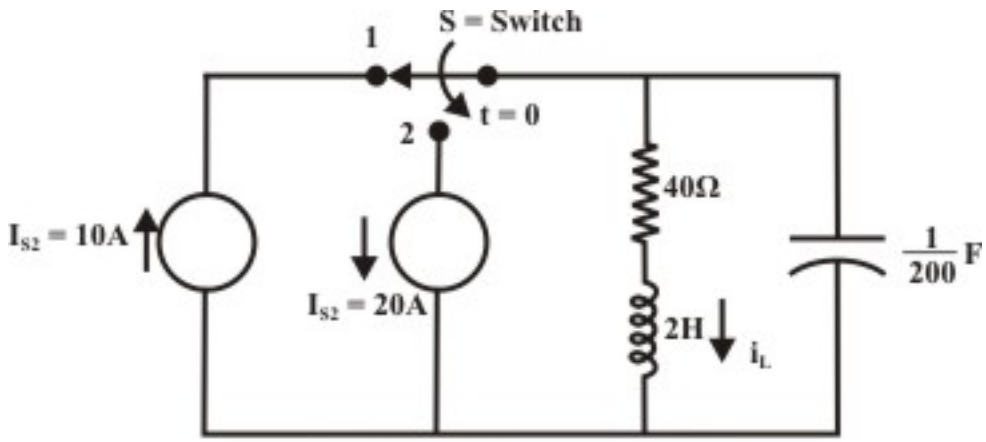

Fig. 11.11

Find,

$(a)\ i_L(0^-);\ (b)\ v_c(0^+);\ (c)\ v_R(0^+);\ (d)\ i_L(\infty);$ [8]

Ans.

$(a)\ i_L(0^-) = 10\,A$; $(b)\ v_c(0^+) = 400V$;

$(c)\ v_R(0^+) = 400V \quad (d)\ i_L(\infty) = -20\,A$

T.11.9 For the circuit shown in Fig.11.12, the switch 'S' has been in position '1' for a long time and at $t = 0$ it is instantaneously moved to position '2'.

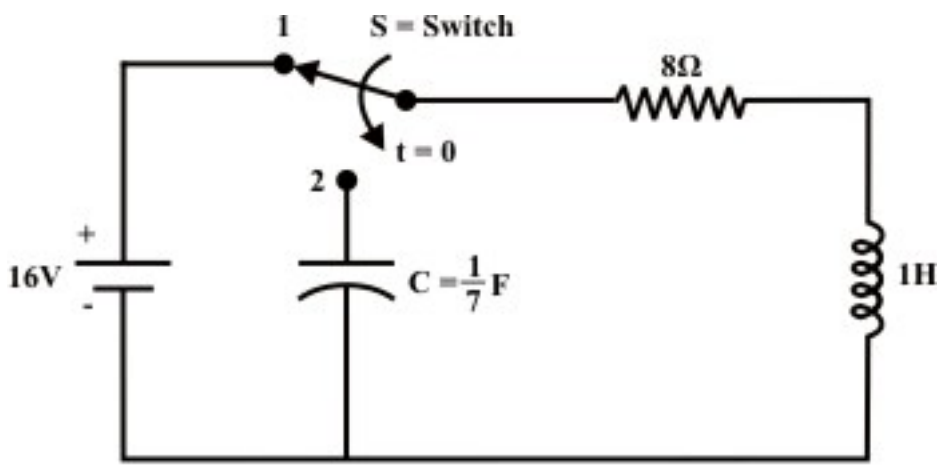

Fig. 11.12

Determine $i(t)$ *for* $t \geq 0$ and sketch its waveform. Remarks on the system's response. [8]

(Ans. $i(t) = \left(\frac{7}{3}e^{-7t} - \frac{1}{3}e^{-t}\right) amps.$)

T.11.10 The switch 'S' in the circuit of Fig.11.13 is opened at $t = 0$ having been closed for a long time.

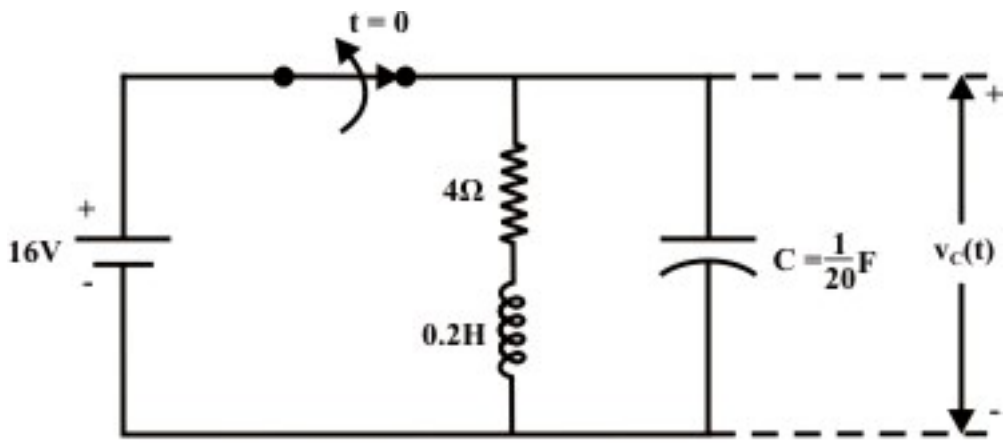

Fig. 11.13

Determine (i) $v_c(t)$ *for* $t \geq 0$ (ii) how long must the switch remain open for the voltage $v_c(t)$ to be less than 10% ot its value at $t = 0$? [10]

(Ans. (i) $(i)\ v_c(t) = (16 + 240t)e^{-10t}$ (ii) 0.705 sec.)

T.11.11 For the circuit shown in Fig.11.14, find the capacitor voltage $v_c(t)$ and inductor current $i_L(t)$ for all t $(t < 0$ *and* $t \geq 0)$. [10]

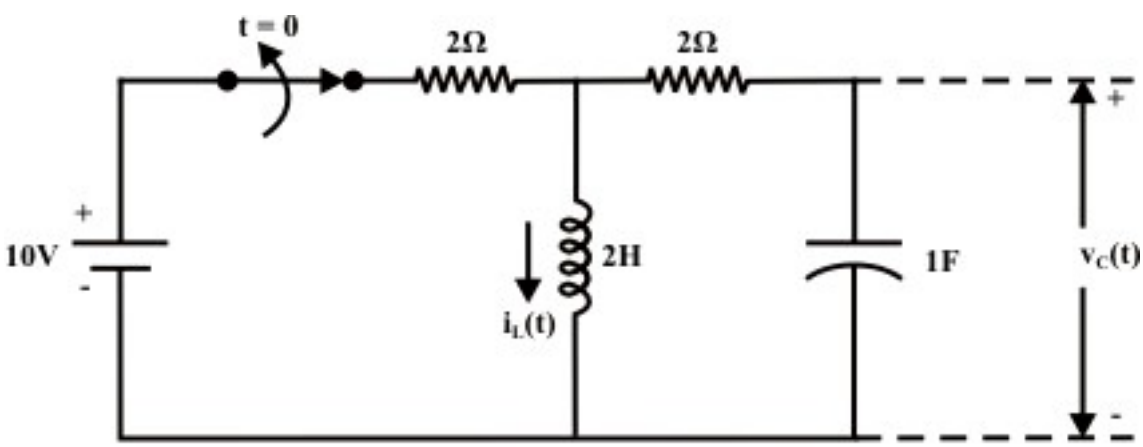

Fig. 11.14

Plot the wave forms $v_c(t)$ and $i_L(t)$ for $t \geq 0$.
(Ans. $v_{c(t)} = 10e^{-0.5t}\sin(0.5t)$; $i_L(t) = 5\left(\cos(0.5t) - \sin(0.5t)\right)e^{-0.5t}$)

T.11.12 For the parallel circuit RLC shown in Fig.11.15, Find the response

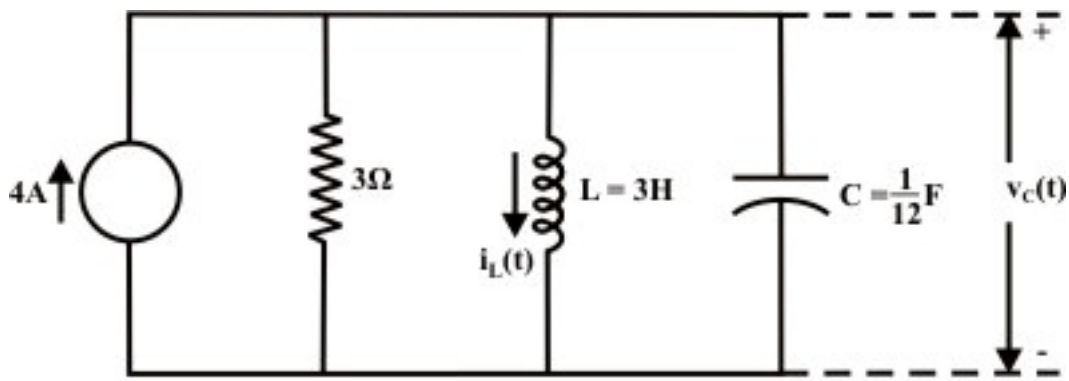

Fig. 11.15

of $i_L(t)$ *and* $v_c(t)$ respectively. [10]

(Ans. $i_L(t) = \left[4 - 4e^{-2t}\left(1 + 2t\right)\right]$ *amps.* ; $v_c(t) = 48\,t\,e^{-2t}$ *volt.*)

Module 4

Single-phase AC Circuits

Lesson 12

Generation of Sinusoidal Voltage Waveform (AC) and Some Fundamental Concepts

In this lesson, firstly, how a sinusoidal waveform (ac) is generated, is described, and then the terms, such as average and effective (rms) values, related to periodic voltage or current waveforms, are explained. Lastly, some examples to find average and root mean square (rms) values of some periodic waveforms are presented.

Keywords: Sinusoidal waveforms, Generation, Average and RMS values of Waveforms.

After going through this lesson, the students will be able to answer the following questions:

1. What is an ac voltage waveform?
2. How a sinusoidal voltage waveform is generated, with some detail?
3. For periodic voltage or current waveforms, to compute or obtain the average and rms values, and also the time period.
4. To compare the different periodic waveforms, using above values.

Generation of Sinusoidal (AC) Voltage Waveform

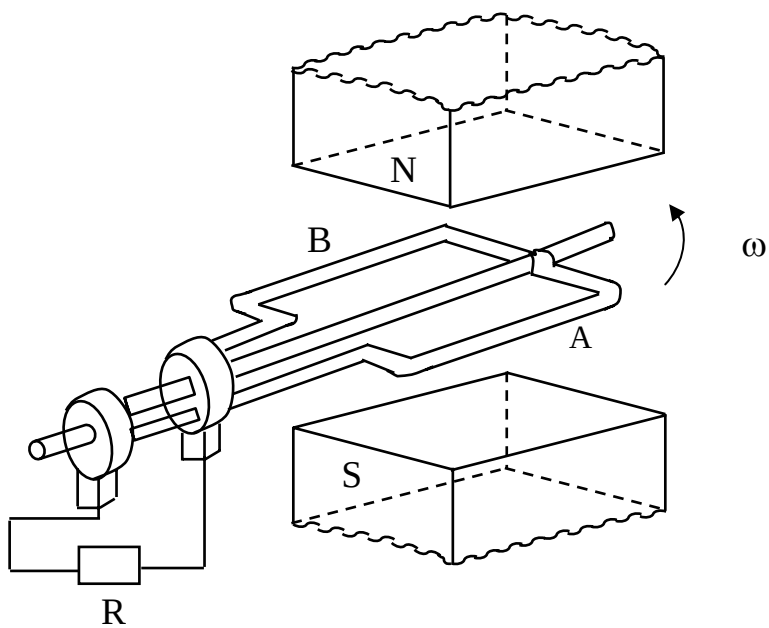

Fig. 12.1 Schematic diagram for single phase ac generation

A multi-turn coil is placed inside a magnet with an air gap as shown in Fig. 12.1. The flux lines are from North Pole to South Pole. The coil is rotated at an angular speed, $\omega = 2\pi n$ (rad/s).

$n = \dfrac{\omega}{2\pi}$ = speed of the coil (rev/sec, or rps)

$N = 60 \cdot n$ = speed of the coil (rev/min, or rpm)

l = length of the coil (m)

b = width (diameter) of the coil (m)

T = No. of turns in the coil

B = flux density in the air gap (Wb/m^2)
$v = \pi b n$ = tangential velocity of the coil (m/sec)

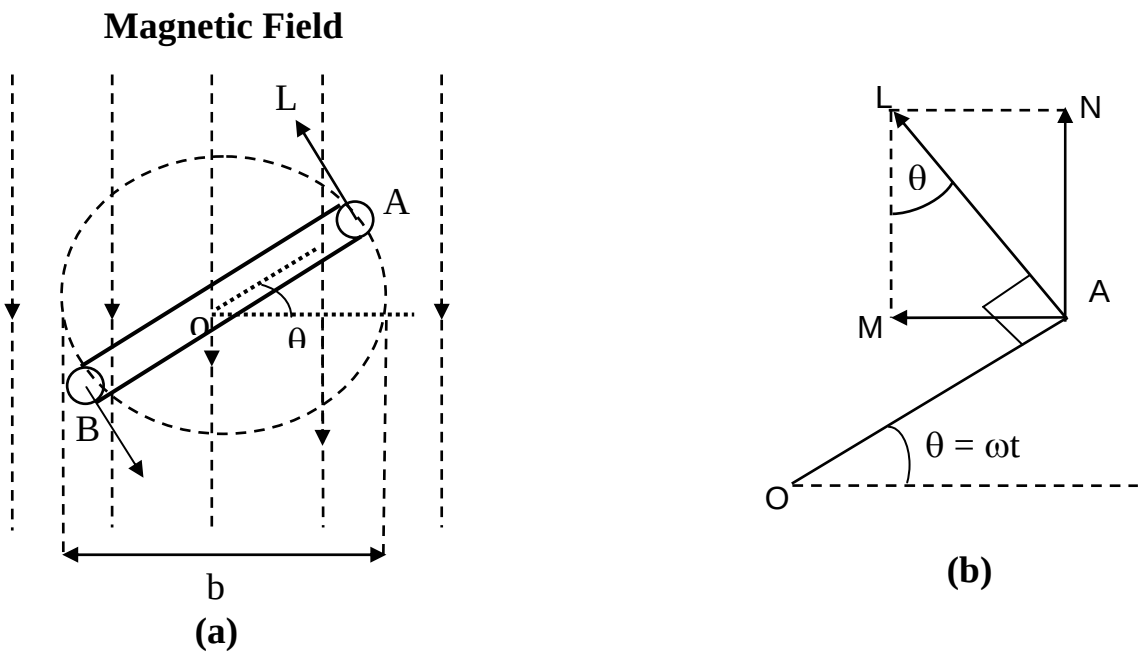

Fig. 12.2 (a) Coil position for Fig. 12.1, and (b) Details

At a certain instant t, the coil is an angle (rad), $\theta = \omega t$ with the horizontal (Fig. 12.2).
The emf (V) induced on one side of the coil (conductor) is $B l v \sin\theta$,
θ can also be termed as angular displacement.
The emf induced in the coil (single turn) is $2 B l v \sin\theta = 2 B l \pi b n \sin\theta$
The total emf induced or generated in the multi-turn coil is
$e(\theta) = T\, 2 B l \pi b n \sin\theta = 2\pi B l b n T \sin\theta = E_m \sin\theta$

This emf as a function of time, can be expressed as, $e(t) = E_m \sin\omega t$. The graph of $e(t)$ or $e(\theta)$, which is a sinusoidal waveform, is shown in Fig. 12.4a

Area of the coil $(m^2) = a = l b$
Flux cut by the coil (Wb) = $\phi = a B = l b B$
Flux linkage (Wb) = $\psi = T \phi = T B l b$

It may be noted these values of flux ϕ and flux linkage ψ, are maximum, with the coil being at horizontal position, $\theta = 0$. These values change, as the coil moves from the horizontal position (Fig. 12.2). So, also is the value of induced emf as stated earlier.

The maximum value of the induced emf is,

$$E_m = 2\pi n B l b T = 2\pi n \phi T = 2\pi n \psi = \omega \psi = \psi \frac{d\theta}{dt}$$

Determination of frequency (f) in the ac generator

In the above case, the frequency (Hz) of the emf generated is

$f = \omega/(2\pi) = n$, no. of poles being 2, i.e. having only <u>one</u> pole pair.

In the ac generator, no. of poles = p, and the speed (rps) = n, then the frequency in Hz or cycles/sec, is

f = no. of cycles/sec = no. of cycles per rev × no. of rev per sec = no. of pairs of poles × no. of rev per sec = $(p/2)\,n$

or, $f = \dfrac{pN}{120} = \dfrac{p}{2}\cdot\dfrac{\omega}{2\pi}$

Example

For a 4-pole ac generator to obtain a voltage having a frequency of 50 Hz,

the speed is, $n = \dfrac{2f}{p} = \dfrac{2\times 50}{4} = 25$ rps = $25\cdot 60 = 1{,}500$ rpm

For a 2-pole (p = 2) machine, the speed should be 3,000 rpm.

Similarly, the speed of the machine having different no. of poles, required to generate a frequency of 50 Hz can be computed.

Sinusoidal voltage waveform having frequency, f with time period (sec), $T = 1/f$

Periodic Voltage or Current Waveform

Average value

The current waveform shown in Fig. 12.3a, is periodic in nature, with time period, T. It is positive for first half cycle, while it is negative for second half cycle.

The average value of the waveform, $i(t)$ is defined as

$$I_{av} = \frac{Area\ over\ half\ cycle}{Time\ period\ of\ half\ cycle} = \frac{1}{T/2}\int_0^{T/2} i(t)\,dt = \frac{2}{T}\int_0^{T/2} i(t)\,dt$$

Please note that, in this case, only half cycle, or half of the time period, is to be used for computing the average value, as the average value of the waveform over full cycle is zero (0).

If the half time period (T/2) is divided into 6 equal time intervals (ΔT),

$$I_{av} = \frac{(i_1 + i_2 + i_3 + \cdots i_6)\Delta T}{6\cdot\Delta T} = \frac{(i_1 + i_2 + i_3 + \cdots i_6)}{6} = \frac{Area\ over\ half\ cycle}{Time\ period\ of\ half\ cycle}$$

Please note that no. of time intervals is n = 6.

Root Mean Square (RMS) value

For this current in half time period subdivided into 6 time intervals as given above, in the resistance R, the average value of energy dissipated is given by

$$\propto \left[\frac{(i_1^2 + i_2^2 + i_3^2 + \cdots i_6^2)}{6}\right] R$$

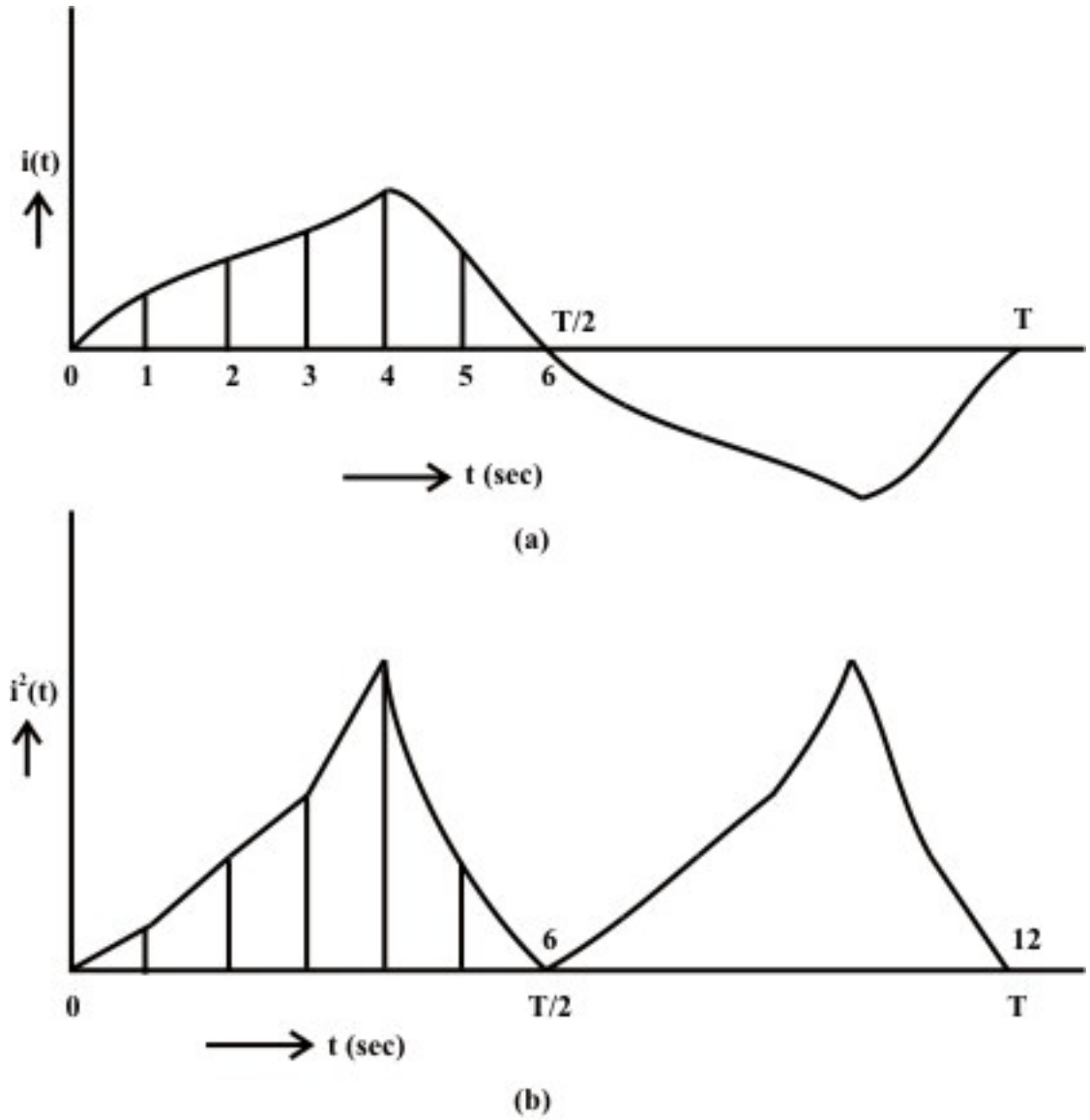

Fig. 12.3 Periodic current waveform
(a) Current (i), (b) Square of current (i^2)

The graph of the square of the current waveform, $i^2(t)$ is shown in Fig. 12.3b. Let I be the value of the direct current that produces the same energy dissipated in the resistance R, as produced by the periodic waveform with half time period subdivided into n time intervals,

$$I^2 R = \left[\frac{(i_1^2 + i_2^2 + i_3^2 + \cdots i_n^2)\,\Delta T}{n \cdot \Delta T} \right] R$$

$$I = \sqrt{\frac{(i_1^2 + i_2^2 + i_3^2 + \cdots i_n^2)\,\Delta T}{n \cdot \Delta T}} = \sqrt{\frac{Area\ of\ i^2\ curve\ over\ half\ cycle}{Time\ period\ of\ half\ cycle}}$$

$$= \sqrt{\frac{1}{T/2}\int_0^{T/2} i^2\, dt} = \sqrt{\frac{2}{T}\int_0^{T/2} i^2\, dt}$$

This value is termed as Root Mean Square (RMS) or effective one. Also to be noted that the same rms value of the current is obtained using the full cycle, or the time period.

Average and RMS Values of Sinusoidal Voltage Waveform

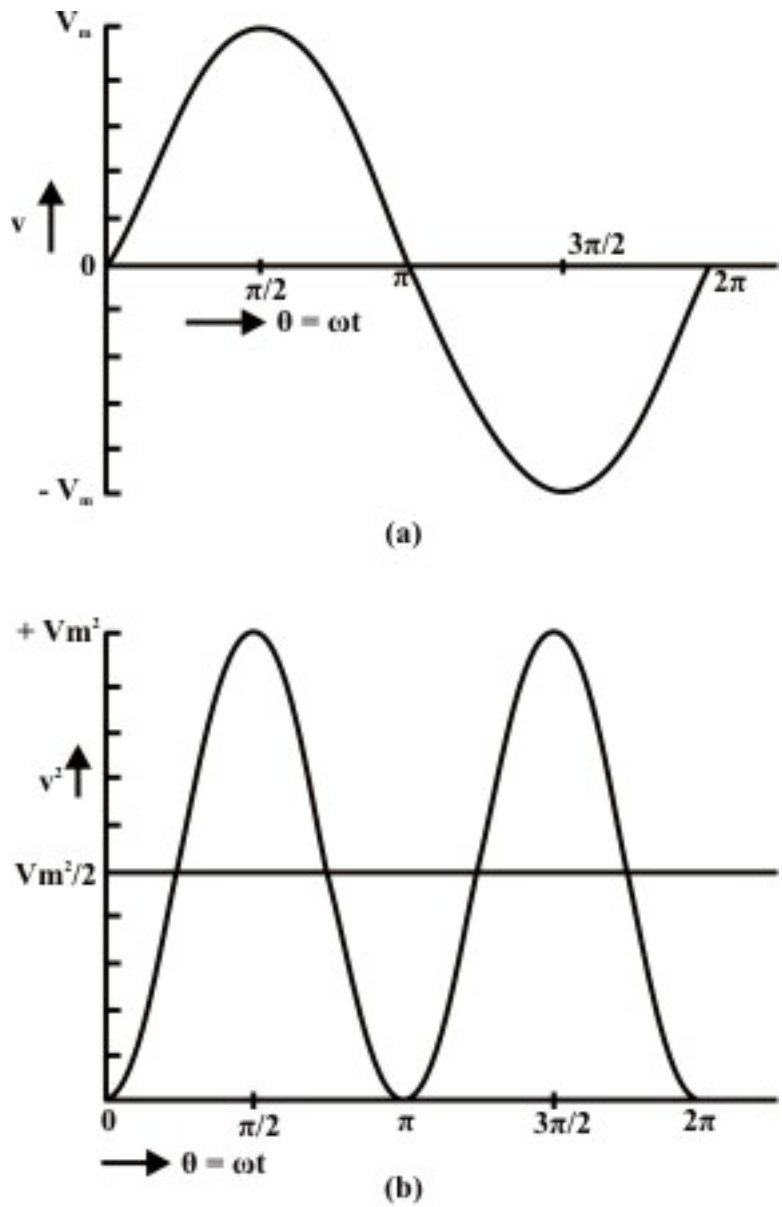

Fig. 12.4 Sinusoidal voltage waveform
(a) Voltage (v), (b) Square of voltage (v^2)

As shown earlier, normally the voltage generated, which is also transmitted and then distributed to the consumer, is the sinusoidal waveform with a frequency of 50 Hz in

this country. The waveform of the voltage $v(t)$, and the square of waveform, $v^2(t)$, are shown in figures 12.4a and12.4b respectively.

Time period, $T = 1/f = (2\pi)/\omega$; in angle ($\omega T = 2\pi$)

Half time period, $T/2 = 1/(2f) = \pi/\omega$; in angle ($\omega T/2 = \pi$)

$v(\theta) = V_m \sin\theta \quad for \quad \pi \le \theta \le 0; \qquad v(t) = V_m \sin\ \omega t \quad for \quad (\pi/\omega) \le t \le 0$

$$V_{av} = \frac{1}{\pi}\int_0^{\pi} v(\theta)\, d\theta = \frac{1}{\pi}\int_0^{\pi} V_m \sin\theta\, d\theta = \frac{V_m}{\pi}\cos\theta\Big|_{\pi}^{0} = \frac{2}{\pi}V_m = 0.637\, V_m$$

$$V = \left[\frac{1}{\pi}\int_0^{\pi} v^2\, d\theta\right]^{\frac{1}{2}} = \left[\frac{1}{\pi}\int_0^{\pi} V_m^2 \sin^2\theta\, d\theta\right]^{\frac{1}{2}} = \left[\frac{V_m^2}{\pi}\int_0^{\pi}\frac{1}{2}(1-\cos 2\theta)\, d\theta\right]^{\frac{1}{2}}$$

$$= \left[\frac{V_m^2}{2\pi}(\theta - \frac{1}{2}\sin 2\theta)\Big|_0^{\pi}\right]^{\frac{1}{2}} = \left[\frac{V_m^2}{2\pi}\pi\right]^{\frac{1}{2}} = \frac{V_m}{\sqrt{2}} = 0.707\, V_m$$

or, $V_m = \sqrt{2}\, V$

If time t, is used as a variable, instead of angle θ,

$$V_{av} = \frac{1}{\pi/\omega}\int_0^{\pi/\omega} v(t)\, dt = \frac{\omega}{\pi}\int_0^{\pi/\omega} V_m \sin\omega t\, dt = \frac{\omega V_m}{\pi\,\omega}\cos(\omega t)\Big|_{\pi}^{0} = \frac{2}{\pi}V_m = 0.637\, V_m$$

In the same way, the rms value, V can be determined.

If the average value of the above waveform is computed over total time period T, it comes out as zero, as the area of first (positive) half cycle is the same as that of second (negative) half cycle. However, the rms value remains same, if it is computed over total time period.

The different factors are defined as:

$$\text{Form factor} = \frac{RMS\ value}{Average\ value} = \frac{0.707\, V_m}{0.637\, V_m} = 1.11$$

$$\text{Peak factor} = \frac{Maximum\ value}{Average\ value} = \frac{V_m}{0.707\, V_m} = 1.414$$

Note: The rms value is always greater than the average value, except for a rectangular waveform, in which case the heating effect remains constant, so that the average and the rms values are same.

Example

The examples of the two waveforms given are periodic in nature.

1. Triangular current waveform (Fig. 12.5)

Time period = T

$$i(t) = I_m \frac{t}{T} \quad for \quad T \le t \le 0$$

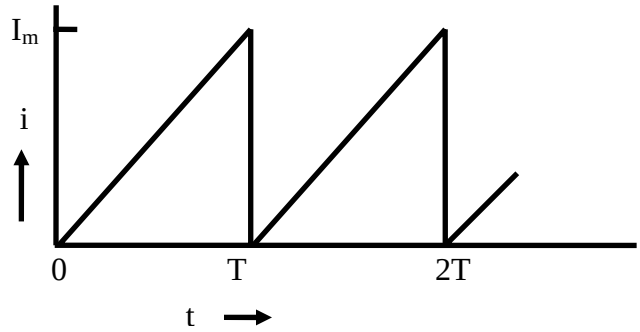

Fig. 12.5 Triangular current waveform

$$I_{av} = \frac{1}{T}\int_0^T i(t)\,dt = \frac{1}{T}\int_0^T I_m \frac{t}{T}\,dt = \frac{I_m}{T^2}\frac{t^2}{2}\bigg|_0^T = \frac{I_m}{T^2}\frac{T^2}{2} = \frac{I_m}{2} = 0.5\,I_m$$

$$I = \left[\frac{1}{T}\int_0^T i^2\,dt\right]^{\frac{1}{2}} = \left[\frac{1}{T}\int_0^T I_m^2 \frac{t^2}{T^2}dt\right]^{\frac{1}{2}} = \left[\frac{I_m^2}{T^3}\cdot\frac{t^3}{3}\bigg|_0^T\right]^{\frac{1}{2}} = \left[\frac{I_m^2}{T^3}\cdot\frac{T^3}{3}\right]^{\frac{1}{2}} = \left[\frac{I_m^2}{3}\right]^{\frac{1}{2}}$$

$$= \frac{I_m}{\sqrt{3}} = 0.57735\,I_m$$

Two factors of the waveform are:

$$\text{Form factor} = \frac{RMS\ value}{Average\ value} = \frac{0.57735\,I_m}{0.5\,I_m} = 1.1547$$

$$\text{Peak factor} = \frac{Maximum\ value}{Average\ value} = \frac{I_m}{0.5\,I_m} = 2.0$$

To note that the form factor is slightly higher than that for the sinusoidal waveform, while the peak factor is much higher.

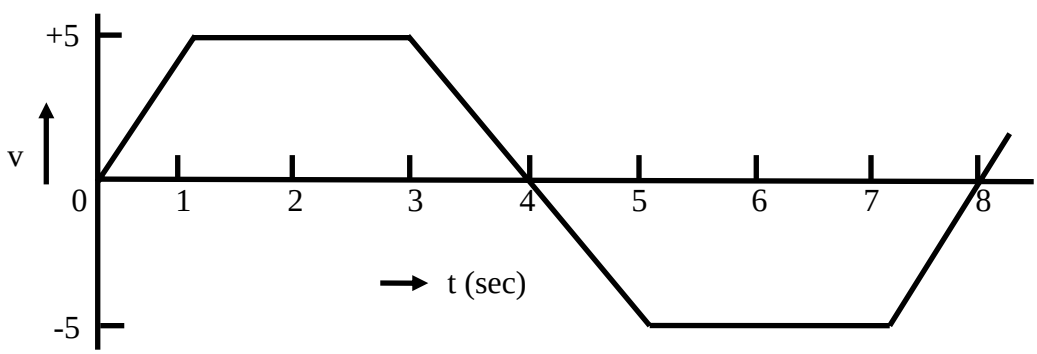

Fig. 12.6 Trapezoidal voltage waveform

2. Trapezoidal voltage waveform (Fig. 12.6)

   Time period (T) = 8 ms
   Half time period $(T/2) = 8/2 = 4\ ms$

$$v(t) = m\,t = (5/1)\,t = 5t \quad for \;\; 1 \le t \le 0\,; \qquad v(t) = 5 \quad for \;\; 3 \le t \le 1\,;$$
$$v(t) = 5\,(4-t) \quad for \;\; 4 \le t \le 3$$

Please note that time, t is in ms, and slope, m is in V/ms. Also to be noted that, as in the case of sinusoidal waveform, only half time period is taken here for the computation of the average and rms values.

$$V_{av} = \frac{1}{T/2}\int_0^{T/2} v(t)\;dt = \frac{1}{4}\left[\int_0^1 5t\,dt + \int_1^3 5\;dt + \int_3^4 5\;(4-t)\;dt\right] = \frac{1}{4}\left[\frac{5}{2}t^2\Big|_0^1 + 5t\Big|_1^3 + \frac{5}{2}(4-t)^2\Big|_4^3\right]$$
$$= \frac{1}{4}\left[\frac{5}{2} + 5(3-1) + \frac{5}{2}\right] = \frac{15}{4} = 3.75\;V$$
$$V = \left[\frac{1}{T/2}\int_0^{T/2} v^2\;dt\right]^{\frac{1}{2}} = \left[\frac{1}{4}\left(\int_0^1 (5t)^2\,dt + \int_1^3 (5)^2\;dt + \int_3^4 5\;(4-t)^2\;dt\right)\right]^{\frac{1}{2}}$$
$$= \left[\frac{1}{4}\left(\frac{25}{3}t^3\Big|_0^1 + 25t\Big|_1^3 + \frac{25}{3}(4-t)^3\Big|_4^3\right)\right]^{\frac{1}{2}} = \left[\frac{1}{4}\left(\frac{25}{3} + 25\;(3-1) + \frac{25}{3}\right)\right]^{\frac{1}{2}}$$
$$= \sqrt{\frac{50}{3}} = \sqrt{16.67} = 4.0825\;V$$

Two factors of the waveform are:

$$\text{Form factor} = \frac{RMS\;value}{Average\;value} = \frac{4.0825}{3.75} = 1.0887$$
$$\text{Peak factor} = \frac{Maximum\;value}{Average\;value} = \frac{5.0}{3.75} = 1.3333$$

To note that the both the above factors are slightly lower than those for the sinusoidal waveform.

Similarly, the average and rms or effective values of periodic voltage or current waveforms can be computed.

In this lesson, starting with the generation of single phase ac voltage, the terms, such as average and rms values, related to periodic voltage and current waveforms are explained with examples. In the next lesson, the background material required – the representation of sinusoidal voltage/current as phasors, the rectangular and polar forms of the phasors, as complex quantity, and the mathematical operations – addition/subtraction and multiplication/division, using phasors as complex quantity, are discussed in detail with numerical examples. In the following lessons, the study of circuits fed from single phase ac supply, is presented.

Problems

12.1 What is the speed in rpm of an ac generator with 4 poles, to produce a voltage with a frequency of 50 Hz

(a) 3000 (b) 1500 (c) 1000 (d) 750

12.2 Determine the No. of poles required in an ac generator running at 1,000 rpm, to produce a voltage with a frequency of 50 Hz.

(a) 2 (b) 4 (c) 6 (d) 8

12.3 Calculate the speed in rpm of an ac generator with 24 poles, to produce a voltage with a frequency of 50 Hz.

(a) 300 (b) 250 (c) 200 (d) 150

12.4 Determine the average and root mean square (rms) values of the following waveforms.

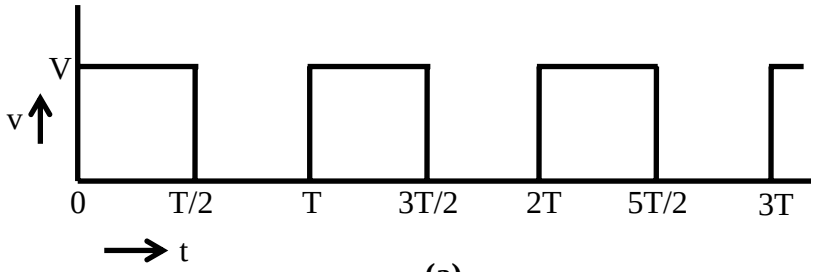

(a)

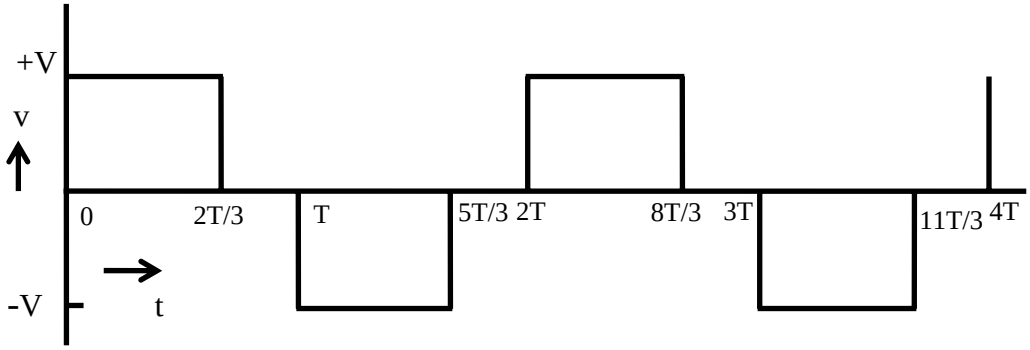

(b)

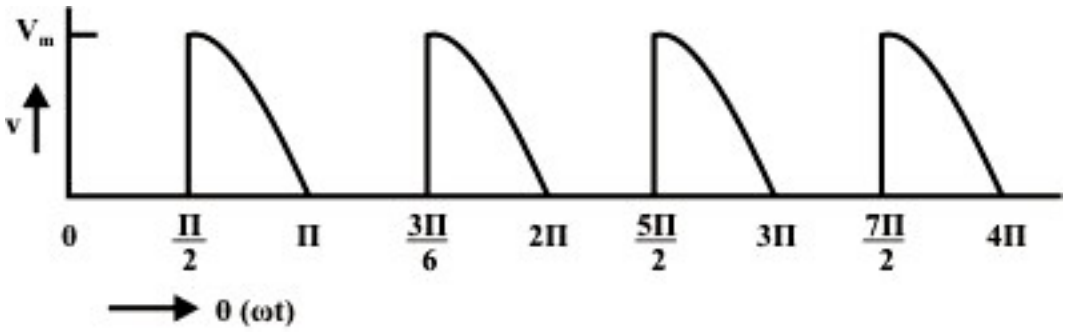

(c)

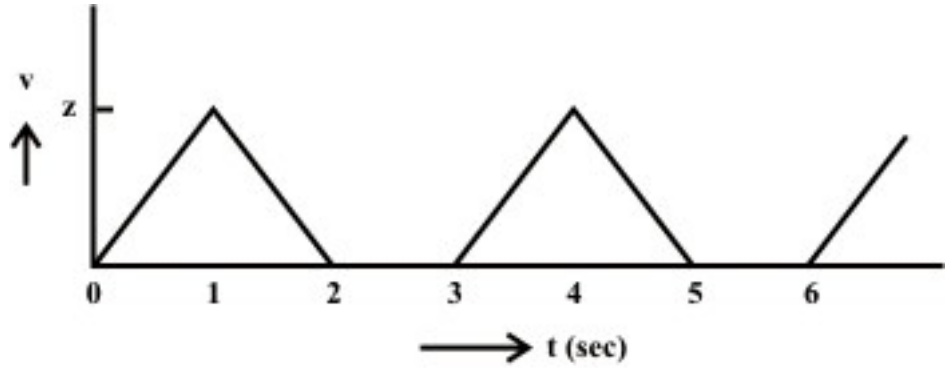

(d)

Fig. 12.7

List of Figures

Fig. 12.1 Schematic diagram for single phase ac generation

Fig. 12.2 (a) Coil position for Fig. 12.1, and (b) Details

Fig. 12.3 Periodic current (i) waveform

(a) Current (i), (b) Square of current (i^2)

Fig. 12.4 Sinusoidal voltage waveform

(a) Voltage (v), (b) Square of voltage (v^2)

Fig. 12.5 Triangular current waveform

Fig. 12.6 Trapezoidal voltage waveform

Module 4

Single-phase AC Circuits

Version 2 EE IIT, Kharagpur

Lesson 13

Representation of Sinusoidal Signal by a Phasor and Solution of Current in R-L-C Series Circuits

In the last lesson, two points were described:

1. How a sinusoidal voltage waveform (ac) is generated?
2. How the average and rms values of the periodic voltage or current waveforms, are computed?

Some examples are also described there. In this lesson, the representation of sinusoidal (ac) voltage/current signals by a phasor is first explained. The polar/Cartesian (rectangular) form of phasor, as complex quantity, is described. Lastly, the algebra, involving the phasors (voltage/current), is presented. Different mathematical operations – addition/subtraction and multiplication/division, on two or more phasors, are discussed.

Keywords: Phasor, Sinusoidal signals, phasor algebra

After going through this lesson, the students will be able to answer the following questions;

1. What is meant by the term, 'phasor' in respect of a sinusoidal signal?
2. How to represent the sinusoidal voltage or current waveform by phasor?
3. How to write a phasor quantity (complex) in polar/Cartesian (rectangular) form?
4. How to perform the operations, like addition/subtraction and multiplication/division on two or more phasors, to obtain a phasor?

This lesson forms the background of the following lessons in the complete module of single ac circuits, starting with the next lesson on the solution of the current in the steady state, in R-L-C series circuits.

Symbols

i or i(t)	Instantaneous value of the current (sinusoidal form)
I	Current (rms value)
I_m	Maximum value of the current
$\bar{I}$	Phasor representation of the current
ϕ	Phase angle, say of the current phasor, with respect to the reference phasor

Same symbols are used for voltage or any other phasor.

Representation of Sinusoidal Signal by a Phasor

A sinusoidal quantity, i.e. current, $i(t) = I_m \sin \omega t$, is taken up as an example. In Fig. 13.1a, the length, OP, along the x-axis, represents the maximum value of the current I_m, on a certain scale. It is being rotated in the anti-clockwise direction at an angular speed, ω, and takes up a position, OA after a time t (or angle, $\theta = \omega t$, with the x-axis). The vertical projection of OA is plotted in the right hand side of the above figure with respect to the angle θ. It will generate a sine wave (Fig. 13.1b), as OA is at an angle, θ with the x-axis, as stated earlier. The vertical projection of OA along y-axis is OC = AB =

$i(\theta) = I_m \sin\theta$, which is the instantaneous value of the current at any time t or angle θ. The angle θ is in rad., i.e. $\theta = \omega t$. The angular speed, ω is in rad/s, i.e. $\omega = 2\pi f$, where f is the frequency in Hz or cycles/sec. Thus,

$$i = I_m \sin\theta = I_m \sin\omega t = I_m \sin 2\pi ft$$

So, OP represents the phasor with respect to the above current, i.

The line, OP can be taken as the rms value, $I = I_m / \sqrt{2}$, instead of maximum value, I_m. Then the vertical projection of OA, in magnitude equal to OP, does not represent exactly the instantaneous value of I, but represents it with the scale factor of $1/\sqrt{2} = 0.707$. The reason for this choice of phasor as given above, will be given in another lesson later in this module.

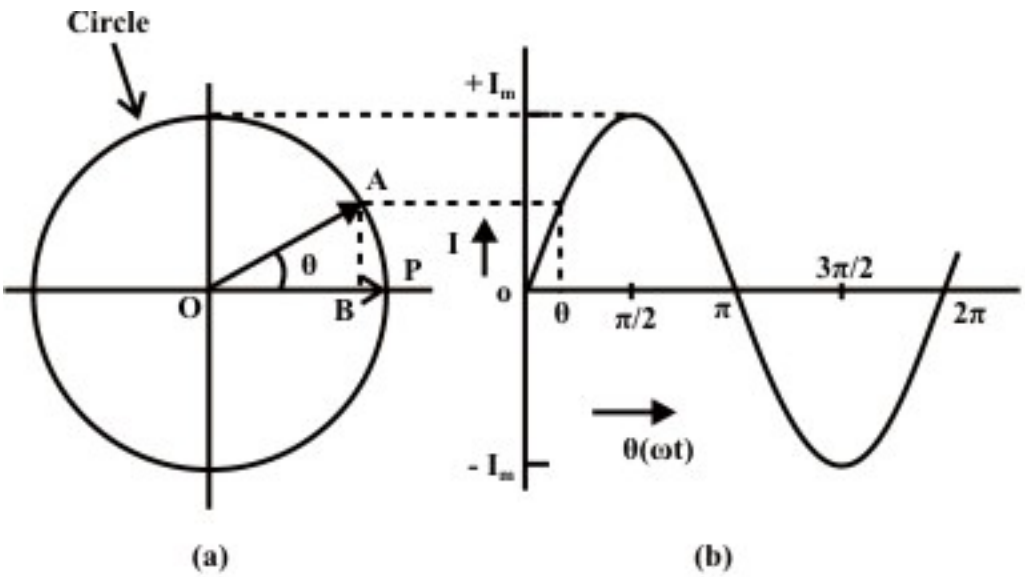

Fig. 13.1(a) Phasor representation of a sinusoidal current, and (b) Waveform

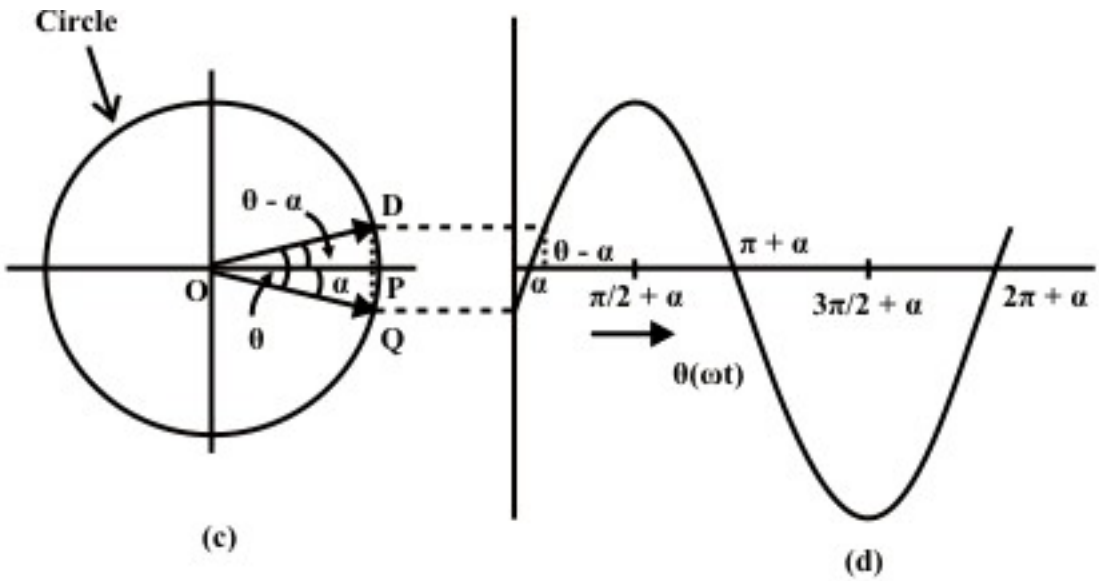

Fig. 13.1 (c) Phasor representation of a phase shifted sinusoidal current, and (d) Waveform

Generalized case

The current can be of the form, $i(t) = I_m \sin(\omega t - \alpha)$ as shown in Fig. 13.1d. The phasor representation of this current is the line, OQ, at an angle, α (may be taken as negative), with the line, OP along x-axis (Fig. 13.1c). One has to move in clockwise direction to go to OQ from OP (reference line), though the phasor, OQ is assumed to move in anti-clockwise direction as given earlier. After a time t, OD will be at an angle θ with OQ, which is at an angle ($\theta - \alpha = \omega t - \alpha$), with the line, OP along x-axis. The vertical projection of OD along y-axis gives the instantaneous value of the current,

$$i = \sqrt{2}\, I \sin(\omega t - \alpha) = I_m \sin(\omega t - \alpha).$$

Phasor representation of Voltage and Current

The voltage and current waveforms are given as,

$v = \sqrt{2}\, V \sin\theta$, and $i = \sqrt{2}\, I \sin(\theta + \phi)$

It can be seen from the waveforms (Fig. 13.2b) of the two sinusoidal quantities – voltage and current, that the voltage, V lags the current I, which means that the positive maximum value of the voltage is reached earlier by an angle, ϕ, as compared to the positive maximum value of the current. In phasor notation as described earlier, the voltage and current are represented by OP and OQ (Fig. 13.2a) respectively, the length of which are proportional to voltage, V and current, I in different scales as applicable to each one. The voltage phasor, OP (V) lags the current phasor, OQ (I) by the angle ϕ, as two phasors rotate in the anticlockwise direction as stated earlier, whereas the angle ϕ is also measured in the anticlockwise direction. In other words, the current phasor (I) leads the voltage phasor (V).

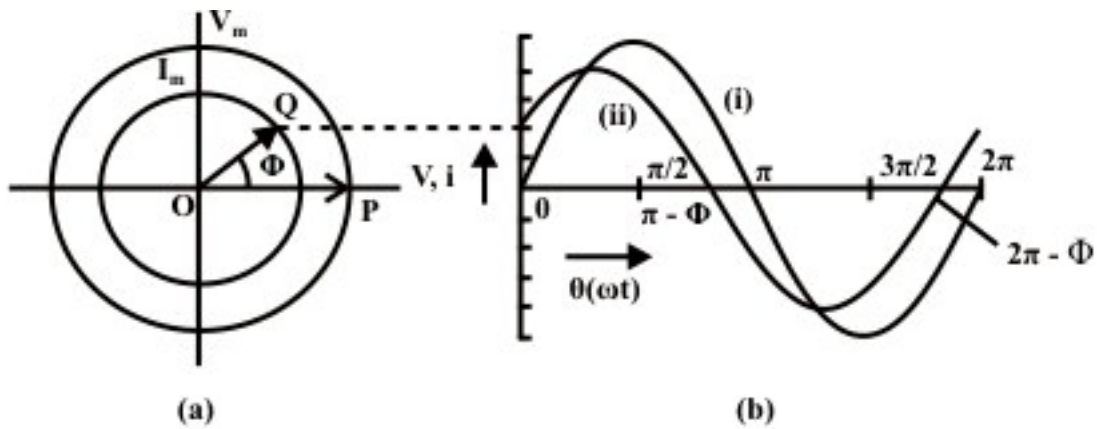

Fig. 13.2 (a) Phasor representation of a sinusoidal (i) voltage and (ii) current, and (b) Waveforms

Mathematically, the two phasors can be represented in polar form, with the voltage phasor ($\bar{V}$) taken as reference, such as $\bar{V} = V\angle 0^0$, and $\bar{I} = I\angle\phi$.

In Cartesian or rectangular form, these are,

$\bar{V} = V\angle 0^0 = V + j0$, and $\bar{I} = I\angle\phi = I\cos\phi + jI\sin\phi$,

where, the symbol, j is given by $j = \sqrt{-1}$.

Of the two terms in each phasor, the first one is termed as real or its component in x-axis, while the second one is imaginary or its component in y-axis, as shown in Fig. 13.3a. The angle, ϕ is in degree or rad.

Phasor Algebra

Before discussing the mathematical operations, like addition/subtraction and multiplication/division, involving phasors and also complex quantities, let us take a look at the two forms – polar and rectangular, by which a phasor or complex quantity is represented. It may be observed here that phasors are also taken as complex, as given above.

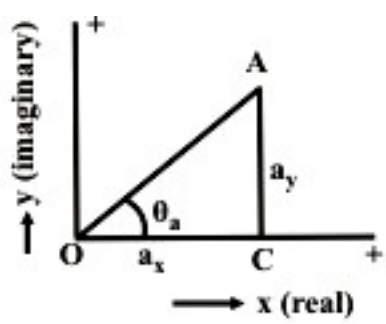

Fig. 13.3 Representation of a phasor, both in rectangular and polar forms

Representation of a phasor and Transformation

A phasor or a complex quantity in rectangular form (Fig. 13.3) is,

$\bar{A} = a_x + j\,a_y$

where a_x and a_y are real and imaginary parts, of the phasor respectively.

In polar form, it is expressed as

$$\bar{A} = A\angle\theta_a = A\cos\theta_a + j\,A\sin\theta_a$$

where A and θ_a are magnitude and phase angle of the phasor.

From the two equations or expressions, the procedure or rule of transformation from polar to rectangular form is

$$a_x = A\cos\theta_a \text{ and } a_y = A\sin\theta_a$$

From the above, the rule for transformation from rectangular to polar form is

$$A = \sqrt{a_x^2 + a_y^2} \text{ and } \theta_a = \tan^{-1}\left(a_y / a_x\right)$$

The examples using numerical values are given at the end of this lesson.

Addition/Subtraction of Phasors

Before describing the rules of addition/subtraction of phasors or complex quantities, everyone should recall the rule of addition/subtraction of scalar quantities, which may be positive or signed (decimal/fraction or fraction with integer). It may be stated that, for the two operations, the quantities must be either phasors, or complex. The example of phasor is voltage/current, and that of complex quantity is impedance/admittance, which will be explained in the next lesson. But one phasor and another complex quantity should not be used for addition/subtraction operation.

For the operations, the two phasors or complex quantities must be expressed in rectangular form as

$$\bar{A} = a_x + j\,a_y \;;\quad \bar{B} = b_x + j\,b_y$$

If they are in polar form as

$$\bar{A} = A\angle\theta_a \;;\quad \bar{B} = B\angle\theta_b$$

In this case, two phasors are to be transformed to rectangular form by the procedure or rule given earlier.

The rule of addition/subtraction operation is that both the real and imaginary parts have to be separately treated as

$$\bar{C} = \bar{A} \pm \bar{B} = \left(a_x \pm b_x\right) + j\left(a_y \pm b_y\right) = c_x + j\,c_y$$

where $c_x = \left(a_x \pm b_x\right)$; $c_y = \left(a_y \pm b_y\right)$

Say, for addition, real parts must be added, so also for imaginary parts. Same rule follows for subtraction. After the result is obtained in rectangular form, it can be transformed to polar one. It may be observed that the six values of $a's$, $b's$ and $c's$ – parts of the two phasors and the resultant one, are all signed scalar quantities, though in the example, $a's$ and $b's$ are taken as positive, resulting in positive values of $c's$. Also the phase angle $\theta's$ may lie in any of the four quadrants, though here the angles are in the first quadrant only.

This rule for <u>addition</u> can be extended to three or more quantities, as will be illustrated through example, which is given at the end of this lesson.

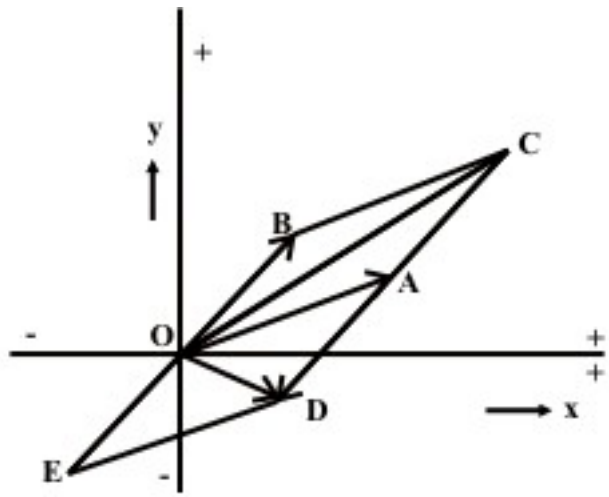

Fig. 13.4 Addition and subtraction of two phasors, both represented in polar form

The addition/subtraction operations can also be performed using the quantities as phasors in polar form (Fig. 13.4). The two phasors are $\bar{A}(OA)$ and $\bar{B}(OB)$. The find the sum $\bar{C}(OC)$, a line AC is drawn equal and parallel to OB. The line BC is equal and parallel to OA. Thus, $\bar{C} = OC = OA + AC = OA + OB = \bar{A} + \bar{B}$. Also,

$OC = OB + BC = OB + OA$

To obtain the difference $\bar{D}(OD)$, a line AD is drawn equal and parallel to OB, but in opposite direction to AC or OB. A line OE is also drawn equal to OB, but in opposite direction to OB. Both AD and OE represent the phasor ($-\bar{B}$). The line, ED is equal to OA. Thus, $\bar{D} = OD = OA + AD = OA - OB = \bar{A} - \bar{B}$. Also $OD = OE + ED = -OB + OA$. The examples using numerical values are given at the end of this lesson.

Multiplication/Division of Phasors

Firstly, the procedure for multiplication is taken up. In this case no reference is being made to the rule involving scalar quantities, as everyone is familiar with them. Assuming that the two phasors are available in polar from as $\bar{A} = A\angle\theta_a$ and $\bar{B} = B\angle\theta_b$. Otherwise, they are to be transformed from rectangular to polar form. This is also valid for the procedure of division. Please note that a phasor is to be multiplied by a complex quantity only, to obtain the resultant phasor. A phasor is not normally multiplied by another phasor, except in special case. Same is for division. A phasor is to be divided by a complex quantity only, to obtain the resultant phasor. A phasor is not normally divided by another phasor.

To find the magnitude of the product $\bar{C}$, the two magnitudes of the phasors are to be multiplied, whereas for phase angle, the phase angles are to added. Thus,

$$\bar{C} = C\angle\theta_c = \bar{A}\cdot\bar{B} = A\angle\theta_A \cdot B\angle\theta_B = (A\cdot B)\angle(\theta_a + \theta_b)$$

where $C = A\cdot B$ and $\theta_c = \theta_a + \theta_b$

Please note that the same symbol, $\bar{C}$ is used for the product in this case.

To divide $\bar{A}$.by $\bar{B}$ to obtain the result $\bar{D}$., the magnitude is obtained by division of the magnitudes, and the phase is difference of the two phase angles. Thus,

$$\bar{D} = D\angle\theta_d = \frac{\bar{A}}{\bar{B}} = \frac{A\angle\theta_a}{B\angle\theta_b} = \left(\frac{A}{B}\right)\angle(\theta_a - \theta_b)$$

where $D = A/B$ and $\theta_d = \theta_a - \theta_b$

If the phasors are expressed in rectangular form as

$\bar{A} = a_x + j\,a_y$ and $\bar{B} = b_x + j\,b_y$

where $A = \sqrt{(a_x^2 + a_y^2)}$; $\theta_a = \tan^{-1}(a_y / a_x)$

The values of $\bar{B}$ are not given as they can be obtained by substituting $b's$ for $a's$.
To find the product,

$$\bar{C} = C\angle\theta_c = \bar{A}\cdot\bar{B} = (a_x + j\,a_y)\cdot(b_x + j\,b_y) = (a_x b_x - a_y b_y) + j(a_x b_y + a_y b_x)$$

Please note that $j^2 = -1$ .The magnitude and phase angle of the result (phasor) are,

$$C = \left[(a_x b_x - a_y b_y)^2 + (a_x b_y + a_y b_x)^2\right]^{\frac{1}{2}} = \sqrt{(a_x^2 + a_y^2)}\cdot\sqrt{(b_x^2 + b_y^2)} = A\cdot B \text{ , and}$$

$$\theta_c = \tan^{-1}\left(\frac{a_x b_y + a_y b_x}{a_x b_x - a_y b_y}\right)$$

The phase angle,

$$\theta_c = \theta_a + \theta_b = \tan^{-1}\left(\frac{a_y}{a_x}\right) + \tan^{-1}\left(\frac{b_y}{b_x}\right) = \tan^{-1}\left[\frac{(a_y / a_x) + (b_y / b_x)}{1 - (a_y / a_x)\cdot(b_y / b_x)}\right]$$

$$= \tan^{-1}\left(\frac{a_x b_y + a_y b_x}{a_x b_x - a_y b_y}\right)$$

The above results are obtained by simplification.

To divide $\bar{A}$ by $\bar{B}$ to obtain $\bar{D}$ as

$$\bar{D} = d_x + j\,d_y = \frac{\bar{A}}{\bar{B}} = \frac{a_x + j\,a_y}{b_x + j\,b_y}$$

To simplify $\bar{D}$, i.e. to obtain real and imaginary parts, both numerator and denominator, are to be multiplied by the complex conjugate of $\bar{B}$, so as to convert the denominator into real value only. The complex conjugate of $\bar{B}$ is

$$B^* = b_x + j\,b_y = B\angle -\theta_b$$

In the complex conjugate, the sign of the imaginary part is negative, and also the phase angle is negative.

$$\bar{D} = d_x + j\,d_y = \frac{(a_x + j\,a_y)\cdot(b_x - j\,b_y)}{(b_x + j\,b_y)\cdot(b_x - j\,b_y)} = \left(\frac{a_x b_x + a_y b_y}{b_x^2 + b_y^2}\right) + j\left(\frac{a_y b_x - a_x b_y}{b_x^2 + b_y^2}\right)$$

The magnitude and phase angle of the result (phasor) are,

$$D = \frac{\left[(a_x b_x + a_y b_y)^2 + (a_y b_x - a_x b_y)^2\right]^{\frac{1}{2}}}{(b_x^2 + b_y^2)} = \frac{\sqrt{(a_x^2 + a_y^2)}}{\sqrt{(b_x^2 + b_y^2)}} = \frac{A}{B}\text{ , and}$$

$$\theta_d = \tan^{-1}\left(\frac{a_y b_x - a_x b_y}{a_x b_x + a_y b_y}\right)$$

The phase angle,

$$\theta_d = \theta_a - \theta_b = \tan^{-1}\left(\frac{a_y}{a_x}\right) - \tan^{-1}\left(\frac{b_y}{b_x}\right) = \tan^{-1}\left(\frac{a_y b_x - a_x b_y}{a_x b_x + a_y b_y}\right)$$

The steps are shown here in brief, as detailed steps have been given earlier.

Example

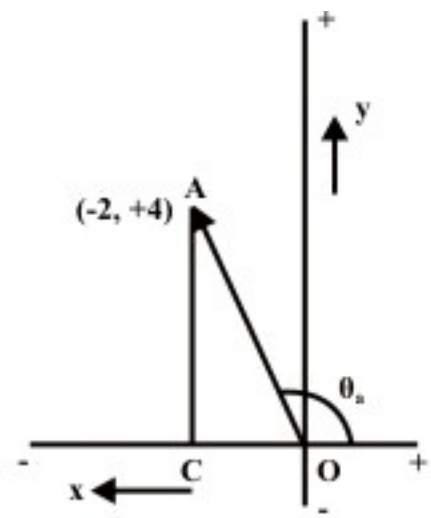

Fig. 13.5 Representation of phasor as an example, both in rectangular and polar forms

The phasor, $\bar{A}$ in the rectangular form (Fig. 13.5) is,

$$\bar{A} = A\angle\theta_a = A\cos\theta_a + j\,A\sin\theta_a = a_x + j\,a_y = -2 + j\,4$$

where the real and imaginary parts are $a_x = -2$; $a_y = 4$

To transform the phasor, $\bar{A}$ into the polar form, the magnitude and phase angle are

$$A = \sqrt{a_x^2 + a_y^2} = \sqrt{(-2)^2 + 4^2} = 4.472$$

$$\theta_a = \tan^{-1}\left(\frac{a_y}{a_x}\right) = \tan^{-1}\left(\frac{4}{-2}\right) = 116.565° = 2.034\,rad$$

Please note that θ_a is in the second quadrant, as real part is negative and imaginary part is positive.

Transforming the phasor, $\bar{A}$ into rectangular form, the real and imaginary parts are

$$a_x = A\cos\theta_a = 4.472 \cdot \cos 116.565° = -2.0$$

$$a_y = A\sin\theta_a = 4.472 \cdot \sin 116.565° = 4.0$$

Phasor Algebra

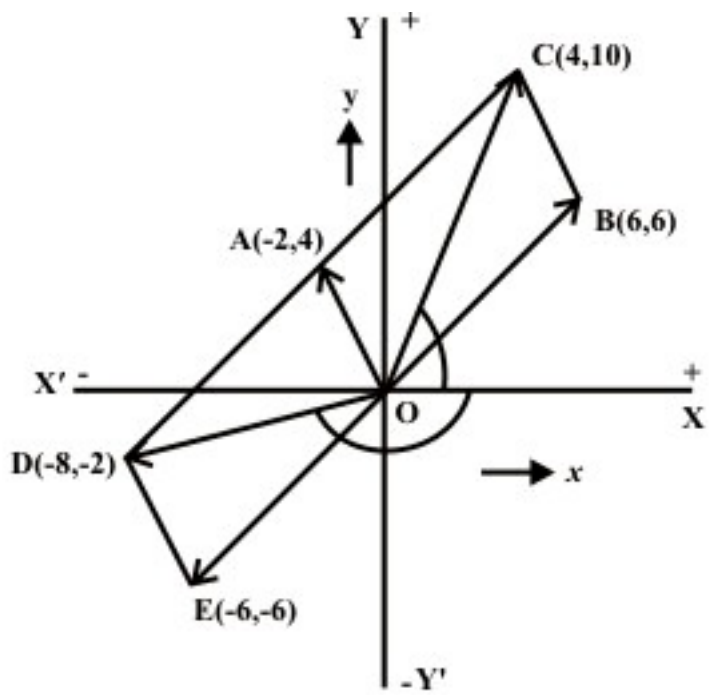

Fig.13.6 Addition and subtraction of two phasors represented in polar form, as an example

Another phasor, $\bar{B}$ in rectangular form is introduced in addition to the earlier one, $\bar{A}$

$$\bar{B} = 6 + j6 = 8.485\angle 45°$$

Firstly, let us take the addition and subtraction of the above two phasors. The sum and difference are given by the phasors, $\bar{C}$ and $\bar{D}$ respectively (Fig. 13.6).

$$\bar{C} = \bar{A} + \bar{B} = (-2 + j4) + (6 + j6) = (-2+6) + j(4+6) = 4 + j10 = 10.77\angle 68.2°$$

$$\bar{D} = \bar{A} - \bar{B} = (-2 + j4) - (6 + j6) = (-2-6) + j(4-6) = -8 - j2 = 8.246\angle -166.0°$$

It may be noted that for the addition and subtraction operations involving phasors, they should be represented in rectangular form as given above. If any one of the phasors

is in polar form, it should be transformed into rectangular form, for calculating the results as shown.

If the two phasors are both in polar form, the phasor diagram (the diagram must be drawn to scale), or the geometrical method can be used as shown in Fig 13.6. The result obtained using the diagram, as shown are the same as obtained earlier.

[$\bar{C}$ (OC) = 10.77, $\angle COX = 68.2°$; and $\bar{D}$ (OD) = 8.246, $\angle DOX = 166.0°$]

Now, the multiplication and division operations are performed, using the above two phasors represented in polar form. If any one of the phasors is in rectangular form, it may be transformed into polar form. Also note that the same symbols for the phasors are used here, as was used earlier. Later, the method of both multiplication and division using rectangular form of the phasor representation will be explained.

The resultant phasor $\bar{C}$, i.e. the product of the two phasors is

$$\bar{C} = \bar{A} \cdot \bar{B} = 4.472\angle 116.565° \times 8.485\angle 45° = (4.472 \times 8.485)\angle(116.565° + 45°)$$

$$= 37.945\angle 161.565° = -36 + j12$$

The product of the two phasors in rectangular form can be found as

$$\bar{C} = (-2 + j4) \cdot (6 + j6) = (-12 - 24) + j(24 - 12) = -36 + j12$$

The result ($\bar{D}$) obtained by the division of $\bar{A}$ by $\bar{B}$ is

$$\bar{D} = \frac{\bar{A}}{\bar{B}} = \frac{4.472\angle 116.565°}{8.485\angle 45°} = \left(\frac{4.472}{8.485}\right)\angle(116.565° - 45°) = 0.527\angle 71.565°$$

$$= 0.167 + j0.5$$

The above result can be calculated by the procedure described earlier, using the rectangular form of the two phasors as

$$\bar{D} = \frac{\bar{A}}{\bar{B}} = \frac{-2 + j4}{6 + j6} = \frac{(-2 + j4) \cdot (6 - j6)}{(6 + j6) \cdot (6 - j6)} = \frac{(-12 + 24) + j(24 + 12)}{6^2 + 6^2}$$

$$= \frac{12 + j36}{72} = 0.167 + j0.5$$

The procedure for the elementary operations using two phasors only, in both forms of representation is shown. It can be easily extended, for say, addition/multiplication, using three or more phasors. The simplification procedure with the scalar quantities, using the different elementary operations, which is well known, can be extended to the phasor quantities. This will be used in the study of ac circuits to be discussed in the following lessons.

The background required, i.e. phasor representation of sinusoidal quantities (voltage/current), and algebra – mathematical operations, such as addition/subtraction and multiplication/division of phasors or complex quantities, including transformation of phasor from rectangular to polar form, and vice versa, has been discussed here. The study of ac circuits, starting from series ones, will be described in the next few lessons.

Problems

13.1 Use plasor technique to evaluate the expression and then find the numerical value at t = 10 ms.

$$i(t) = 150\cos\left(100t - 45^0\right) + 500\sin\left(100t\right) + \frac{d}{dt}\left[\cos\left(100t - 30^0\right)\right]$$

13.2 Find the result in both rectangular and polar forms, for the following, using complex quantities:

a) $\dfrac{5 - j12}{15\angle 53.1°}$

b) $\left(5 - j12\right) + 15\angle -53.1°$

c) $\dfrac{2\angle 30° - 4\angle 210°}{5\angle 450°}$

d) $\left(5\angle 0° + \dfrac{1}{3\sqrt{2}\angle -45°}\right).2\angle 210°$

List of Figures

Fig. 13.1 (a) Phasor representation of a sinusoidal voltage, and (b) Waveform

Fig. 13.2 (a) Phasor representation of voltage and current, and (b) Waveforms

Fig. 13.3 Representation of a phasor, both in rectangular and polar forms

Fig. 13.4 Addition and subtraction of two phasors, both represented in polar form

Fig. 13.5 Representation of phasor as an example, both in rectangular and polar forms

Fig. 13.6 Addition and subtraction of two phasors represented in polar form, as an example

Module 4

Single-phase AC Circuits

Lesson 14

Solution of Current in R-L-C Series Circuits

In the last lesson, two points were described:

1. How to represent a sinusoidal (ac) quantity, i.e. voltage/current by a phasor?
2. How to perform elementary mathematical operations, like addition/ subtraction and multiplication/division, of two or more phasors, represented as complex quantity?

Some examples are also described there. In this lesson, the solution of the steady state currents in simple circuits, consisting of resistance R, inductance L and/or capacitance C connected in series, fed from single phase ac supply, is presented. Initially, only one of the elements R / L / C, is connected, and the current, both in magnitude and phase, is computed. Then, the computation of total reactance and impedance, and the current, in the circuit consisting of two components, R & L / C only in series, is discussed. The process of drawing complete phasor diagram with current(s) and voltage drops in the different components is described. Lastly, the computation of total power and also power consumed in the components, along with the concept of power factor, is explained.

Keywords: Series circuits, reactance, impedance, phase angle, power, power factor.

After going through this lesson, the students will be able to answer the following questions;

1. How to compute the total reactance and impedance of the R-L-C series circuit, fed from single phase ac supply of known frequency?
2. How to compute the current and also voltage drops in the components, both in magnitude and phase, of the circuit?
3. How to draw the complete phasor diagram, showing the current and voltage drops?
4. How to compute the total power and also power consumed in the components, along with power factor?

Solution of Steady State Current in Circuits Fed from Single-phase AC Supply

Elementary Circuits

1. Purely resistive circuit (R only)

The instantaneous value of the current though the circuit (Fig. 14.1a) is given by,

$$i = \frac{v}{R} = \frac{V_m}{R}\sin\ \omega t = I_m \sin\ \omega t$$

where,

I_m and V_m are the maximum values of current and voltage respectively.

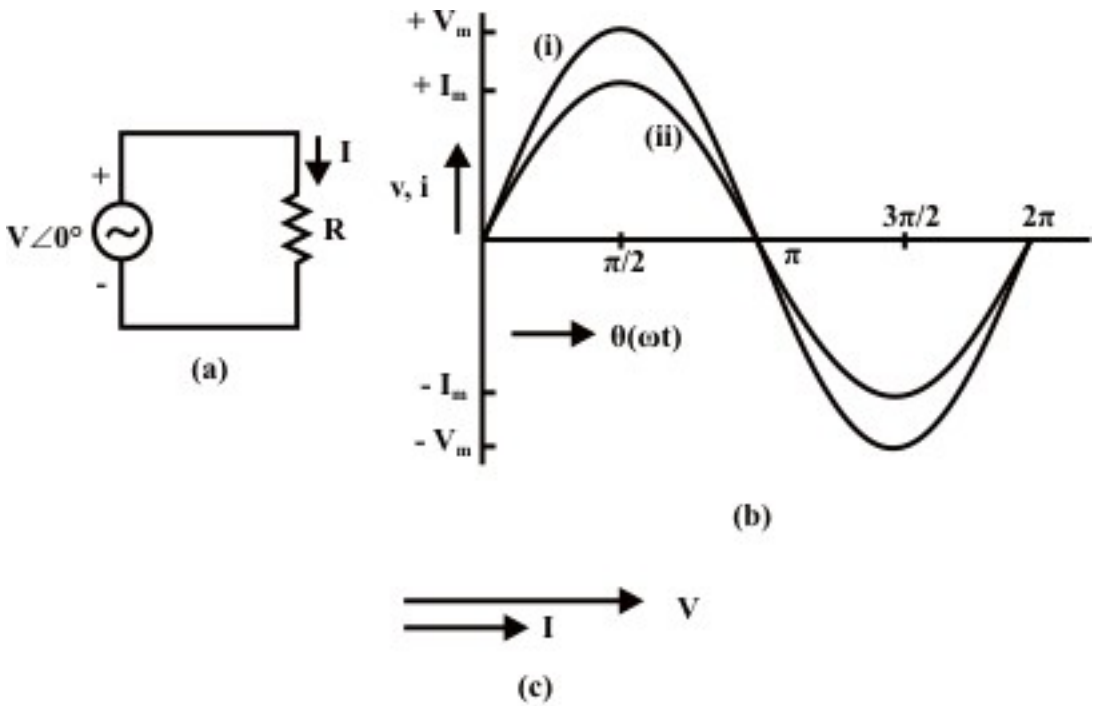

Fig. 14.1: Circuit with Resistance (R)
(a) Circuit diagram
(b) Waveforms: (i) Voltage (ii) Current
(c) Phasor diagram

The rms value of current is given by

$$\bar{I} = \frac{I_m}{\sqrt{2}} = \frac{V_m / \sqrt{2}}{R} = \frac{\bar{V}}{R}$$

In phasor notation,

$$\bar{V} = V\angle 0° = V(1 + j0) = V + j0$$

$$\bar{I} = I\angle 0° = I(1 + j0) = I + j0$$

The impedance or resistance of the circuit is obtained as,

$$\frac{\bar{V}}{\bar{I}} = \frac{V\angle 0°}{I\angle 0°} = Z\angle 0° = R + j0$$

Please note that the voltage and the current are in phase ($\phi = 0°$), which can be observed from phasor diagram (Fig. 14.1b) with two (voltage and current) phasors, and also from the two waveforms (Fig. 14.1c).

In ac circuit, the term, Impedance is defined as voltage/current, as is the resistance in dc circuit, following Ohm's law. The impedance, Z is a complex quantity. It consists of real part as resistance R, and imaginary part as reactance X, which is zero, as there is no inductance/capacitance. All the components are taken as constant, having linear V-I characteristics. In the three cases being considered, including this one, the power

consumed and also power factor in the circuits, are not taken up now, but will be described later in this lesson.

2. Purely inductive circuit (L only)

For the circuit (Fig. 14.2a), the current i, is obtained by the procedure described here.

As $v = L\dfrac{di}{dt} = V_m \sin\,\omega t = \sqrt{2}V \sin\,\omega t$,

$$di = \frac{\sqrt{2}V}{L}\sin(\omega t)\;dt$$

Integrating,

$$i = -\frac{\sqrt{2}V}{\omega L}\cos\,\omega t = \frac{\sqrt{2}V}{\omega L}\sin\,(\omega t - 90°) = I_m \sin\,(\omega t - 90°) = \sqrt{2}\,I \sin\,(\omega t - 90°)$$

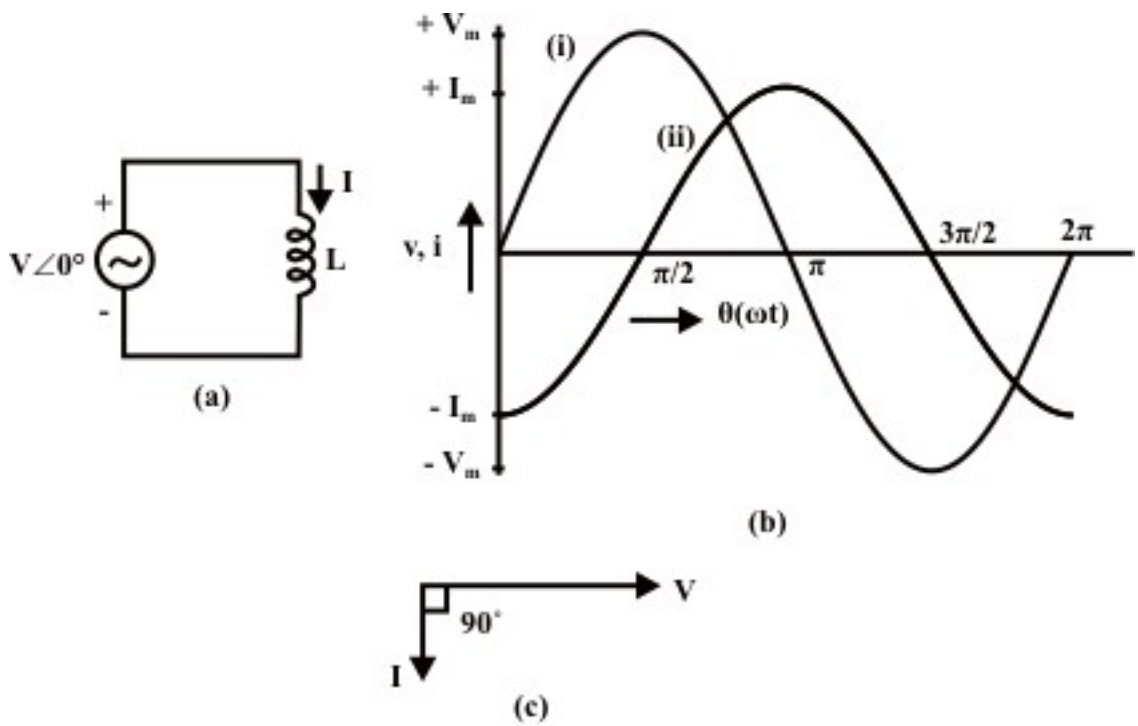

Fig. 14.2: Circuit with Inductance (L)
(a) Circuit diagram
(b) Waveforms: (i) Voltage (ii) Current
(c) Phasor diagram

It may be mentioned here that the current i, is the steady state solution, neglecting the constant of integration. The rms value, I is

$$\bar{I} = \frac{\bar{V}}{\omega L} = I\angle -90°$$

$$\bar{V} = V\angle 0° = V + j0 \quad ; \qquad \bar{I} = I\angle -90° = 0 - jI$$

The impedance of the circuit is

$$Z\angle\phi = \frac{\bar{V}}{\bar{I}} = \frac{V\angle 0°}{I\angle -90°} = \frac{V}{-jI} = j\omega L = 0 + jX_L = X_L\angle 90° = \omega L\angle 90°$$

where, the inductive reactance is $X_L = \omega L = 2\pi f L$.

Note that the current lags the voltage by $\phi = +90°$. This can be observed both from phasor diagram (Fig. 14.2b), and waveforms (Fig. 14.2c). As the circuit has no resistance, but only inductive reactance $X_L = \omega L$ (positive, as per convention), the impedance Z is only in the y-axis (imaginary).

3. Purely capacitive circuit (C only)

The current i, in the circuit (Fig. 14.3a), is,

$$i = C\frac{dv}{dt}$$

Substituting $v = \sqrt{2}V\sin\omega t = V_m \sin\omega t$, i is

$$i = C\frac{d}{dt}\left(\sqrt{2}V\sin\omega t\right) = \sqrt{2}\,\omega CV\cos\omega t = \sqrt{2}\,\omega CV\sin(\omega t + 90°) = \sqrt{2}\,I\sin(\omega t + 90°)$$

$$= I_m \sin(\omega t + 90°)$$

The rms value, I is

$$\bar{I} = \omega C\bar{V} = \frac{\bar{V}}{1/(\omega C)} = I\angle 90°$$

$$\bar{V} = V\angle 0° = V + j0 \quad ; \qquad \bar{I} = I\angle 90° = 0 + jI$$

The impedance of the circuit is

$$Z\angle\phi = \frac{\bar{V}}{\bar{I}} = \frac{V\angle 0°}{I\angle 90°} = \frac{V}{jI} = \frac{1}{j\omega C} = -\frac{j}{\omega C} = 0 - jX_C = X_C\angle -90° = \frac{1}{\omega C}\angle 90°$$

where, the capacitive reactance is $X_C = \frac{1}{\omega C} = \frac{1}{2\pi f C}$.

Note that the current leads the voltage by $\phi = 90°$ (this value is negative, i.e. $\phi = -90°$), as per convention being followed here. This can be observed both from phasor diagram (Fig. 14.3b), and waveforms (Fig. 14.3c). As the circuit has no resistance, but only capacitive reactance, $X_c = 1/(\omega C)$ (negative, as per convention), the impedance Z is only in the y-axis (imaginary).

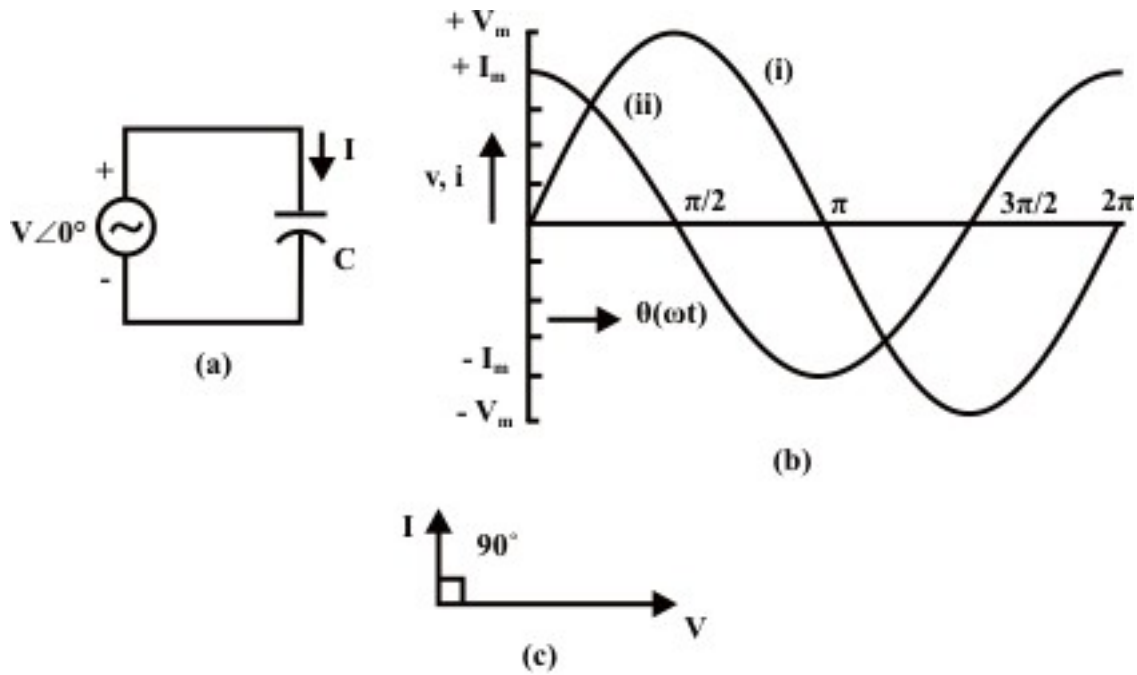

Fig. 14.3: Circuit with Capacitance (C)
(a) Circuit diagram
(b) Waveforms: (i) Voltage (ii) Current
(c) Phasor diagram

Series Circuits

1. Inductive circuit (R and L in series)

The voltage balance equation for the R-L series circuit (Fig. 14.4a) is,

$$v = Ri + L\frac{di}{dt}$$

where, $v = \sqrt{2}V\sin\omega t = V_m \sin\omega t = \sqrt{2}V\sin\theta$, θ being ωt.

The current, i (in steady state) can be found as

$$i = \sqrt{2}\,I\sin(\omega t - \phi) = I_m \sin(\omega t - \phi) = \sqrt{2}\,I\sin(\theta - \phi)$$

The current, $i(t)$ in steady state is sinusoidal in nature (neglecting transients of the form shown in the earlier module on dc transients). This can also be observed, if one sees the expression of the current, $i = I_m \sin(\omega t)$ for purely resistive case (with R only), and $i = I_m \sin(\omega t - 90°)$ for purely inductive case (with L only).

Alternatively, if the expression for i is substituted in the voltage equation, the equation as given here is obtained.

$$\sqrt{2}V\sin\omega t = R\cdot\sqrt{2}\,I\sin(\omega t - \phi) + \omega L\cdot\sqrt{2}\,I\cos(\omega t - \phi)$$

If, first, the trigonometric forms in the RHS side is expanded in terms of $\sin\omega t$ and $\cos\omega t$, and then equating the terms of $\sin\omega t$ and $\cos\omega t$ from two (LHS & RHS) sides, the two equations as given here are obtained.

$V = (R\cdot\cos\phi + \omega L\cdot\sin\phi)\cdot I$, and

$0 = (-R \cdot \sin\phi + \omega L \cdot \cos\phi)$

From these equations, the magnitude and phase angle of the current, I are derived.

From the second one, $\tan\phi = (\omega L / R)$

So, phase angle, $\phi = \tan^{-1}(\omega L / R)$

Two relations, $\cos\phi = (R / Z)$, and $\sin\phi = (\omega L / Z)$, are derived, with the term (impedance), $Z = \sqrt{R^2 + (\omega L)^2}$

If these two expressions are substituted in the first one, it can be shown that the magnitude of the current is $I = V / Z$, with both V and Z in magnitude only.

The steps required to find the rms value of the current I, using complex form of impedance, are given here.

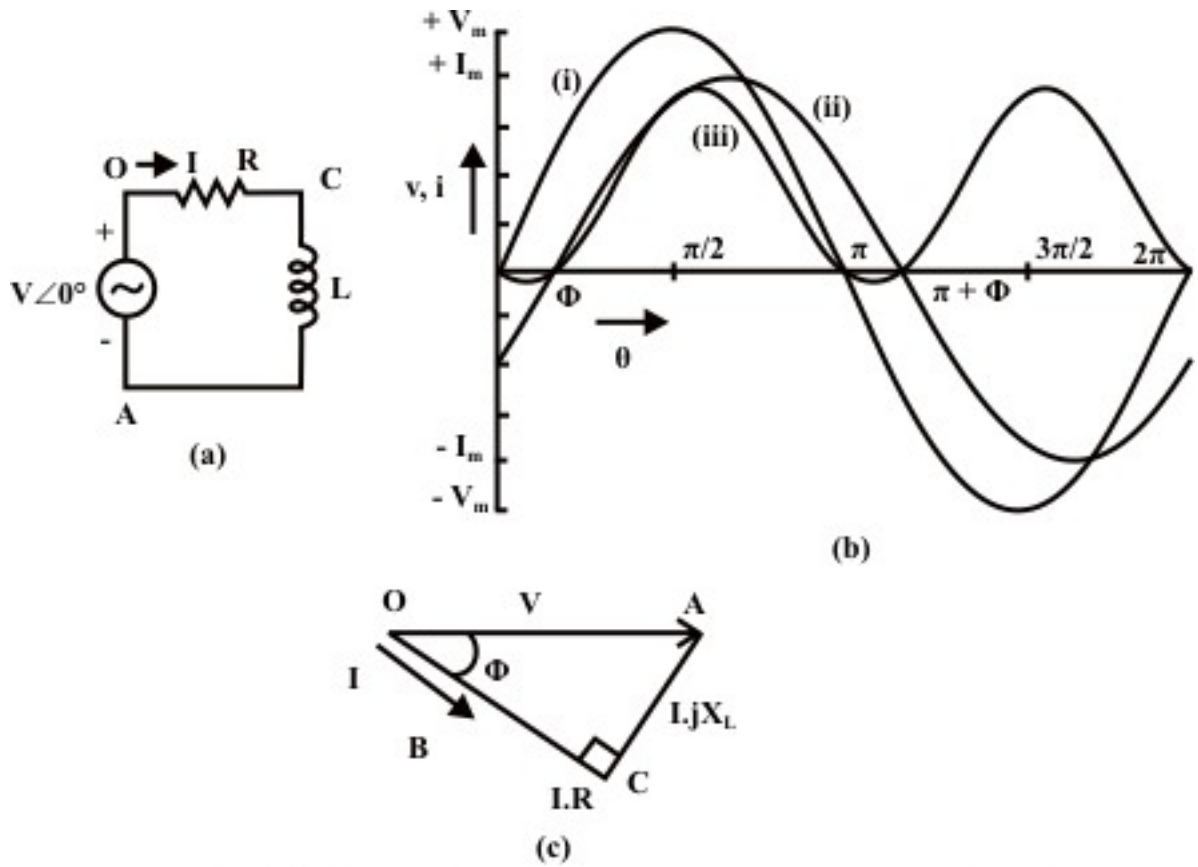

Fig. 14.4: Circuit with Resistance (R) and Inductance (L) in series.
(a) Circuit diagram
(b) Waveforms: (i) Voltage (ii) Current (iii) Power
(c) Phasor diagram

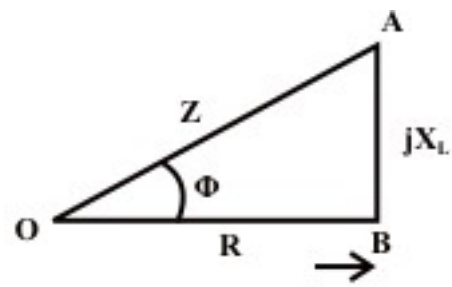

Fig. 14.5: The complex form of the impedance (R-L series circuit)

The impedance (Fig. 14.5) of the inductive (R-L) circuit is,

$Z\angle\phi = R + j\,X_L = R + j\,\omega\,L$

where,

$$Z = \sqrt{R^2 + X_L^2} = \sqrt{R^2 + (\omega\,L)^2} \quad \text{and} \quad \phi = \tan^{-1}\left(\frac{X_L}{R}\right) = \tan^{-1}\left(\frac{\omega\,L}{R}\right)$$

$$\bar{I}\ \angle -\phi = \frac{V\angle 0^\circ}{Z\angle\phi} = \frac{V + j\,0}{R + j\,X_L} = \frac{V + j\,0}{R + j\,\omega\,L}$$

$$I = \frac{V}{Z} = \frac{V}{\sqrt{R^2 + X_L^2}} = \frac{V}{\sqrt{R^2 + (\omega\,L)^2}}$$

Note that the current lags the voltage by the angle ϕ, value as given above. In this case, the voltage phasor has been taken as reference phase, with the current phasor lagging the voltage phasor by the angle, ϕ. But normally, in the case of the series circuit, the current phasor is taken as reference phase, with the voltage phasor leading the current phasor by ϕ. This can be observed both from phasor diagram (Fig. 14.4b), and waveforms (Fig. 14.4c). The inductive reactance X_L is positive. In the phasor diagram, as one move from voltage phasor to current phasor, one has to go in the <u>clockwise</u> direction, which means that phase angle, ϕ is taken as positive, though both phasors are assumed to move in anticlockwise direction as shown in the previous lesson.

The complete phasor diagram is shown in Fig. 14.4b, with the voltage drops across the two components and input (supply) voltage (OA), and also current (OB). The voltage phasor is taken as reference. It may be observed that

$V_{OC}\,(= I\,R) + V_{CA}\,[= I\,(j\,X_L)] = V_{OA}\,(= I\,Z)$,

using the Kirchoff's second law relating to the voltage in a closed loop. The phasor diagram can also be drawn with the current phasor as reference, as will be shown in the next lesson.

Power consumed and Power factor

From the waveform of instantaneous power ($W = v \cdot i$) also shown in Fig. 14.4c for the above circuit, the average power is,

$$W = \frac{1}{\pi}\int_0^{\pi} v \cdot i \, d\theta = \frac{1}{\pi}\int_0^{\pi} \sqrt{2}\, V \sin\theta \sqrt{2}\, I \sin(\theta - \phi)\, d\theta = \frac{1}{\pi}\int_0^{\pi} V\, I \left[\cos\phi - \cos(2\theta - \phi)\right] d\theta$$

$$= \frac{1}{\pi}\left[V\, I \cos\phi\, \theta \Big|_0^{\pi} - \frac{V\, I}{2} \sin(2\theta - \phi)\Big|_0^{\pi} \right]$$

$$= \frac{1}{\pi}\left[V\, I \cos\phi\, (\pi - 0) - \frac{V\, I}{2}\left[\sin(2\pi - \phi) + \sin\phi\right] \right] = V\, I \cos\phi$$

Note that power is only consumed in resistance, R only, but not in the inductance, L. So, $W = I^2 R$.

$$\text{Power factor} = \frac{average\ power}{apparent\ power} = \frac{V\, I \cos\phi}{V\, I} = \cos\phi = \frac{R}{Z} = \frac{R}{\sqrt{R^2 + (\omega L)^2}}$$

The power factor in this circuit is less than 1 (one), as $0° \le \phi \le 90°$, ϕ being positive as given above.

For the resistive (R) circuit, the power factor is 1 (one), as $\phi = 0°$, and the average power is $V\, I$.

For the circuits with only inductance, L or capacitance, C as described earlier, the power factor is 0 (zero), as $\phi = \pm 90°$. For inductance, the phase angle, or the angle of the impedance, $\phi = +90°$ (lagging), and for capacitance, $\phi = -90°$ (leading). It may be noted that in both cases, the average power is zero (0), which means that no power is consumed in the elements, L and C.

The complex power, Volt-Amperes (VA) and reactive power will be discussed after the next section.

2. Capacitive circuit (R and C in series)

This part is discussed in brief. The voltage balance equation for the R-C series circuit (Fig. 14.6a) is,

$$v = R\, i + \frac{1}{C}\int i\, dt = \sqrt{2}\, V \sin\omega t$$

The current is

$$i = \sqrt{2}\, I \sin(\omega t + \phi)$$

The reasons for the above choice of the current, i, and the steps needed for the derivation of the above expression, have been described in detail, in the case of the earlier example of inductive (R-L) circuit. The same set of steps has to be followed to derive the current, i in this case.

Alternatively, the steps required to find the rms value of the current I, using complex form of impedance, are given here.

The impedance of the capacitive (R-C) circuit is,

$$Z\angle -\phi = R - j\, X_C = R - j\frac{1}{\omega C}$$

where,

$$Z = \sqrt{R^2 + X_C^2} = \sqrt{R^2 + \left(\frac{1}{\omega C}\right)^2} \quad \text{and}$$

$$\phi = \tan^{-1}\left(-\frac{X_C}{R}\right) = \tan^{-1}\left(-\frac{1}{\omega C R}\right) = -\tan^{-1}\left(\frac{1}{\omega C R}\right)$$

$$\bar{I} \angle\phi = \frac{V\angle 0°}{Z\angle -\phi} = \frac{V + j0}{R - jX_C} = \frac{V + j0}{R - j(1/\omega C)}$$

$$I = \frac{V}{Z} = \frac{V}{\sqrt{R^2 + X_C^2}} = \frac{V}{\sqrt{R^2 + (1/\omega C)^2}}$$

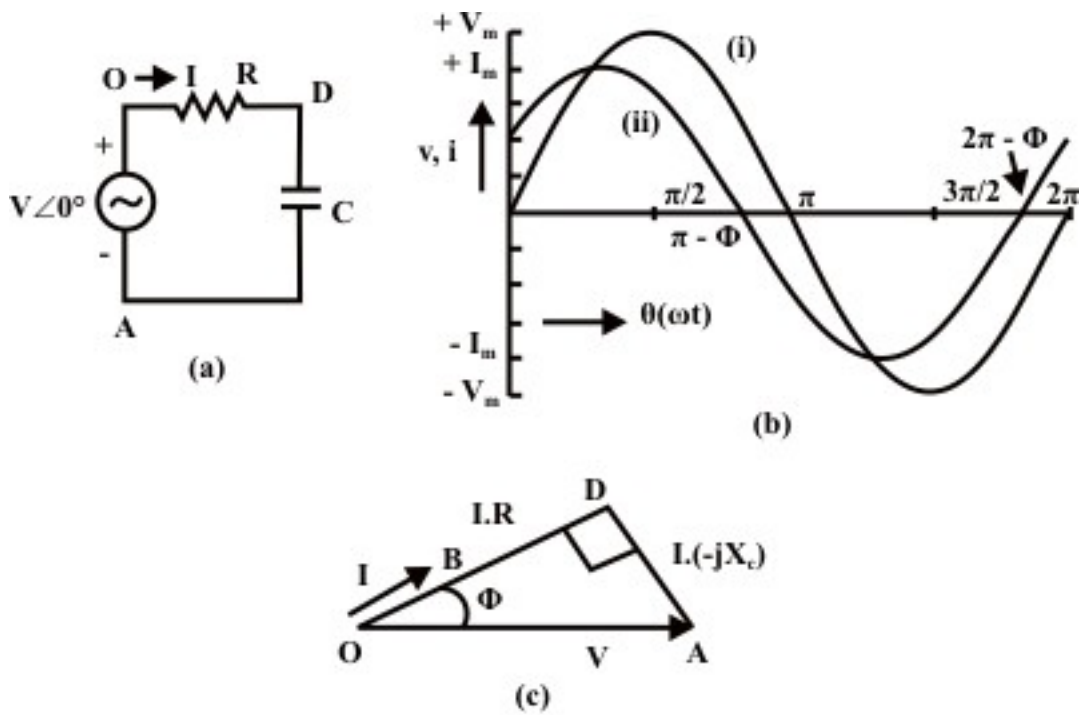

Fig. 14.6: Circuit with Resistance (R) and Capacitance (C) in series.
(a) Circuit diagram
(b) Waveforms: (i) Voltage (ii) Current
(c) Phasor diagram

Note that the current leads the voltage by the angle ϕ, value as given above. In this case, the voltage phasor has been taken as reference phase, with the current phasor leading the voltage phasor by the angle, ϕ. But normally, in the case of the series circuit, the current phasor is taken as reference phase, with the voltage phasor lagging the current phasor by ϕ. This can be observed both from phasor diagram (Fig. 14.6b), and waveforms (Fig. 14.6c). The capacitive reactance X_C is negative. In the phasor diagram, as one move from voltage phasor to current phasor, one has to go in the anticlockwise direction, which means that phase angle, ϕ is taken as negative. This is in contrast to the case as described earlier. The complete phasor diagram is shown in Fig. 14.6b, with the voltage drops across the two components and input (supply) voltage, and also current. The voltage phasor is taken as reference.

The power factor in this circuit is less than 1 (one), with ϕ being same as given above. The expression for the average power is $P = V\,I\cos\phi$, which can be obtained by the method shown above. The power is only consumed in the resistance, R, but not in the capacitance, C. One example is included after the next section.

Complex Power, Volt-Amperes (VA) and Reactive Power

The complex power is the product of the voltage and complex conjugate of the current, both in phasor form. For the inductive circuit, described earlier, the voltage ($V\angle 0°$) is taken as reference and the current ($I\angle -\phi = I\cos\phi - j\,I\sin\phi$) is lagging the voltage by an angle, ϕ. The complex power is

$$\bar{S} = \bar{V}\cdot I^* = V\angle 0°\cdot I\angle\phi = (V\,I)\angle\phi = V\,I\cos\phi + jV\,I\sin\phi = P + jQ$$

The Volt-Amperes (S), a scalar quantity, is the product of the magnitudes the voltage and the current. So, $S = V\cdot I = \sqrt{P^2 + Q^2}$. It is expressed in VA.

The active power (W) is

$P = \text{Re}\,(\bar{S}) = \text{Re}\,(\bar{V}\cdot I^*) = V\,I\cos\phi$, as derived earlier.

The reactive power (VAr) is given by $Q = \text{Im}\,(\bar{S}) = \text{Im}\,(\bar{V}\cdot I^*) = V\,I\sin\phi$.

As the phase angle, ϕ is taken as positive in inductive circuits, the reactive power is positive. The real part, ($I\cos\phi$) is in phase with the voltage V, whereas the imaginary part, $I\sin\phi$ is in quadrature ($-90°$) with the voltage V. But in capacitive circuits, the current ($I\angle\phi$) leads the voltage by an angle ϕ, which is taken as negative. So, it can be stated that the reactive power is negative here, which can easily be derived

Example 14.1

A voltage of 120 V at 50 Hz is applied to a resistance, R in series with a capacitance, C (Fig. 14.7a). The current drawn is 2 A, and the power loss in the resistance is 100 W. Calculate the resistance and the capacitance.

Solution

$V = 120$ V $\quad I = 2$ A $\quad P = 100$ W $\quad f = 50$ Hz

$$R = P / I^2 = 100/2^2 = 25\ \Omega$$

$$Z = \sqrt{R^2 + X_C^2} = V / I = 120/2 = 60\ \Omega$$

$$X_c = 1/(2\pi\ f\ C) = \sqrt{Z^2 - R^2} = \sqrt{(60)^2 - (25)^2} = 54.54\,\Omega$$

$$C = \frac{1}{2\pi\ f\ X_C} = \frac{1}{2\pi \cdot 50.0 \times 54.54} = 58.36 \cdot 10^{-6} = 58.36\ \mu F$$

The power factor is, $\cos\phi = R / Z = 25/60 = 0.417\ (lead)$

The phase angle is $\phi = \cos^{-1}(0.417) = 65.38°$

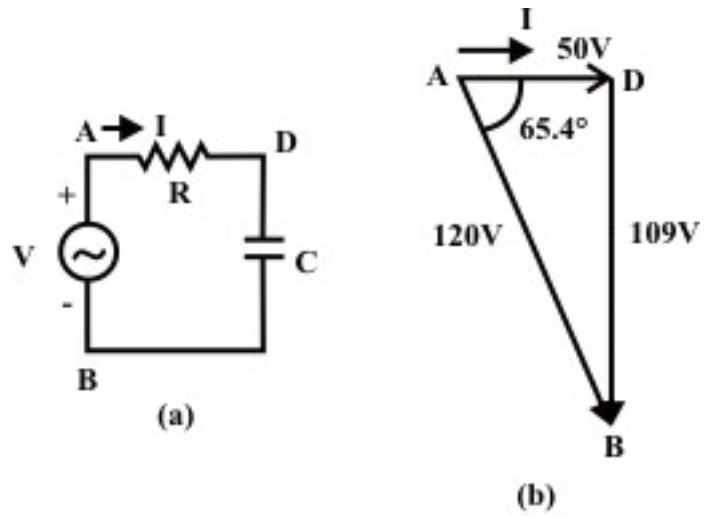

Fig. 14.7: (a) Circuit diagram
(b) Phasor diagram

The phasor diagram, with the current as reference, is shown in Fig. 14.7b. The examples, with lossy inductance coil (r in series with L), will be described in the next lesson. The series circuit with all elements, R. L & C, along with parallel circuits, will be taken up in the next lesson.

Problems

14.1 Calculate the power factor in the following cases for the circuit with the elements, as given, fed from a single phase ac supply.

(i) With resistance, R only, but no L and C

(a) 1.0 (Φ=0°) (b) 0.0 lagging (Φ=+90°)

(c) 0.0 leading (Φ=-90°) (d) None of the above

(ii) with only pure/lossless inductance, L, but no R and C

(a) 1.0 (Φ=0°) (b) 0.0 lagging (Φ=+90°)

(c) 0.0 leading (Φ=-90°) (d) None of the above

(iii) with only pure capacitance, C, but no R and L.

(a) 1.0 (Φ=0°) (b) 0.0 lagging (Φ=+90°)

(c) 0.0 leading (Φ=-90°) (d) None of the above

14.2 Calculate the current and power factor (lagging / leading) in the following cases for the circuits having impedances as given, fed from an ac supply of 200 V. Also draw the phasor diagram in all cases.

(i) $Z = (15+j20)\ \Omega$

(ii) $Z = (14-j14)\ \Omega$

(iii) $Z = R + j\,(X_L - X_C)$, where $R = 10\ \Omega$, $X_L = 20\ \Omega$, and $X_C = 10\ \Omega$.

14.3 A 200 V, 50 Hz supply is connected to a resistance (R) of 20 Ω in series with an iron cored choke coil (r in series with L). The readings of the voltmeters across the resistance and across the coil are 120 V and 150 V respectively. Find the loss in the coil. Also find the total power factor. Draw the phasor diagram.

14.4 A circuit, with a resistance, R and a lossless inductance in series, is connected across an ac supply (V) of known frequency (f). A capacitance, C is now connected in series with R-L, with V and f being constant. Justify the following statement with reasons.

The current in the circuit normally increases with the introduction of C.

Under what condition, the current may also decrease. Explain the condition with reasons.

List of Figures

Fig. 14.1 Resistive (R) load, connected to single phase ac supply

(a) Circuit diagram (b) Phasor diagram

(c) Waveforms – 1. Voltage (v), 2. Current (i)

Fig. 14.2 Load – Inductance (L) only

(a) Circuit diagram (b) Phasor diagram

(c) Waveforms – 1. Voltage (v), 2. Current (i)

Fig. 14.3 Load – Capacitance (C) only

(a) Circuit diagram (b) Phasor diagram

(c) Waveforms – 1. Voltage (v), 2. Current (i)

Fig. 14.4 Load – Inductive (R and L in series)

(a) Circuit diagram (b) Phasor diagram

(c) Waveforms – 1. Voltage (v), 2. Current (i),

3. Instantaneous power (W = v·i)

Fig. 14.5 The complex form of the impedance (R-L series circuit)

Fig. 14.6 Load – Capacitive (R and C in series)

(a) Circuit diagram (b) Phasor diagram

(c) Waveforms – 1. Voltage (v), 2. Current (i),

Fig. 14.7 (a) Circuit diagram (Ex. 14.1) (b) Phasor diagram

Module 4

Single-phase AC circuits

Lesson 15

Solution of Current in AC Series and Parallel Circuits

In the last lesson, two points were described:

1. How to solve for the impedance, and current in an ac circuit, consisting of single element, R / L / C?
2. How to solve for the impedance, and current in an ac circuit, consisting of two elements, R and L / C, in series, and then draw complete phasor diagram?

In this lesson, the solution of currents in simple circuits, consisting of resistance R, inductance L and/or capacitance C connected in series, fed from single phase ac supply, is presented. Then, the circuit with all above components in parallel is taken up. The process of drawing complete phasor diagram with current(s) and voltage drops in the different components is described. The computation of total power and also power consumed in the different components, along with power factor, is explained. One example of series circuit are presented in detail, while the example of parallel circuit will be taken up in the next lesson.

Keywords: Series and parallel circuits, impedance, admittance, power, power factor.

After going through this lesson, the students will be able to answer the following questions;

1. How to compute the total reactance and impedance / admittance, of the series and parallel circuits, fed from single phase ac supply?
2. How to compute the different currents and also voltage drops in the components, both in magnitude and phase, of the circuit?
3. How to draw the complete phasor diagram, showing the currents and voltage drops?
4. How to compute the total power and also power consumed in the different components, along with power factor?

Solution of Current in R-L-C Series Circuit

Series (R-L-C) circuit

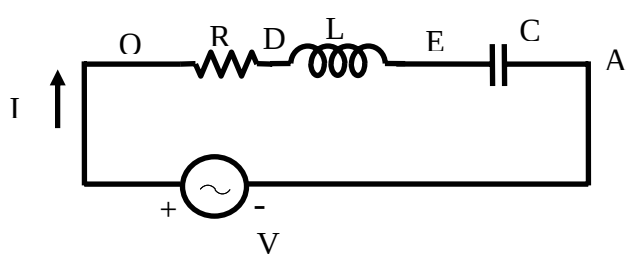

Fig. 15.1 (a) Circuit diagram

The voltage balance equation for the circuit with R, L and C in series (Fig. 15.1a), is

$$v = R\,i + L\frac{di}{dt} + \frac{1}{C}\int i\,dt = \sqrt{2}\,V\sin\omega t$$

The current, i is of the form,

$i = \sqrt{2}\, I \sin(\omega t \pm \phi)$

As described in the previous lesson (#14) on series (R-L) circuit, the current in steady state is sinusoidal in nature. The procedure given here, in brief, is followed to determine the form of current. If the expression for $i = \sqrt{2}\, I \sin(\omega t - \phi)$ is substituted in the voltage equation, the equation shown here is obtained, with the sides (LHS & RHS) interchanged.

$$R \cdot \sqrt{2}\, I \sin(\omega t - \phi) + \omega L \cdot \sqrt{2}\, I \cos(\omega t - \phi) - (1/\omega C) \cdot \sqrt{2}\, I \cos(\omega t - \phi)$$

$$= \sqrt{2}\, V \sin \omega t$$

or $\quad R \cdot \sqrt{2}\, I \sin(\omega t - \phi) + [\omega L - (1/\omega C)] \cdot \sqrt{2}\, I \cos(\omega t - \phi) = \sqrt{2}\, V \sin \omega t$

The steps to be followed to find the magnitude and phase angle of the current I, are same as described there (#14).

So, the phase angle is $\phi = \tan^{-1}[\omega L - (1/\omega C)]/R$

and the magnitude of the current is $I = V/Z$

where the impedance of the series circuit is $Z = \sqrt{R^2 + [\omega L - (1/\omega C)]^2}$

Alternatively, the steps to find the rms value of the current I, using complex form of impedance, are given here.

The impedance of the circuit is

$$Z\angle \pm \phi = R + j(X_L - X_C) = R + j\left(\omega L - \frac{1}{\omega C}\right)$$

where,

$$Z = \sqrt{R^2 + (X_L - X_C)^2} = \sqrt{R^2 + \left(\omega L - (1/\omega C)\right)^2} \text{ , and}$$

$$\phi = \tan^{-1}\left(\frac{X_L - X_C}{R}\right) = \tan^{-1}\left(\frac{\omega L - (1/\omega C)}{R}\right)$$

$$\bar{I}\ \angle \mp \phi = \frac{\bar{V}\angle 0^\circ}{Z\angle \pm \phi} = \frac{V + j0}{R + j(X_L - X_C)} = \frac{V + j0}{R + j\left(\omega L - (1/\omega C)\right)}$$

$$I = \frac{V}{Z} = \frac{V}{\sqrt{R^2 + (X_L - X_C)^2}} = \frac{V}{\sqrt{R^2 + \left(\omega L - \frac{1}{\omega C}\right)^2}}$$

Two cases are: (a) Inductive $\left(\omega L > \frac{1}{\omega C}\right)$, and (b) Capacitive $\left(\omega L < \frac{1}{\omega C}\right)$.

(a) Inductive

In this case, the circuit is inductive, as total reactance $\left(\omega L - (1/\omega C)\right)$ is positive, under the condition $\left(\omega L > (1/\omega C)\right)$. The current lags the voltage by ϕ (taken as positive), with the voltage phasor taken as reference. The power factor (lagging) is less than 1 (one), as $0^\circ \le \phi \le 90^\circ$. The complete phasor diagram, with the voltage drops across the

components and input voltage (OA), and also current (OB), is shown in Fig. 15.1b. The voltage phasor is taken as reference, in all cases. It may be observed that

$$V_{OC}(=i\,R)+V_{CD}[=i(j\,X_L)]+V_{DA}[=-i(j\,X_C)]=V_{OA}(=i\,Z)$$

using the Kirchoff's second law relating to the voltage in a closed loop. The phasor diagram can also be drawn with the current phasor as reference, as will be shown in the example given here. The expression for the average power is $V\,I\cos\phi = I^2 R$. The power is only consumed in the resistance, R, but not in inductance/capacitance (L/C), in all three cases.

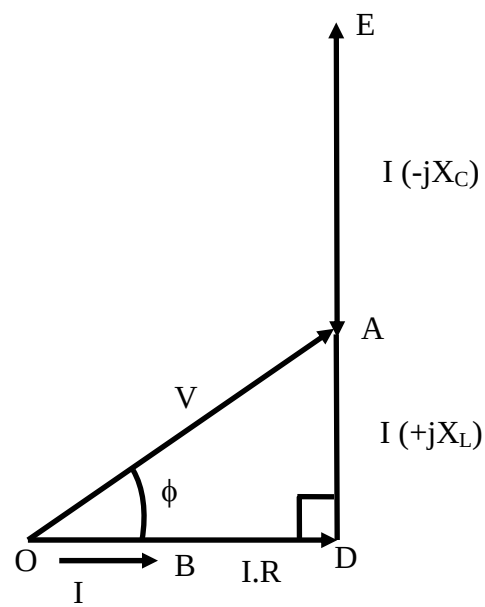

Inductive ($X_L > X_C$)
Fig 15.1 (b) Phasor diagram

In this case, the circuit is inductive, as total reactance $(\omega L-(1/\omega C))$ is positive, under the condition $(\omega L>(1/\omega C))$. The current lags the voltage by ϕ (positive). The power factor (lagging) is less than 1 (one), as $0°\le\phi\le 90°$. The complete phasor diagram, with the voltage drops across the components and input voltage (OA), and also current (OB), is shown in Fig. 15.1b. The voltage phasor is taken as reference, in all cases. It may be observed that

$$V_{OC}(=i\,R)+V_{CD}[=i(j\,X_L)]+V_{DA}[=-i(j\,X_C)]=V_{OA}(=i\,Z)$$

using the Kirchoff's second law relating to the voltage in a closed loop. The phasor diagram can also be drawn with the current phasor as reference, as will be shown in the example given here. The expression for the average power is $V\,I\cos\phi = I^2 R$. The power is only consumed in the resistance, R, but not in inductance/capacitance (L/C), in all three cases.

(b) Capacitive

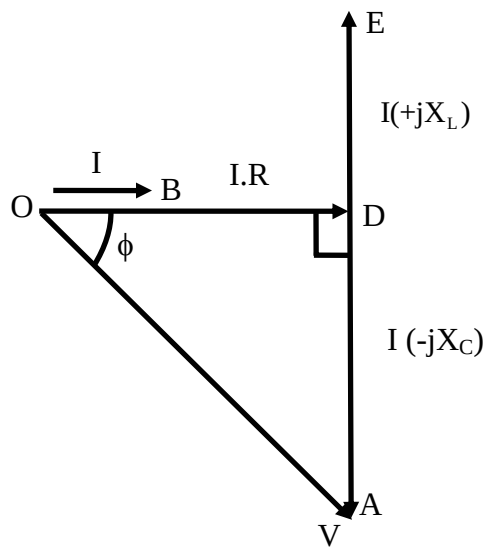

Capacitive ($X_L < X_C$)
Fig 15.1 (c) Phasor diagram

The circuit is now capacitive, as total reactance $\left(\omega L - (1/\omega C)\right)$ is negative, under the condition $\left(\omega L < (1/\omega C)\right)$. The current leads the voltage by ϕ, which is negative as per convention described in the previous lesson. The voltage phasor is taken as reference here. The complete phasor diagram, with the voltage drops across the components and input voltage, and also current, is shown in Fig. 15.1c. The power factor (leading) is less than 1 (one), as $0° \le \phi \le 90°$, ϕ being negative. The expression for the average power remains same as above.

The third case is resistive, as total reactance $(\omega L - 1/\omega C)$ is zero (0), under the condition $(\omega L = 1/\omega C)$. The impedance is $Z\angle 0° = R + j0$. The current is now at unity power factor ($\phi = 0°$), i.e. the current and the voltage are in phase. The complete phasor diagram, with the voltage drops across the components and input (supply) voltage, and also current, is shown in Fig. 15.1d. This condition can be termed as 'resonance' in the series circuit, which is described in detail in lesson #17. The magnitude of the impedance in the circuit is minimum under this condition, with the magnitude of the current being maximum. One more point to be noted here is that the voltage drops in the inductance, L and also in the capacitance, C, is much larger in magnitude than the supply voltage, which is same as the voltage drop in the resistance, R. The phasor diagram has been drawn approximately to scale.

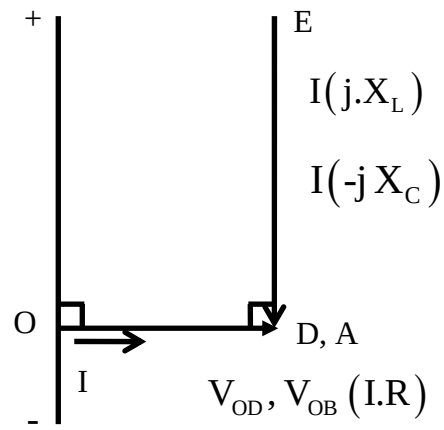

Resistive ($X_L = X_C$)

Fig. 15.1 (d) Phasor diagram

It may be observed here that two cases of series (R-L & R-C) circuits, as discussed in the previous lesson, are obtained in the following way. The first one (inductive) is that of (a), with C very large, i.e.$1/\omega C \approx 0$, which means that C is not there. The second one (capacitive) is that of (b), with L not being there (L or $\omega L = 0$).

Example 15.1

A resistance, R is connected in series with an iron-cored choke coil (r in series with L). The circuit (Fig. 15.2a) draws a current of 5 A at 240 V, 50 Hz. The voltages across the resistance and the coil are 120 V and 200 V respectively. Calculate,

(a) the resistance, reactance and impedance of the coil,
(b) the power absorbed by the coil, and
(c) the power factor (pf) of the input current.

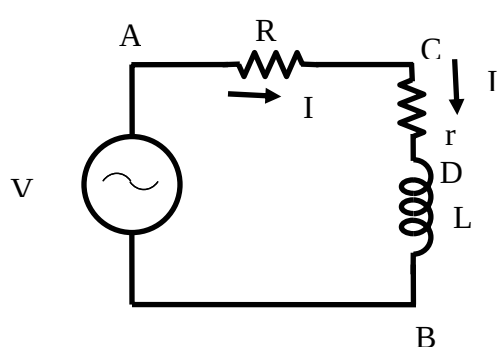

Fig. 15.2 (a) Circuit diagram

Solution

$I\,(OB) = 5$ A $\quad V_S\,(OA) = 240$ V $\quad f = 50$ Hz $\quad \omega = 2\pi f$

The voltage drop across the resistance $V_1\,(OC) = I \cdot R = 120\ V$

The resistance, $R = V_1 / I = 120/5 = 24\ \Omega$

The voltage drop across the coil $V_2\ (CA) = I \cdot Z_L = 200\ V$

The impedance of the coil, $Z_L = \sqrt{r^2 + X_L^2} = V_2 / I = 200/5 = 40\ \Omega$

From the phasor diagram (Fig. 15.2b),

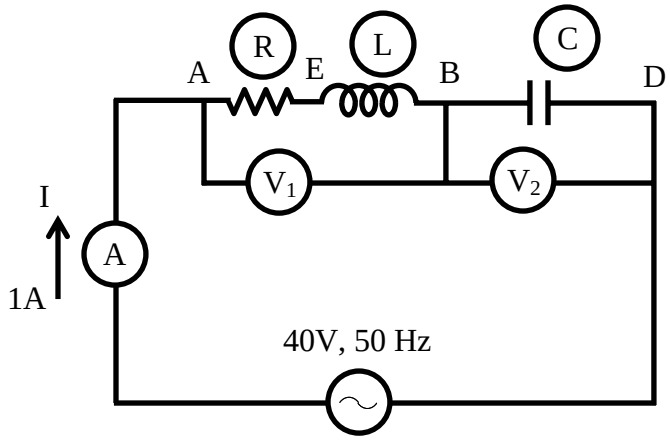

Fig. 15.2(b): Phasor Diagram

$$\cos\phi = \cos\angle AOC = \frac{OA^2 + OC^2 - CA^2}{2 \cdot OA \cdot OC} = \frac{(120)^2 + (240)^2 - (200)^2}{2 \times 120 \times 240} = \frac{32{,}000}{57{,}600}$$

$= 0.556$

The power factor (pf) of the input current = $\cos\phi = 0.556\ (lag)$

The phase angle of the total impedance, $\phi = \cos^{-1}(0.556) = 56.25°$

Input voltage, $V_S\ (OA) = I \cdot Z = 240\ V$

The total impedance of the circuit, $Z = \sqrt{(R+r)^2 + X_L^2} = V_S / I = 240/5 = 48\ \Omega$

$Z \angle\phi = (R+r) + j\,X_L = 48\ \angle 56.25° = (26.67 + j\,39.91)\ \Omega$

The total resistance of the circuit, $R + r = 24 + r = 26.67\ \Omega$

The resistance of the coil, $r = 26.67 - 24.0 = 2.67\ \Omega$

The reactance of the coil, $X_L = \omega L = 2\,\pi\,f\,L = 39.9\ \Omega$

The inductance of the coil, $L = \dfrac{X_L}{2\pi f} = \dfrac{39.9}{2\pi \times 50} = 0.127\,H = 127 \cdot 10^{-3} = 127\ mH$

The phase angle of the coil,

$\phi_L = \cos^{-1}(r / Z_L) = \cos^{-1}(2.67/40.0) = \cos^{-1}(0.067) = 86.17°$

$Z_L \angle\phi_L = r + j\,X_L = (2.67 + j\ 39.9) = 40\ \angle 86.17°7)\ \Omega$

The power factor (pf) of the coil, $\cos\phi\ = 0.067\ (lag)$

The copper loss in the coil $= I^2 r = 5^2 \times 2.67 = 66.75\ W$

Example 15.2

An inductive coil, having resistance of 8 Ω and inductance of 80 mH, is connected in series with a capacitance of 100 μF across 150 V, 50 Hz supply (Fig. 15.3a). Calculate, (a) the current, (b) the power factor, and (c) the voltages drops in the coil and capacitance respectively.

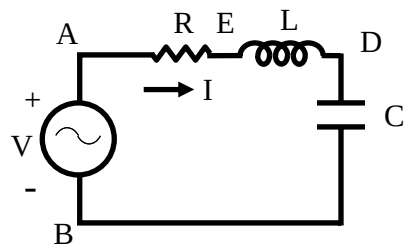

Fig. 15.3 (a) Circuit diagram

Solution

f = 50 Hz $\qquad \omega = 2\pi f = 2\pi \times 50 = 314.16\ rad/s$

L = 80 $mH = 80 \cdot 10^{-3} = 0.08\,H \qquad X_l = \omega L = 314.16 \times 0.08 = 25.13\ \Omega$

C = 100 $\mu F = 100 \cdot 10^{-6}\ F \qquad X_C = \dfrac{1}{\omega C} = \dfrac{1}{314.16 \times 100 \cdot 10^{-6}} = 31.83\ \Omega$

R = 8 $\Omega \qquad V_S\,(OA) = 150\ V$

The impedance of the coil, $Z_L \angle \phi_L = R + j\,X_L = (8.0 + j\,25.13) = 26.375 \angle 72.34°\ \Omega$

The total impedance of the circuit,

$Z \angle -\phi = R + j\,(X_L - X_{C4}) = 8.0 + j\,(25.13 - 31.83) = (8.0 - j\,6.7)$

$= 10.435 \angle -39.95°\ \Omega$

The current drawn from the supply,

$$I \angle \phi = \frac{V \angle 0°}{Z \angle -\phi} = \left(\frac{150}{10.435}\right) \angle 39.95° = 14.375\ \angle 39.95°\ A = (11.02 + j\,9.26)\ A$$

The current is, $I = 14.375\ A$

The power factor (pf) $= \cos\,\phi = \cos\,39.95° = 0.767\ (lead)$

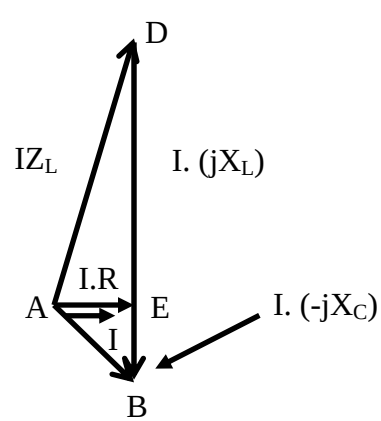

Fig. 15.3 (b) Phasor diagram

Please note that the current phasor is taken as reference in the phasor diagram (Fig. 15.3b) and also here. The voltage drop in the coil is,

$V_1 \angle\theta_1 = I \angle 0° \cdot Z_L \angle\phi_L = (14.375 \times 26.375) \angle 72.34° = 379.14 \angle 72.34°\ V$

$= (115.1 + j\,361.24)\ V$

The voltage drop in the capacitance in,

$V_2 \angle\theta_2 = I \angle 0° \cdot Z_C \angle -\phi_C = (14.475 \times 31.83) \angle -90.0° = 457.58 \angle -90.0°\ V$

$= -j\,457.58\ V$

Solution of Current in Parallel Circuit

Parallel circuit

The circuit with all three elements, R, L & C connected in parallel (Fig. 15.4a), is fed to the ac supply. The current from the supply can be computed by various methods, of which two are described here.

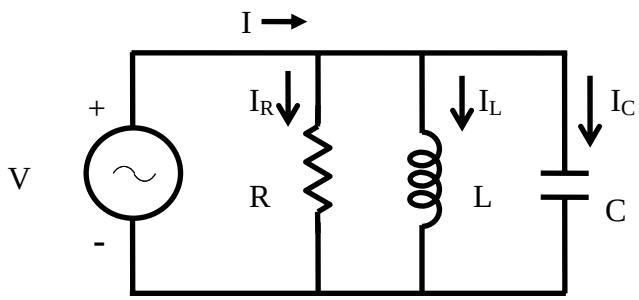

Fig. 15.4 (a) Circuit diagram.

First method

The current in three branches are first computed and the total current drawn from the supply is the phasor sum of all three branch currents, by using Kirchoff's first law related to the currents at the node. The voltage phasor (V) is taken as reference.

All currents, i.e. three branch currents and total current, in steady state, are sinusoidal in nature, as the input (supply voltage is sinusoidal of the form,

$v = \sqrt{2}\ V \sin\omega t$

Three branch currents are obtained by the procedure given in brief.

$v = R \cdot i_R$, or $i_R = v / R = \sqrt{2}\ (V / R)\ \sin\ \omega\, t = \sqrt{2}\, I_R \sin\ \omega\, t$,

where, $|I_R| = |(V / R)|$

Similarly, $v = L \dfrac{d\, i_L}{dt}$

So, i_L is,

$i_L = (1/L) \int v\ dt = (1/L) \int \sqrt{2}\ V(\sin\omega t)\ dt = -\sqrt{2}\,[V/(\omega L)] \cos\omega t = -\sqrt{2}\, I_L \cos\omega t$

$= \sqrt{2}\, I_L \sin(\omega t - 90°)$

where, $|I_L| = |(V/X_L)|$ with $X_L = \omega L$

$v = (1/C)\int i_C\, dt$, from which i_C is obtained as,

$$i_C = C\frac{dv}{dt} = C\frac{d}{dt}(\sqrt{2}\, V\sin\omega t) = \sqrt{2}\,(V\cdot\omega C)\cos\omega t = \sqrt{2}\, I_C\cos\omega t$$

$$= \sqrt{2}\, I_C \sin(\omega t + 90°)$$

where, $|I_c| = |(V/X_C)|$ with $X_C = (1/\omega C)$

Total (supply) current, i is

$$i = i_R + i_L + i_C = \sqrt{2}\, I_R \sin\omega t - \sqrt{2}\, I_L \cos\omega t + \sqrt{2}\, I_C \cos\omega t$$

$$= \sqrt{2}\, I_R \sin\omega t - \sqrt{2}\,(I_L - I_C)\cos\omega t = \sqrt{2}\, I \sin(\omega t \mp \phi)$$

The two equations given here are obtained by expanding the trigonometric form appearing in the last term on RHS, into components of $\cos\omega t$ and $\sin\omega t$, and then equating the components of $\cos\omega t$ and $\sin\omega t$ from the last term and last but one (previous) .

$I\cos\phi = I_R$ and $I\sin\phi = (I_L - I_C)$

From these equations, the magnitude and phase angle of the total (supply) current are,

$$|I| = \sqrt{(I_R)^2 + (I_L - I_C)^2} = |V|\cdot\sqrt{\left(\frac{1}{R}\right)^2 + \left(\frac{1}{X_L} - \frac{1}{X_C}\right)^2}$$

$$= |V|\cdot\sqrt{\left(\frac{1}{R}\right)^2 + \left(\frac{1}{\omega L} - \omega C\right)^2} = |V|\cdot|Y|$$

$$\phi = \tan^{-1}\left(\frac{I_L - I_C}{I_R}\right) = \tan^{-1}\left(\frac{(1/X_L) - (1/X_C)}{(1/R)}\right) = \tan^{-1}\left[R\cdot\left(\frac{1}{X_l} - \frac{1}{X_C}\right)\right]$$

$$= \tan^{-1}\left[R\cdot\left(\frac{1}{\omega L} - \omega C\right)\right]$$

where, the magnitude of the term (admittance of the circuit) is,

$$|Y| = \sqrt{\left(\frac{1}{R}\right)^2 + \left(\frac{1}{X_L} - \frac{1}{X_C}\right)^2} = \sqrt{\left(\frac{1}{R}\right)^2 + \left(\frac{1}{\omega L} - \omega C\right)^2}$$

Please note that the admittance, which is reciprocal of impedance, is a complex quantity. The angle of admittance or impedance, is same as the phase angle, ϕ of the current I, with the input (supply) voltage taken as reference phasor, as given earlier.

Alternatively, the steps required to find the rms values of three branch currents and the total (suuply) current, using complex form of impedance, are given here.

Three branch currents are

$$I_R\angle 0° = I_R = \frac{V}{R}; \quad I_L\angle -90° = -jI_L = \frac{V}{jX_L} = \frac{V}{j\omega L} = -j\frac{V}{\omega L}$$

$$I_C\angle +90° = jI_C = \frac{V}{-jX_C} = \frac{V}{-j\,(1/\omega C)} = j\omega CV$$

Of the three branches, the first one consists of resistance only, the current, I_R is in phase with the voltage (V). In the second branch, the current, I_L lags the voltage by $90°$, as there is inductance only, while in the third one having capacitance only, the current, I_C leads the voltage $90°$. All these cases have been presented in the previous lesson.

The total current is

$$I \angle \pm \phi = I_R + j\left(I_c - I_L\right) = V\left[\frac{1}{R} + j\left(\omega C - \frac{1}{\omega L}\right)\right]$$

where,

$$I = \sqrt{I_R^2 + \left(I_C - I_L\right)^2} = V\sqrt{\left[\frac{1}{R^2} + \left(\omega C - \frac{1}{\omega L}\right)^2\right]}\text{, and}$$

$$\phi = \tan^{-1}\left(\frac{I_C - I_L}{I_R}\right) = \tan^{-1}\left[R\left(\omega C - \frac{1}{\omega L}\right)\right]$$

The two cases are as described earlier in series circuit.

(a) Inductive

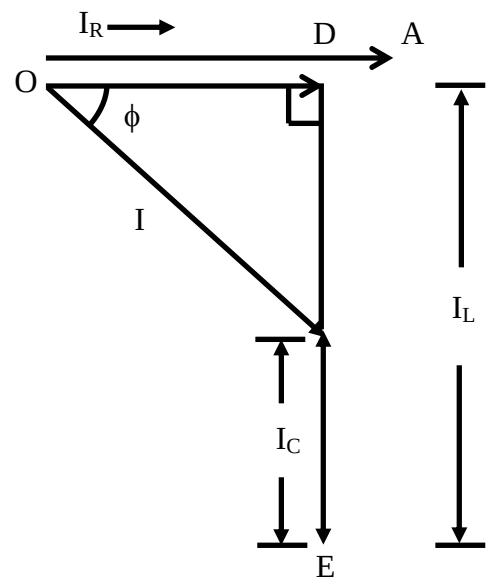

Inductive ($I_L > I_C$)

Fig. 15.4 (b) Phasor diagram

In this case, the circuit being inductive, the current lags the voltage by ϕ (positive), as $I_L > I_C$, i.e. $1/\omega L > \omega C$, or $\omega L < 1/\omega C$ .This condition is in contrast to that derived in the case of series circuit earlier. The power factor is less than 1 (one). The complete phasor diagram, with the three branch currents along with total current, and also the voltage, is shown in Fig. 15.4b. The voltage phasor is taken as reference in all cases. It may be observed there that

$$I_R(OD) + I_L(DC) + I_C(CB) = I(OB)$$

The Kirchoff's first law related to the currents at the node is applied, as stated above. The expression for the average power is $V\,I\cos\phi = I_R^2\,R = V^2/R$. The power is only consumed in the resistance, R, but not in inductance/capacitance (L/C), in all three cases.

(b) Capacitive

The circuit is capacitive, as $I_C > I_L$, i.e. $\omega C > 1/\omega L$, or $\omega L > 1/\omega C$. The current leads the voltage by ϕ (ϕ being negative), with the power factor less than 1 (one). The complete phasor diagram, with the three branch currents along with total current, and also the voltage, is shown in Fig. 15.4c.

The third case is resistive, as $|I_L| = |I_C|$, i.e.$1/\omega L = \omega C$ or $\omega L = 1/\omega C$. This is the same condition, as obtained in the case of series circuit. It may be noted that two currents, I_L and I_C, are equal in magnitude as shown, but opposite in sign (phase difference being$180°$), and the sum of these currents $(I_L + I_C)$ is zero (0). The total current is in phase with the voltage ($\phi = 0°$), with $|I| = |I_R|$, the power factor being unity. The complete phasor diagram, with the three branch currents along with total current, and also the voltage, is shown in Fig. 15.4d. This condition can be termed as 'resonance' in the parallel circuit, which is described in detail in lesson #17. The magnitude of the impedance in the circuit is maximum (i.e., the magnitude of the admittance is minimum) under this condition, with the magnitude of the total (supply) current being minimum.

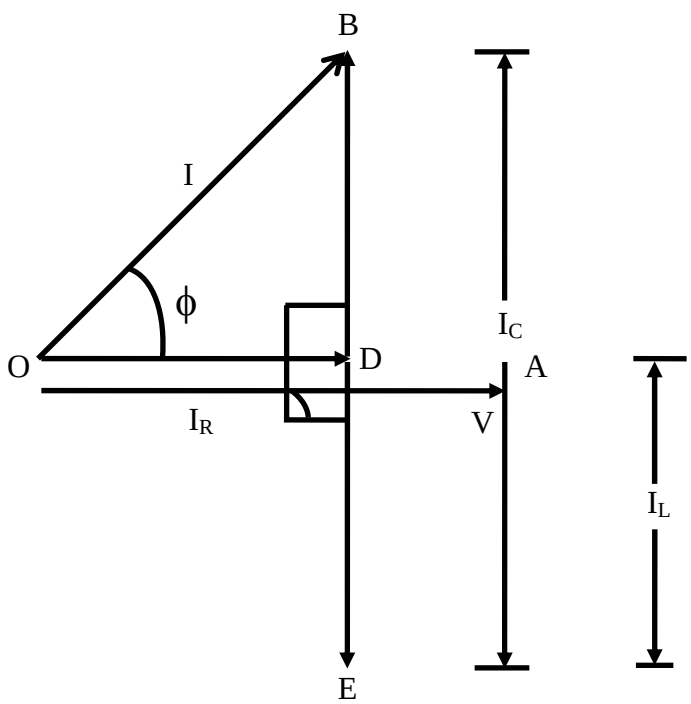

Capacitive ($I_L < I_C$)
Fig. 15.4 (c) Phasor diagram

The circuit with two elements, say R & L, can be solved, or derived with C being large ($I_C = 0$ or $1/\omega C = 0$).

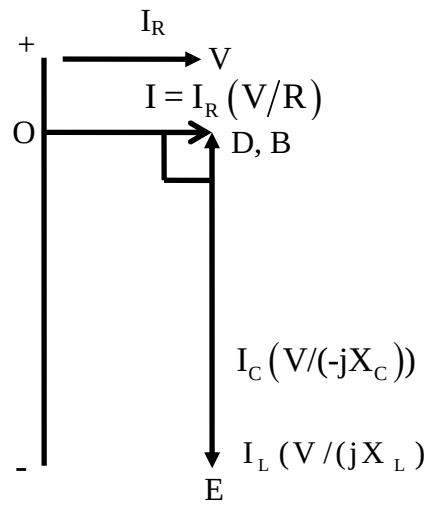

Resistive ($I_L = I_C$)

Fig. 15.4 (d) Phasor Diagram

Second method

Before going into the details of this method, the term, Admittance must be explained. In the case of two resistance connected in series, the equivalent resistance is the sum of two resistances, the resistance being scalar (positive). If two impedances are connected in series, the equivalent impedance is the sum of two impedances, all impedances being complex. Please note that the two terms, real and imaginary, of two impedances and also the equivalent one, may be positive or negative. This was explained in lesson no. 12.

If two resistances are connected in parallel, the inverse of the equivalent resistance is the sum of the inverse of the two resistances. If two impedances are connected in parallel, the inverse of the equivalent impedance is the sum of the inverse of the two impedances. The inverse or reciprocal of the impedance is termed 'Admittance', which is complex. Mathematically, this is expressed as

$$Y = \frac{1}{Z} = \frac{1}{Z_1} + \frac{1}{Z_2} = Y_1 + Y_2$$

As admittance (Y) is complex, its real and imaginary parts are called conductance (G) and susceptance (B) respectively. So, $Y = G + jB$. If impedance, $Z\angle\phi = R + jX$ with X being positive, then the admittance is

$$Y\angle -\phi = \frac{1}{Z\angle 0^\circ} = \frac{1}{R + jX} = \frac{R - jX}{(R + jX)(R - jX)} = \frac{R - jX}{R^2 + X^2}$$

$$= \frac{R}{R^2 + X^2} - j\frac{X}{R^2 + X^2} = G - jB$$

where,

$$G = \frac{R}{R^2 + X^2}\,; \quad B = \frac{X}{R^2 + X^2}$$

Please note the way in which the result of the division of two complex quantities is obtained. Both the numerator and the denominator are multiplied by the complex conjugate of the denominator, so as to make the denominator a real quantity. This has also been explained in lesson no. 12.

The magnitude and phase angle of Z and Y are

$$Z = \sqrt{R^2 + X^2}\,; \quad \phi = \tan^{-1}(X/R) \quad \text{, and}$$

$$Y = \sqrt{G^2 + B^2} = \frac{1}{\sqrt{R^2 + X^2}}\,; \quad \phi = \tan^{-1}\left(\frac{B}{G}\right) = \tan^{-1}\left(\frac{X}{R}\right)$$

To obtain the <u>current</u> in the circuit (Fig. 15.4a), the steps are given here.

The admittances of the three branches are

$$Y_1 \angle 0° = \frac{1}{Z_1} = \frac{1}{R}\,; \quad Y_2 \angle -90° = \frac{1}{Z_2} = \frac{1}{j X_L} = -j\frac{1}{\omega L}$$

$$Y_3 \angle 90° = \frac{1}{Z_3} = \frac{1}{-j X_C} = j\omega C$$

The total admittance, obtained by the phasor sum of the three branch admittances, is

$$Y \angle \pm\phi = Y_1 + Y_2 + Y_3 = \frac{1}{R} + j\left(\omega C - \frac{1}{\omega L}\right) = G + jB$$

where,

$$Y = \sqrt{\left[\frac{1}{R^2} + \left(\omega C - \frac{1}{\omega L}\right)^2\right]}\,; \quad \phi = \tan^{-1}\left[R\left(\omega C - \frac{1}{\omega L}\right)\right] \text{, and}$$

$$G = 1/R\,; \quad B = \omega C - 1/\omega L$$

The total impedance of the circuit is

$$Z \angle \mp\phi = \frac{1}{Y \angle \pm\phi} = \frac{1}{G + jB} = \frac{G}{G^2 + B^2} - j\frac{B}{G^2 + B^2}$$

The total current in the circuit is obtained as

$$I \angle \pm\phi = \frac{V \angle 0°}{Z \angle \mp\phi} = V\angle 0° \cdot Y \angle \pm\phi = (V\,Y) \angle \pm\phi$$

where the magnitude of current is $I = V \cdot Y = V/Z$

The current is the same as obtained earlier, with the value of Y substituted in the above equation.

This is best illustrated with an example, which is described in the next lesson.

The solution of the current in the series-parallel circuits will also be discussed there, along with some examples.

Problems

15.1 Calculate the current and power factor (lagging / leading) for the following circuits (Fig. 15.5a-d), fed from an ac supply of 200 V. Also draw the phasor diagram in all cases.

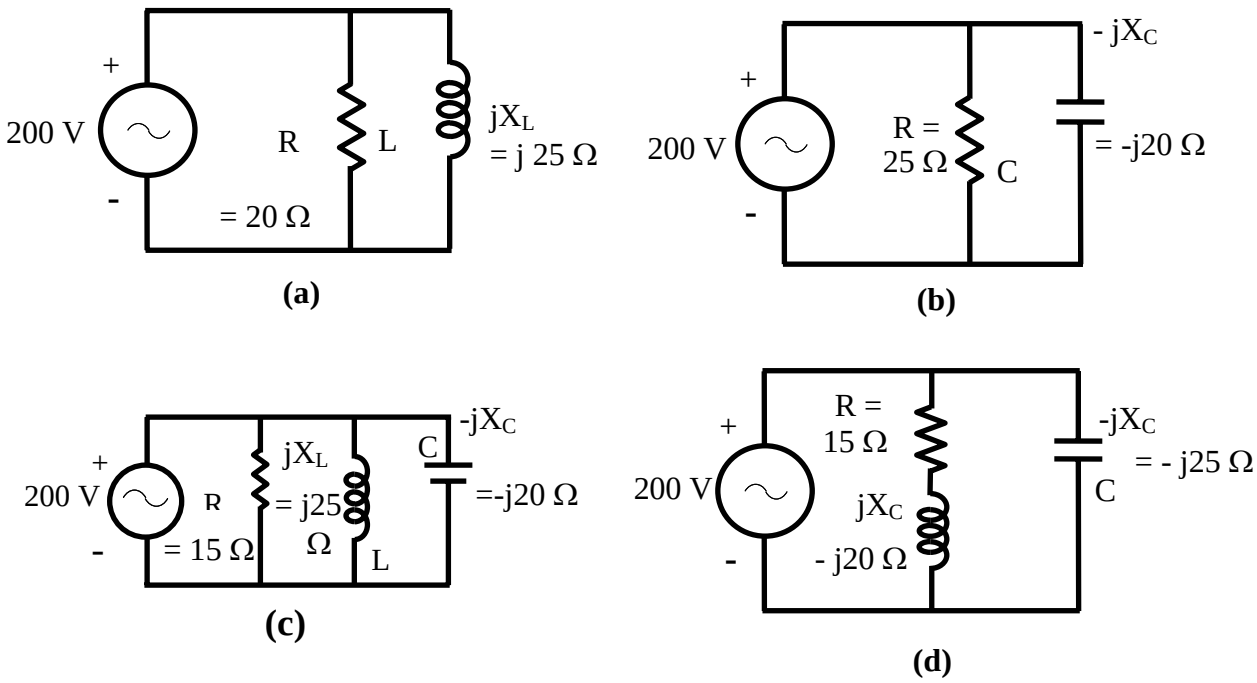

Fig. 15.5

15.2 A voltage of 200 V is applied to a pure resistor (R), a pure capacitor, C and a lossy inductor coil, all of them connected in parallel. The total current is 2.4 A, while the component currents are 1.5, 2.0 and 1.2 A respectively. Find the total power factor and also the power factor of the coil. Draw the phasor diagram.

15.3 A 200 V. 50Hz supply is connected to a lamp having a rating of 100 V, 200 W, in series with a pure inductance, L, such that the total power consumed is the same, i.e. 200W. Find the value of L.
A capacitance, C is now connected across the supply. Find value of C, to bring the supply power factor to unity (1.0). Draw the phasor diagram in the second case.

1.(a) Find the value of the load resistance (R_L) to be connected in series with a real voltage source (V_S + R_S in series), such that maximum power is transferred from the above source to the load resistance.

(b) Find the voltage was 8Ω resistance in the circuit shown in Fig. 1(b).

2.(a) Find the Theremin's equivalent circuit (draw the ckt.) between the terminals A + B, of the circuit shown in Fig. 2(a).

(b) A circuit shown in Fig. 2(b) is supplied at 40V, 50Hz. The two voltages V_1 and V_2 (magnitude only) is measured as 60V and 25V respectively. If the current, I is measured as 1A, find the values of R, L and C. Also find the power factor of the circuit (R-L-C). Draw the complete phasor diagram.

3.(a) Find the line current, power factor, and active (real) power drawn from 3-phase, 100V, 50Hz, balanced supply in the circuit shown in Fig. 3(a).

(b) In the circuit shown in Fig. 3(b), the switch, S is put in position 1 at t = 0. Find $i_e(t)$, $t > 0$, if $v_c(0^-) = 6V$. After the circuit reaches steady state, the switch, S is brought to position 2, at $t = T_1$. Find $i_c(t)$, $t > T_1$. Switch the above waveform.

4.(a) Find the average and rms values of the periodic waveform shown in Fig. 4(a).

(b) A coil of 1mH lowing a series resistance of 1Ω is connected in parallel with a capacitor, C and the combination is fed from 100 mV (0.1V), 1 kHz supply (source) having an internal resistance of 10Ω. If the circuit draws power at unity power factor (upf), determine the value of the capacitor, quality factor of the coil, and power drawn by the circuit. Also draw the phasor diagram.

List of Figures

Fig. 15.1 (a) Circuit diagram (R-L-C in series)
(b) Phasor diagram – Circuit is inductive ($X_l > X_C$)
(c) Phasor diagram – Capacitive ($X_l < X_C$)
(d) Phasor diagram – Resistive ($X_l = X_C$)

Fig. 15.2 (a) Circuit diagram (Ex. 15.1), (b) Phasor diagram

Fig. 15.3 (a) Circuit diagram (Ex. 15.2), (b) Phasor diagram

Fig. 15.4 (a) Circuit diagram (R-L-C in parallel)
(b) Phasor diagram – Circuit is inductive ($X_l < X_C$)
(c) Phasor diagram – Capacitive ($X_l > X_C$)
(d) Phasor diagram – Resistive ($X_l = X_C$)

Module 4

Single-phase AC circuits

Lesson 16

Solution of Current in AC Parallel and Series-parallel Circuits

In the last lesson, the following points were described:

1. How to compute the total impedance/admittance in series/parallel circuits?
2. How to solve for the current(s) in series/parallel circuits, fed from single phase ac supply, and then draw complete phasor diagram?
3. How to find the power consumed in the circuit and also the different components, and the power factor (lag/lead)?

In this lesson, the computation of impedance/admittance in parallel and series-parallel circuits, fed from single phase ac supply, is presented. Then, the currents, both in magnitude and phase, are calculated. The process of drawing complete phasor diagram is described. The computation of total power and also power consumed in the different components, along with power factor, is explained. Some examples, of both parallel and series-parallel circuits, are presented in detail.

Keywords: Parallel and series-parallel circuits, impedance, admittance, power, power factor.

After going through this lesson, the students will be able to answer the following questions;

1. How to compute the impedance/admittance, of the parallel and series-parallel circuits, fed from single phase ac supply?
2. How to compute the different currents and also voltage drops in the components, both in magnitude and phase, of the circuit?
3. How to draw the complete phasor diagram, showing the currents and voltage drops?
4. How to compute the total power and also power consumed in the different components, along with power factor?

This lesson starts with two examples of parallel circuits fed from single phase ac supply. The first example is presented in detail. The students are advised to study the two cases of parallel circuits given in the previous lesson.

Example 16.1

The circuit, having two impedances of $Z_1 = (8 + j15)\ \Omega$ and $Z_2 = (6 - j8)\ \Omega$ in parallel, is connected to a single phase ac supply (Fig. 16.1a), and the current drawn is 10 A. Find each branch current, both in magnitude and phase, and also the supply voltage.

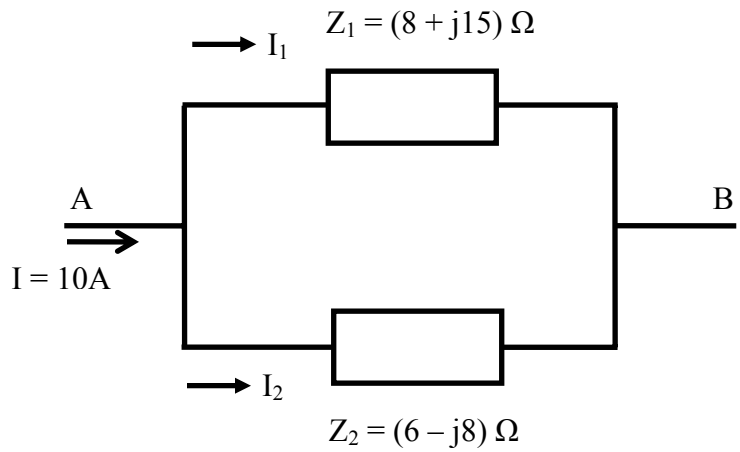

Fig. 16.1 (a) Circuit diagram

Solution

$Z_1 \angle \phi_1 = (8 + j15) = 17 \angle 61.93° \ \Omega \qquad Z_2 \angle -\phi_2 = (6 - j8) = 10 \angle -53.13° \ \Omega$

$I \angle 0° (OC) = 10 \angle 0° = (10 + j0) \ A$

The admittances, using impedances in <u>rectangular</u> form, are,

$$Y_1 \angle -\phi_1 = \frac{1}{Z_1 \angle \phi_1} = \frac{1}{8 + j15} = \frac{8 - j15}{8^2 + 15^2} = \frac{8 - j15}{289} = (27.68 - j51.9) \cdot 10^{-3} \ \Omega^{-1}$$

$$Y_2 \angle \phi_2 = \frac{1}{Z_2 \angle -\phi_2} = \frac{1}{6 - j8} = \frac{6 + j8}{6^2 + 8^2} = \frac{6 + j8}{100} = (60.0 + j80.0) \cdot 10^{-3} \ \Omega^{-1}$$

Alternatively, using impedances in <u>polar</u> form, the admittances are,

$$Y_1 \angle -\phi_1 = \frac{1}{Z_1 \angle \phi_1} = \frac{1}{17.0 \angle 61.93°} = 0.05882 \angle -61.93°$$

$$= (27.68 - j51.9) \cdot 10^{-3} \ \Omega^{-1}$$

$$Y_2 \angle \phi_2 = \frac{1}{Z_2 \angle -\phi_2} = \frac{1}{10.0 \angle -53.13°} = 0.1 \angle 53.13° = (60.0 + j80.0) \cdot 10^{-3} \ \Omega^{-1}$$

The total admittance is,

$$Y \angle \phi = Y_1 + Y_2 = [(27.68 - j51.9) + (60.0 + j80.0)] \cdot 10^{-3} = (87.68 + j28.1) \cdot 10^{-3}$$

$$= 92.07 \cdot 10^{-3} \angle 17.77° \ \Omega^{-1}$$

The total impedance is,

$$Z \angle -\phi = \frac{1}{Y \angle \phi} = \frac{1}{92.07 \cdot 10^{-3} \angle 17.77°} = 10.86 \angle -17.77° = (10.343 - j3.315) \ \Omega$$

The supply voltage is

$$V \angle -\phi \ (V_{AB}) = I \angle 0° \cdot Z \angle -\phi = (10 \times 10.86) \angle -17.77° = 108.6 \angle -17.77° \ V$$

$$= (103.43 - j33.15) \ V$$

The branch currents are,

$$I_1 \angle -\theta_1 \ (OD) = \frac{V \angle -\phi}{Z_1 \angle \phi_1} = \left(\frac{108.6}{17.0}\right) \angle -(17.77° + 61.93°) = 6.39 \angle -79.7° \ A$$

$= (1.143 - j\,6.286)\ A$

$I_2 \angle\theta_2\,(OE) = I\,\angle 0° - I_1 \angle -\theta_1\,(OC - OD = OC - CE)$

$= (10.0 + j\,0.0) - (1.143 - j\,6.286) = (8.857 + j\,6.286)\ A = 10.86\angle 35.36°\ A$

Alternatively, the current I_2 is,

$$I_2 \angle\theta_2\,(OE) = \frac{V\angle -\phi}{Z_2 \angle -\phi_2} = \left(\frac{108.6}{10.0}\right)\angle(-17.77° + 53.13°) = 10.86\angle 35.36°\ A$$

$= (8.857 + j\,6.285)\ A$

The phasor diagram with the total (input) current as reference is shown in Fig. 16.1b.

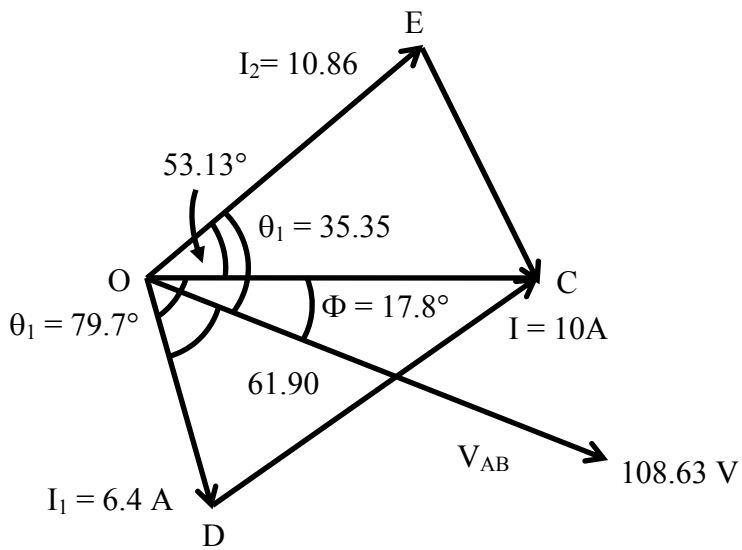

Fig. 16.1 (b) Phasor diagram

Alternative Method

$Z'\angle\phi' = Z_1\angle\phi_1 + Z_2\angle -\phi_2 = (8 + j15) + (6 - j8) = (14 + j\,7) = 15.65\angle 26.565°\ \Omega$

$$Z\angle -\phi = \frac{Z_1 \cdot Z_2}{Z_1 + Z_2} = \frac{Z_1\angle\phi_1 \cdot Z_2\angle -\phi_2}{Z'\angle\phi'} = \left(\frac{17.0\times 10.0}{15.65}\right)\angle(61.93° - 53.13° - 26.565°)$$

$= 10.86\angle -17.77° = (10.343 - j\,3.315)\ \Omega$

The supply voltage is

$V\angle -\phi\ (V_{AB}) = I\cdot Z = (10\times 10.86)\angle -17.77° = 108.6\angle -17.77°\ V$

$= (103.43 - j\,33.15)\ V$

The branch currents are,

$$I_1\angle -\theta_1\,(OD) = I\frac{Z_2}{Z_1 + Z_2} = \left(\frac{10.0\times 10.0}{15.65}\right)\angle(-53.13° - 26.565°) = 6.39\angle -79.7°\ A$$

$= (1.142 - j\,6.286)\ A$

$I_2 \angle\theta_2 (OE) = I - I_1 (OC - OD = OC - CE) = (10.0 + j\,0.0) - (1.142 - j\,6.286)$

$= (8.858 + j\,6.286)\ A = 10.862 \angle 35.36°\ A$

Alternatively, the current I_2 is,

$$I_2 \angle\theta_2 (OE) = I \frac{Z_1}{Z_1 + Z_2} = \left(\frac{10.0 \times 17.0}{15.65}\right) \angle(61.93° - 26.565°) = 10.86\ \angle 35..36°\ A$$

$= (8.858 + j\,6.286)\ A$

Example 16.2

The power consumed in the inductive load (Fig. 16.2a) is 2.5 kW at 0.71 lagging power factor (pf). The input voltage is 230 V, 50 Hz. Find the value of the capacitor C, such that the resultant power factor of the input current is 0.866 lagging.

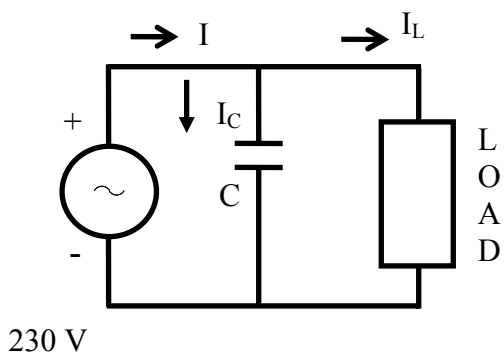

Fig. 16.2 (a) Circuit diagram

Solution

$P = 2.5\ KW = 2.5 \cdot 10^3 = 2500\ W$ V = 230 V f = 50 Hz

The power factor in the inductive branch is $\cos\phi_L = 0.71\,(lag)$

The phase angle is $\phi_L = \cos^{-1}(0.71) = 44.77° \approx 45°$

$P = V \cdot I_L \cos\phi_L = 230 \cdot (I_L \cos\phi_L) = 2500$

$$I_L = \frac{P}{V \cos\phi_L} = \frac{2500}{230 \times 0.71} = 15.31\ A$$

$I_L \cos\phi_L = 15.31 \times 0.71 = 10.87\ A$; $I_L \sin\phi_L = 15.32 \times \sin 45° = 10.87\,A$

The current I_L is, $I_L \angle -\phi_L = 15.31 \angle -45° = (10.87 - j10.87)\ A$

The power consumed in the circuit remains same, as the capacitor does not consume any power, but the reactive power in the circuit changes. The active component of the total current remains same as computed earlier.

$I \cos\phi = I_L \cos\phi_L = 10.87\ A$

The power factor of the current is $\cos\phi = 0.866\ (lag)$

The phase angle is $\phi = \cos^{-1}(0.866) = 30°$

The magnitude of the current is $I = 10.87 / 0.866 = 12.55\ A$

The current is $I \angle -\phi = 12.55 \angle -30° = (10.87 - j\,6.276)\ A$

The current in the capacitor is

$I_C \angle 90° = I \angle -\phi - I_L \angle -\phi_L = (10.87 - j6.276) - (10.87 - j10.87)$

$= j\ 4.504 = 4.504 \angle 90°\ A$

This current is the difference of two reactive currents,

$-I_C = I \sin\phi - I_L \sin\phi_L = 6.276 - 10.87 = -4.504\ A$

The reactance of the capacitor, C is $X_C = \dfrac{1}{2\pi f C} = \dfrac{V}{I_C} = \dfrac{230}{4.504} = 51.066\ \Omega$

The capacitor, C is $C = \dfrac{1}{2\pi f X_C} = \dfrac{1}{2\pi \times 50 \times 51.066} = 62.33 \cdot 10^{-6} = 62.33\ \mu F$

The phasor diagram with the input voltage as reference is shown in Fig. 16.2b.

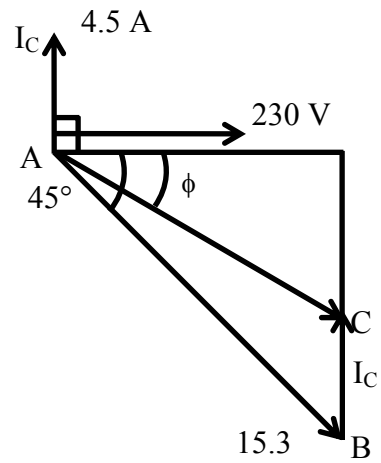

Fig. 16.2 (b) Phasor diagram

Example 16.3

An inductive load (R in series with L) is connected in parallel with a capacitance C of 12.5 μF (Fig. 16.3a). The input voltage to the circuit is 100 V at 31.8 Hz. The phase angle between the two branch currents, ($I_1 = I_L$) and ($I_2 = I_C$) is $120°$, and the current in the first branch is $I_1 = I_L = 0.5\ A$. Find the total current, and also the values of R & L.

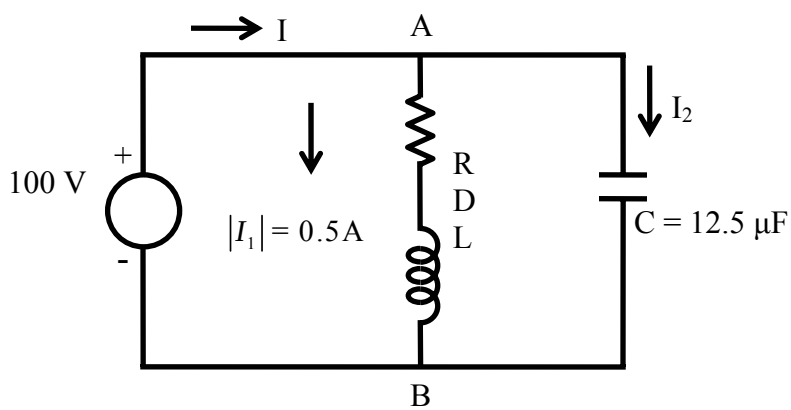

Fig. 16.3 (a) Circuit diagram

Solution

$f = 31.8$ Hz $\qquad \omega = 2\pi f = 2\pi \times 31.8 \approx 200 \;\; rad/s \qquad$ V = 100 V

$I_1 = 0.5\ A \qquad$ C $= 12.5\,\mu F = 12.5 \cdot 10^{-6}\ F$

$X_C = 1/(\omega C) = 1/(200 \times 12.5 \cdot 10^{-6}) = 400\ \Omega$

The current in the branch no. 2 is

$I_2 \angle 90° = V/(-j\,X_C) = 100\angle 0°/400\angle -90° = (100/400)\angle 90° = 0.25\angle 90°$

$= (0.0 + j\,0.25)\ A$

The current in the branch no. 1 is $I_1 \angle -\phi_1 = 0.5\angle -\phi_1$

The phase angle between I_1 and I_2 is $90° + \phi_1 = 120°$

So, $\phi_1 = 120° - 90° = 30°$

$I_1 \angle -30° = 0.5\angle -30° = (0.433 - j\,0.25)\ A$

The impedance of the branch no. 1 is,

$Z_1 \angle \phi_1 = (R + j\,X_L) = V\angle 0°/I_1 \angle -30° = (100/0.5)\angle 30° = 200\angle 30°$

$= (173.2 + j\,100.0)\ \Omega$

$R = 173.2\ \ \Omega \qquad X_L = \omega L = 100.0\ \Omega$

So, $L = X_L/\omega = 100/200 = 0.5\ H = 500 \cdot 10^{-3} = 500\ mH$

The total current is,

$I\angle 0° = I_1 \angle -30° + I_2 \angle 90° = (0.433 - j\,0.25) + j\,0.25 = (0.433 + j\,0.0)$

$= 0.433\angle 0°\ A$

The total impedance is,

$Z\angle 0° = (R' + j\,0) = V\angle 0°/I\angle 0° = (100/0.433)\angle 0° = 231.0\angle 0°$

$= (231.0 + j\,0.0)\ \Omega$

The current, I is in phase with the input voltage, V .

The total admittance is $Y\angle 0° = Y_1 \angle -\phi_1 + Y_2 \angle 90° = (1/Z_1 \angle 30°) + (1/Z_2 \angle -90°)$

The total impedance is $Z\angle 0° = (Z_1 \angle 30° \cdot Z_2 \angle -90°)/(Z_1 \angle 30° + Z_2 \angle -90°)$

Any of the above values can be easily calculated, and then checked with those obtained earlier. The phasor diagram is drawn in Fig. 16.3b.

Solution of Current in Series-parallel Circuit

Series-parallel circuit

The circuit, with a branch having impedance Z_1, in series with two parallel branches having impedances, Z_2 and Z_3 , shown in Fig. , , is connected to a single phase ac supply.

The impedance of the branch, AB is $Z_{AB} \angle \phi_{AB} = Z_1 \angle \phi_1$

$$Y_2 \angle -\phi_2 = \frac{1}{Z_2 \angle \phi_2} \;\; ; \;\; Y_3 \angle -\phi_3 = \frac{1}{Z_3 \angle \phi_3}$$

The admittance of the parallel branch, BC is

$$Y_{BC} \angle -\phi_{BC} = Y_2 \angle -\phi_2 + Y_3 \angle -\phi_3 = \frac{1}{Z_2 \angle \phi_2} + \frac{1}{Z_3 \angle \phi_3}$$

The impedance of the parallel branch, BC is

$$Z_{BC} \angle \phi_{BC} = \frac{1}{Y_{BC} \angle -\phi_{BC}} = \frac{Z_2 \angle \phi_2 + Z_3 \angle \phi_3}{Z_2 \angle \phi_2 \cdot Z_3 \angle \phi_3} = \frac{Z_2 \angle \phi_2 + Z_3 \angle \phi_3}{(Z_2 Z_3) \angle (\phi_2 + \phi_3)}$$

The total impedance of the circuit is

$$Z_{AC} \angle \phi_{AC} = Z_{AB} \angle \phi_{AB} + Z_{BC} \angle \phi_{BC} = Z_1 \angle \phi_1 + Z_{BC} \angle \phi_{BC}$$

The supply current is

$$I \angle -\phi_{AC} = \frac{V \angle 0°}{Z_{AC} \angle \phi_{AC}}$$

The current in the impedance Z_2 is

$$I_2 \angle \phi_4 = I \angle -\phi_{AC} \frac{Z_3 \angle \phi_3}{(Z_2 \angle \phi_2 + Z_3 \angle \phi_3)}$$

Thus, the currents, along with the voltage drops, in all branches are calculated. The phasor diagram cannot be drawn for this case now. This is best illustrated with the following examples, where the complete phasor diagram will also be drawn in each case.

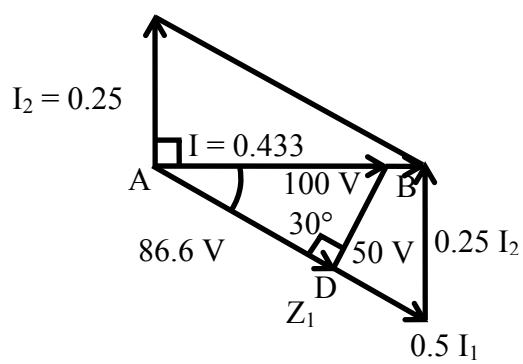

Fig. 16.3 (b) Phasor diagram

Example 16.4

Find the input voltage at 50 Hz to be applied to the circuit shown in Fig. 16.4a, such that the current in the capacitor is 8 A?

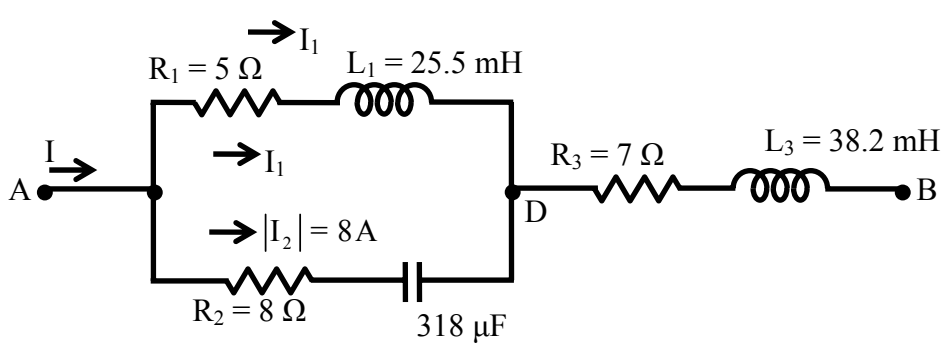

Fig. 16.4 (a) Circuit diagram

Solution

$f = 50$ Hz $\qquad \omega = 2\pi f = 2\pi \times 50 = 314.16 \;\; rad/s$

$L_1 = 0.0255\, H \qquad L_3 = 0.0382\, H \qquad C = 318\, \mu F = 318 \cdot 10^{-6}\, F$

$X_1 = \omega L_1 = 314.16 \times 0.0255 = 8\;\; \Omega \qquad X_3 = \omega L_3 = 314.16 \times 0.0382 = 12\;\; \Omega$

$X_2 = 1/(\omega C) = 1/(314.16 \times 318 \cdot 10^{-6}) = 10\,\Omega \qquad I_2 \angle 0° = 8\,\angle 0° = (8 + j0)\, A$

$Z_1 \angle \phi_1 = R_1 + j X_1 = (5 + j8) = 9.434 \angle 58°\;\; \Omega$

$Z_2 \angle -\phi_2 = R_2 - j X_2 = (8 - j10) = 12.806 \angle -51.34°\;\; \Omega$

$Z_3 \angle \phi_3 = R_3 + j X_3 = (7 + j12) = 13.89 \angle 59°.74\;\; \Omega$

$V_{AC}\;\angle -\phi_2 = I_2 \angle 0° \cdot Z_2 \angle -\phi_2 = (8.0 \times 12.806) \angle -51.34° = 102.45 \angle -51.34°\;\; V$

$= (64 - j80)\, V$

$$I_1\;\angle -\theta_1 = \frac{V_{AC} \angle -\phi_2}{Z_1 \angle \phi_1} = \left(\frac{102.45}{9.434}\right) \angle -(51.34° + 58°) = 10.86 \angle -109.34°\; A$$

$= (-3.6 - j10.25)\; A$

$I \angle -\theta_3 = I_1 \angle -\theta_1 + I_2 \angle 0° = -(3.6 + j10.25) + (8.0 + j0.0) = (4.4 - j10.25)$

$= 11.154 \angle -66.77°\; A$

$V_{CB}\;\angle -\theta_{CB} = I \angle -\theta_3 \cdot Z_3 \angle \phi_3 = (11.154 \times 13.89) \angle (-66.77° + 59.74°)$

$= 154.93 \angle -7.03°\;\; V = (153.764 - j18.96)\, V$

$V_{AB} \angle -\theta_{AB} = V_{AC} \angle -\phi_2 + V_{CB} \angle -\theta_{CB} = (64.0 - j80.0) + (153.764 - j18.96)$

$= (217.764 - j90.96) = 239.2 \angle -24.44°\, V$

The phasor diagram with the branch current, I_2 as reference, is shown in Fig. 16.4b.

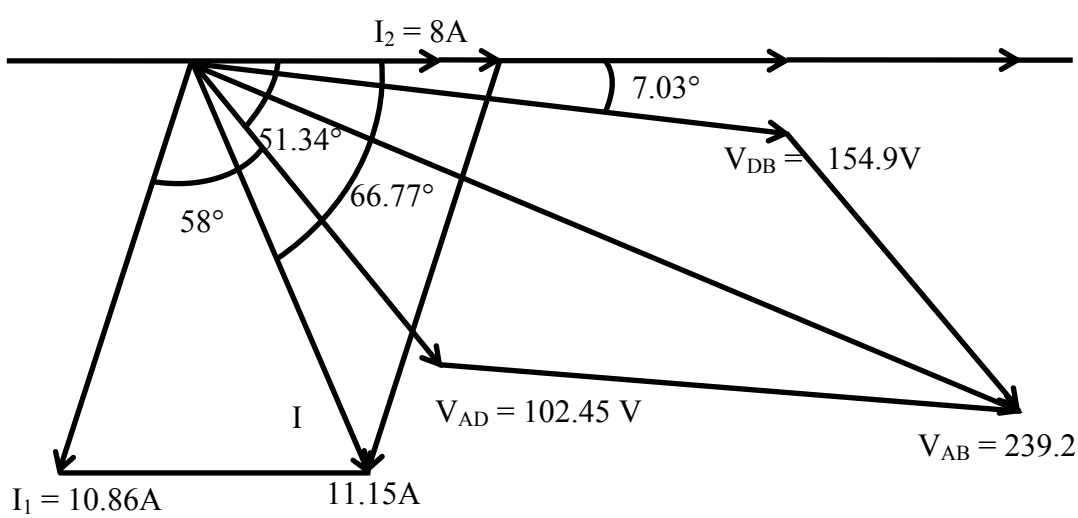

Fig. 16.4 (b) Phasor diagram

Example 16.5

A resistor of 50 Ω in parallel with an inductor of 30 mH, is connected in series with a capacitor, C (Fig. 16.5a). A voltage of 220 V, 50 Hz is applied to the circuit. Find,

(a) the value of C to give unity power factor,
(b) the total current, and
(c) the current in the inductor

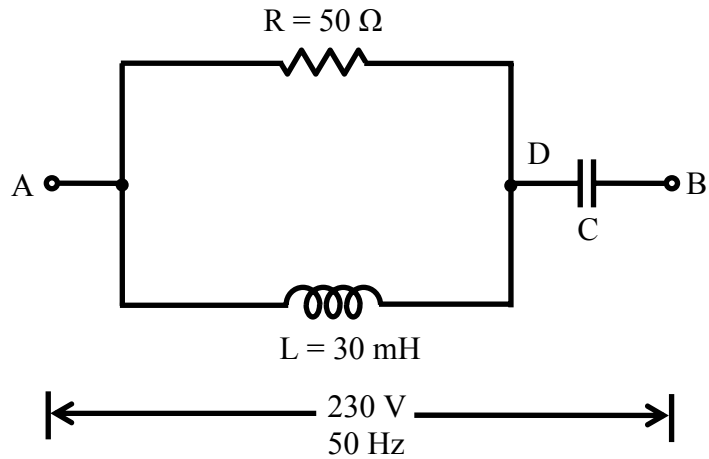

Fig. 16.5 (a) Circuit diagram

Solution

$f = 50$ Hz $\qquad \omega = 2\pi f = 2\pi \times 50 = 314.16 \ rad/s$

$R = 50\ \Omega \qquad$ V = 220 V $\qquad L = 30\ mH = 30 \cdot 10^{-3} = 0.03\ H$

$X_L = \omega L = 314.16 \times 0.03 = 94.24\ \Omega$

The admittance, Y_{AD} is,

$$Y_{AD} \angle -\phi_{AD} = \frac{1}{R} + \frac{1}{j X_l} = \frac{1}{50} + \frac{1}{j 94.24} = (20.0 - j10.61) \cdot 10^{-3}$$

$$= 0.02264 \angle -27.95°\ \Omega^{-1}$$

The impedance, Z_{AD} is,

$$Z_{AD} \angle \phi_{AD} = 1/(Y_{AD} \angle \phi_{AD}) = 1/(0.02264 \angle -27.95°) = 44.17 \angle 27.95°$$

$$= (39.02 + j20.7)\ \Omega$$

The impedance of the branch (DB) is $Z_{DB} = -j X_C = -j[1/(\omega C)$.

As the total current is at unity power factor (upf), the total impedance, Z_{AB} is resistive only.

$$Z_{AB} \angle 0° = R_{AB} + j0 = Z_{AD} \angle \phi_{AD} + Z_{DB} \angle -90° = 39.02 + j(20.7 - X_C)$$

Equating the imaginary part, $X_c = 1/(\omega C) = 20.7\ \Omega$

The value of the capacitance C is,

$$C = \frac{1}{\omega X_C} = \frac{1}{314.16 \times 20.7} = 153.8 \cdot 10^{-6} = 153.8\ \mu F$$

So, $Z_{AB} \angle 0° = R_{AB} + j0 = (39.02 + j0.0) = 39.02\ \angle 0°\ \ \Omega$

The total current is,

$$I \angle 0° = V \angle 0° / Z_{AB} \angle 0° = (220.0/39.02) \angle 0° = (5.64 + j0.0) = 5.64 \angle 0°\ A$$

The voltage, V_{AD} is,

$$V_{AD} \angle \phi_{AD} = I \angle 0° \cdot Z_{AD} \angle \phi_{AD} = (5.64 \times 44.17) \angle 27.95° = 249.05 \angle 27.95°\ V$$

$$= (220.0 + j116.73)\ V$$

The current in the inductor, I_L is,

$$I_L \angle \theta_L = V_{AD} \angle \phi_{AD} / X_L \angle 90° = (249.05/94.24) \angle (27.95° - 90°)$$

$$= 2.64\ \angle -62.05°\ A = (1.24 - j2.335)\ A$$

The phasor diagram is shown in Fig. 16.5b.

Fig. 16.5 (b) Phasor diagram

Example 16.6

In the circuit (Fig. 16.6a) the wattmeter reads 960 W and the ammeter reads 6 A. Calculate the values of V_S, V_C, I_C, I, I_L and X_C .

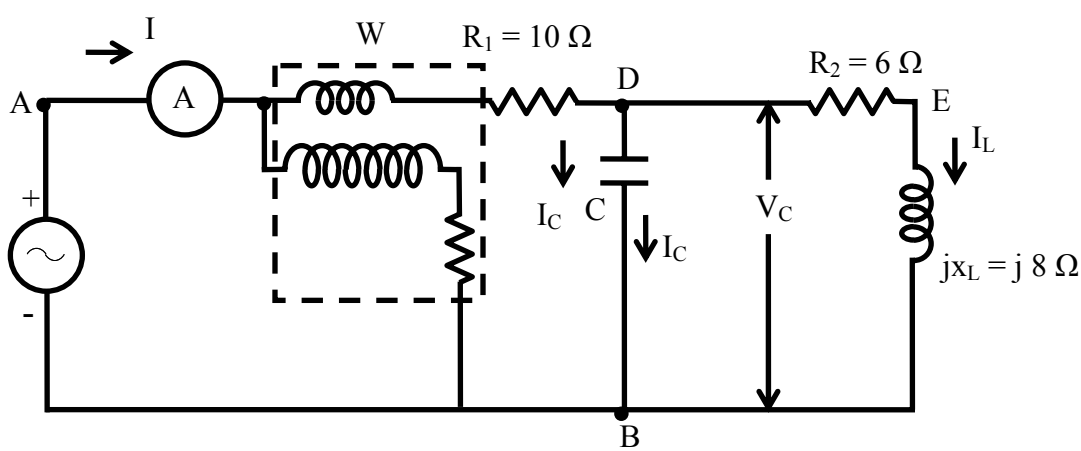

Fig. 16.6 (a) Circuit diagram

Solution

In this circuit, the power is consumed in two resistance, R_1 and R_2 only, but not consumed in inductance L, and capacitance C. These two components affect only the reactive power.

P = 960 W I = 6 A $R_1 = 10\,\Omega$

$R_2 = 6\,\Omega$ $X_L = 8\,\Omega$

Total power is, $P = I^2 \cdot R_1 + I_L^2 \cdot R_2 = (6)^2 \times 10 + 6 \cdot I_L^2 = 360 + 6 \cdot I_L^2 = 960\,W$

or, $6 \cdot I_L^2 = 960 - 360 = 600\,W$

So, $I_L = \sqrt{600/6} = 10\,A$

The impedance of the inductive branch is,

$Z_L = R_2 + j\,X_L = (6 + j8) = 10\angle 53.13°\,\Omega$

The magnitude of the voltage in the inductive branch is,

$V_{DB} = V_C = I_L \cdot Z_L = 10 \times 10 = 100\,V$

Assuming $V_{DB} = 100\angle 0°$ as reference, the current, I_L is,

$I_L \angle -\phi_L = V_{DB}\angle 0° / Z_L \angle \phi_L = (100/10)\angle -53.13° = 10\angle -53.13°\,A = (6 - j8)\,A$

The current, $I_C \angle 90° = j\,I_C = V_{DB}\angle 0° / X_C \angle -90° = (V / X_C)\angle 90°$

The total current is $I\angle\phi = I_L \angle -\phi_L + I_C \angle 90° = (6 - j8) + j\,I_C = 6 + j(I_C - 8)$

So, $I = \sqrt{(6)^2 + (I_C - 8)^2} = 6\,A$

or, $36 + (I_C - 8)^2 = (6)^2 = 36$

So, $I_C = 8\,A$

The capacitive reactance is, $X_C = V_{DB} / I_C = 100/8 = 12.5\,\Omega$

The total current is $I\angle 0° = (6 + j0) = 6\angle 0°\,A$

or, it can be written as,

$I\angle 0° = I_L \angle -\phi_L + I_C \angle 90° = (6 - j8) + j8 = (6 + j0) = 6\angle 0°\,A$

The voltage V_{AD} is.

$V_{AD}\angle 0° = I\angle 0° \cdot (R_1 + j0) = (I \cdot R_1)\angle 0° = (6 \times 10)\angle 0° = 60\angle 0° = (60 + j0)\,V$

The voltage, $V_S = V_{AB}$ is.

$V_S = V_{AB}\angle 0° = V_{AD}\angle 0° + V_{DB}\angle 0° = (60 + 100)\angle 0° = 160\angle 0° = (160 + j0)\,V$

The current, I is in phase with $V_S = V_{AB}$, and also V_{DB} .

The total impedance is,

$Z_{AB}\angle 0° = Z_{AD}\angle 0° + Z_{DB}\angle 0° = V_{AB}\angle 0° / I\angle 0° = (160/6)\angle 0° = 26.67\angle 0°$

$= (26.67 + j0.0)\,\Omega$

The impedance, Z_{DB} is,

$Z_{DB}\angle 0° = Z_{AB}\angle 0° - Z_{AD}\angle 0° = V_{DB}\angle 0° / I\angle 0° = (100/6)\angle 0° = 16.67\angle 0°$

$= (16.67 + j0.0)\,\Omega$

Both the above impedances can be easily obtained using the circuit parameters by the method given earlier, and then checked with the above values. The impedance, Z_{DB} can

be obtained by the steps given in Example 16.3. The phasor diagram is shown in Fig. 16.6b.

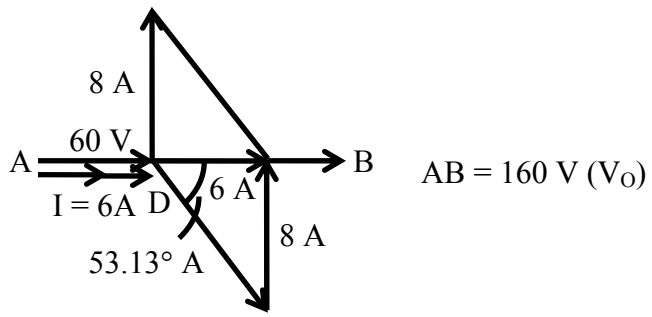

Fig. 16.6 (b) Phasor diagram

Starting with the examples of parallel circuits, the solution of the current in the series-parallel circuit, along with the examples, was taken up in this lesson. The problem of resonance in series and parallel circuits will be discussed in the next lesson. This will complete the module of single phase ac circuits

Problems

16.1 Find the impedance, Z_{ab} in the following circuits (Fig. 16.7a-b): (check with admittance diagrams in complex plane)

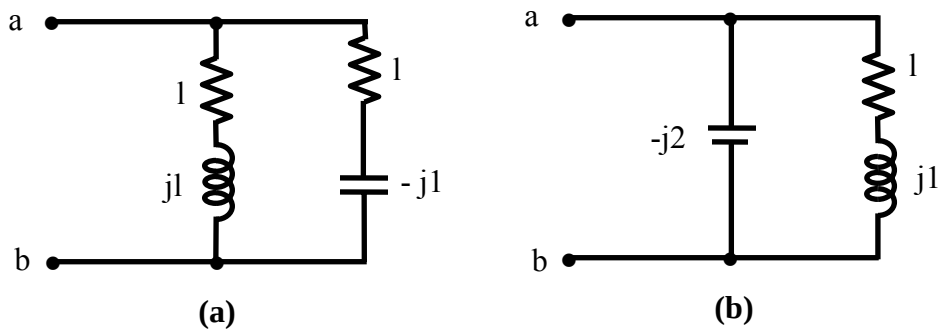

Fig. 16.7

16.2 A resistor (R) of 50 Ω in parallel with a capacitor (C) of 40 μF, is connected in series with a pure inductor (L) of 30 mH to a 100 V, 50 Hz supply. Calculate the total current and also the current in the capacitor. Draw the phasor diagram.

16.3 In a series-parallel circuit (Fig.16.8), the two parallel branches A and B, are in series with the branch C. The impedances in Ω are, Z_A = 5+j, Z_B = 6-j8, and Z_C = 10+j8. The voltage across the branch, C is (150+j0) V. Find the branch currents, I_A and I_B, and the phase angle between them. Find also the input voltage. Draw the phasor diagram.

16.4 A total current of 1A is drawn by the circuit (Fig.16.9) fed from an ac voltage, V of 50 Hz. Find the input voltage. Draw the phasor diagram.

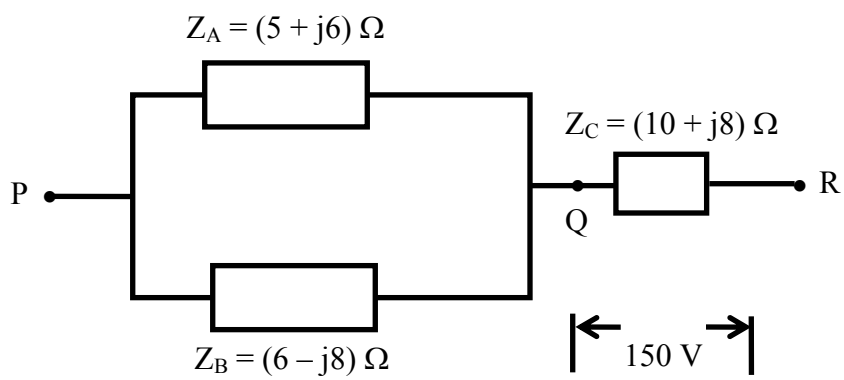

Fig. 16.8

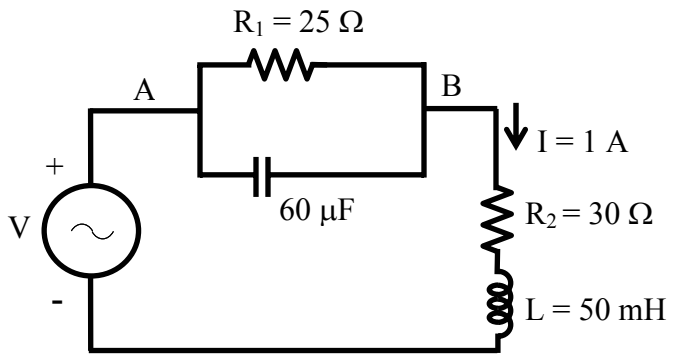

Fig. 16.9

List of Figures

Fig. 16.1 (a) Circuit diagram (Ex. 16.1) (b) Phasor diagram
Fig. 16.2 (a) Circuit diagram (Ex. 16.2) (b) Phasor diagram
Fig. 16.3 (a) Circuit diagram (Ex. 16.3) (b) Phasor diagram
Fig. 16.4 (a) Circuit diagram (Ex. 16.4) (b) Phasor diagram
Fig. 16.5 (a) Circuit diagram (Ex. 16.5) (b) Phasor diagram
Fig. 16.6 (a) Circuit diagram (Ex. 16.6) (b) Phasor diagram

Module 4

Single-phase AC Circuits

Lesson 17

Resonance in Series and Parallel Circuits

In the last lesson, the following points were described:

1. How to compute the total impedance in parallel and series-parallel circuits?
2. How to solve for the current(s) in parallel and series-parallel circuits, fed from single phase ac supply, and then draw complete phasor diagram?
3. How to find the power consumed in the circuits and also the different components, and the power factor (lag/lead)?

In this lesson, the phenomenon of the resonance in series and parallel circuits, fed from single phase variable frequency supply, is presented. Firstly, the conditions necessary for resonance in the above circuits are derived. Then, the terms, such as bandwidth and half power frequency, are described in detail. Some examples of the resonance conditions in series and parallel circuits are presented in detail, along with the respective phasor diagrams.

Keywords: Resonance, bandwidth, half power frequency, series and parallel circuits,

After going through this lesson, the students will be able to answer the following questions;

1. How to derive the conditions for resonance in the series and parallel circuits, fed from a single phase variable frequency supply?
2. How to compute the bandwidth and half power frequency, including power and power factor under resonance condition, of the above circuits?
3. How to draw the complete phasor diagram under the resonance condition of the above circuits, showing the currents and voltage drops in the different components?

Resonance in Series and Parallel Circuits

Series circuit

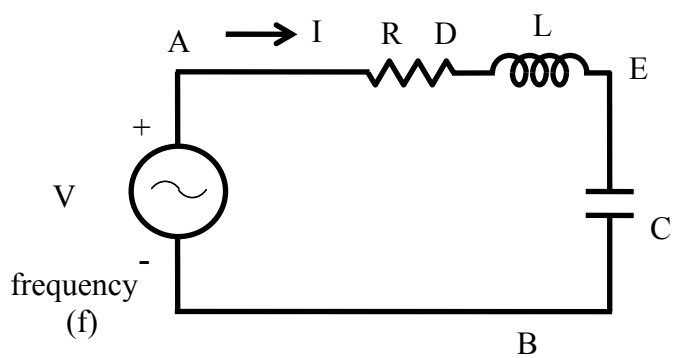

Fig. 17.1 (a) Circuit diagram.

The circuit, with resistance R, inductance L, and a capacitor, C in series (Fig. 17.1a) is connected to a single phase variable frequency (f) supply.

The total impedance of the circuit is

$$Z\angle\phi = R + j\left(\omega L - \frac{1}{\omega C}\right)$$

where,

$$Z = \sqrt{\left[R^2 + \left(\omega L - \frac{1}{\omega C}\right)^2\right]} \;;\quad \phi = \tan^{-1}\frac{(\omega L - 1/\omega C)}{R} \;;\quad \omega = 2\pi f$$

The current is

$$I\angle -\phi = \frac{V\angle 0°}{Z\angle\phi} = (V/Z)\angle -\phi$$

where $I = \dfrac{V}{\left[R^2 + (\omega L - (1/\omega C)^2\right]^{\frac{1}{2}}}$

The current in the circuit is maximum, if $\omega L = \dfrac{1}{\omega C}$.

The frequency under the above condition is

$$f_o = \frac{\omega_o}{2\pi} = \frac{1}{2\pi\sqrt{LC}}$$

This condition under the magnitude of the current is maximum, or the magnitude of the impedance is minimum, is called resonance. The frequency under this condition with the constant values of inductance L, and capacitance C, is called resonant frequency. If the capacitance is variable, and the frequency, f is kept constant, the value of the capacitance needed to produce this condition is

$$C = \frac{1}{\omega^2 L} = \frac{1}{(2\pi f)^2 L}$$

The magnitude of the impedance under the above condition is $|Z| = R$, with the reactance $X = 0$, as the inductive reactance $X_l = \omega L$ is equal to capacitive reactance $X_C = 1/\omega C$. The phase angle is $\phi = 0°$, and the power factor is unity ($\cos\phi = 1$), which means that the current is in phase with the input (supply) voltage.. So, the magnitude of the current ($|(V/R)|$) in the circuit is only limited by resistance, R. The phasor diagram is shown in Fig. 17.1b.

The magnitude of the voltage drop in the inductance L/capacitance C (both are equal, as the reactance are equal) is $I \cdot \omega_o L = I \cdot (1/\omega_o C)$.

The magnification of the voltage drop as a ratio of the input (supply) voltage is

$$Q = \frac{\omega_o L}{R} = \frac{2\pi f_o L}{R} = \frac{1}{R}\sqrt{\frac{L}{C}}$$

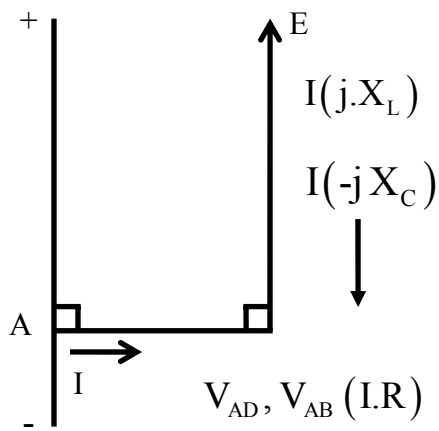

Fig. 17.1 (b) Phasor Diagram

It is termed as Quality (Q) factor of the coil.

The impedance of the circuit with the constant values of inductance L, and capacitance C is minimum at resonant frequency (f_o), and increases as the frequency is changed, i.e. increased or decreased, from the above frequency. The current is maximum at $f = f_o$, and decreases as frequency is changed ($f > f_o$, or $f < f_o$), i.e. $f \neq f_o$. The variation of current in the circuit having a known value of capacitance with a variable frequency supply is shown in Fig. 17.2.

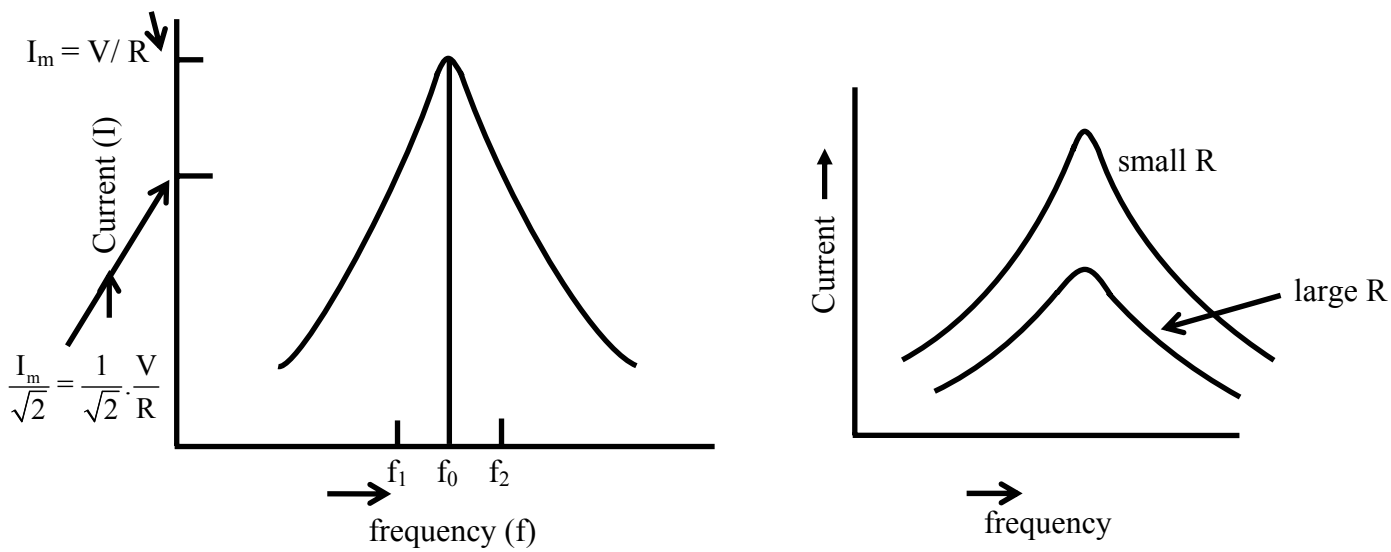

Fig. 17.2 Variation of current under variable frequency supply

The maximum value of the current is (V/R). If the magnitude of the current is reduced to $(1/\sqrt{2})$ of its maximum value, the power consumed in R will be half of that with the maximum current, as power is I^2R. So, these points are termed as half power

points. If the two frequencies are taken as f_1 and f_2, where $f_1 = f_0 - \Delta f/2$ and $f_2 = f_0 + \Delta f/2$, the band width being given by $\Delta f = f_2 - f_1$.

The magnitude of the impedance with the two frequencies is

$$Z = \left[R^2 + \left(2\pi(f_0 \pm \Delta f/2)L - \frac{1}{2\pi(f_0 \pm \Delta f/2)C} \right)^2 \right]^{\frac{1}{2}}$$

As ($2\pi f_0 L = 1/2\pi f_0 C$) and the ratio ($\Delta f/2 f_0$) is small, the magnitude of the reactance of the circuit at these frequencies is $X = X_{L0}(\Delta f/f_0)$. As the current is ($1/\sqrt{2}$) of its maximum value, the magnitude of the impedance is ($\sqrt{2}$) of its minimum value (R) at resonant frequency.

So, $Z = \sqrt{2} \cdot R = \left[R^2 + \left(X_{L0}(\Delta f/f_0) \right)^2 \right]^{\frac{1}{2}}$

From the above, it can be obtained that $(\Delta f/f_0) X_{L0} = R$

or $\Delta f = f_2 - f_1 = \dfrac{R f_0}{X_{L0}} = \dfrac{R f_0}{2\pi f_0 L} = \dfrac{R}{2\pi L}$

The band width is given by $\Delta f = f_2 - f_1 = R/(2\pi L)$

It can be observed that, to improve the quality factor (Q) of a coil, it must be designed to have its resistance, R as low as possible. This also results in reduction of band width and losses (for same value of current). But if the resistance, R cannot be decreased, then Q will decrease, and also both band width and losses will increase.

Example 17.1

A constant voltage of frequency, 1 MHz is applied to a lossy inductor (r in series with L), in series with a variable capacitor, C (Fig. 17.3). The current drawn is maximum, when C = 400 pF; while current is reduced to ($1/\sqrt{2}$) of the above value, when C = 450 pF. Find the values of r and L. Calculate also the quality factor of the coil, and the bandwidth.

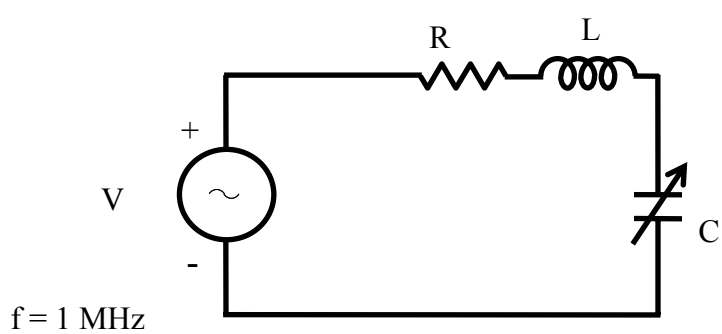

Fig. 17.3 Circuit diagram

Solution

f = 1 MHz = 10^6 Hz $\qquad \omega = 2\pi f \qquad C = 400\ pF = 400 \cdot 10^{-12}\ F$

$I_{max} = V/r$ as $X_L = X_C$ $\quad X_c = \dfrac{1}{2\pi f C} = \dfrac{1}{2\pi \cdot 10^6 \times 400 \cdot 10^{-12}} = 398\ \Omega$

$X_L = X_C = 2\pi f L = 398\ \Omega$ $\quad L = \dfrac{398.0}{2\pi \cdot 10^6} = 63.34\ \mu H$

$C_1 = 450\ pF$ $\quad X_{C1} == \dfrac{1}{2\pi \cdot 10^6 \times 450 \cdot 10^{-12}} = 353.7\ \Omega$

$Z\angle\phi = r + j\left(X_L - X_{C1}\right) = r + j(398.0 - 353.7) = (r + j\,44.3)\ \Omega$

$I = \dfrac{I_{max}}{\sqrt{2}} = \dfrac{V}{\sqrt{2}\cdot r} = \dfrac{V}{Z} = \dfrac{V}{\sqrt{r^2 + (44.3)^2}}$

From above, $\sqrt{2}\cdot r = \sqrt{r^2 + (44.3)^2}$ $\quad$ or $2r^2 = r^2 + (44.3)^2$

or $r = 44.3\ \Omega$

The quality factor of the coil is $Q = \dfrac{X_L}{r} = \dfrac{398.0}{44.3} = 8.984$

The band with is

$\Delta f = f_2 - f_1 = \dfrac{r}{2\pi L} = \dfrac{44.3}{2\pi \times 63.34 \cdot 10^{-6}} = \dfrac{44.3}{398 \cdot 10^{-6}} = 0.1113 \cdot 10^6 = 0.1113\ MHz$

$= 111.3 \cdot 10^3 = 111.3\ kHz$

Parallel circuit

The circuit, with resistance R, inductance L, and a capacitor, C in parallel (Fig. 17.4a) is connected to a single phase variable frequency (f) supply.

The total admittance of the circuit is

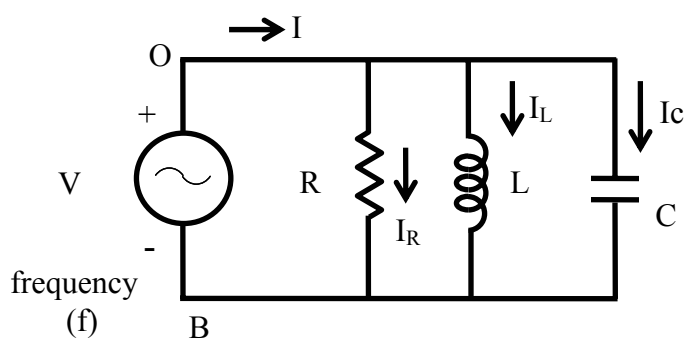

Fig. 17.4 (a) Circuit diagram.

$$Y\angle\phi = \frac{1}{R} + j\left(\omega C - \frac{1}{\omega L}\right)$$

where,

$$Y = \sqrt{\left[\frac{1}{R^2} + \left(\omega C - \frac{1}{\omega L}\right)^2\right]} \;;\quad \phi = \tan^{-1}\left[R\left(\omega C - \frac{1}{\omega L}\right)\right] \;;\quad \omega = 2\pi f$$

The impedance is $Z\angle -\phi = 1/Y\angle\phi$

The current is

$$I\angle\phi = V\angle 0^\circ \cdot Y\angle\phi = (V\cdot Y)\angle\phi = V\angle 0^\circ / Z\angle -\phi = (V/Z)\angle\phi$$

where, $I = V\sqrt{\left[\frac{1}{R^2} + \left(\omega C - \frac{1}{\omega L}\right)^2\right]}$

The current in the circuit is minimum, if $\omega C = \frac{1}{\omega L}$

The frequency under the above condition is

$$f_o = \frac{\omega_o}{2\pi} = \frac{1}{2\pi\sqrt{LC}}$$

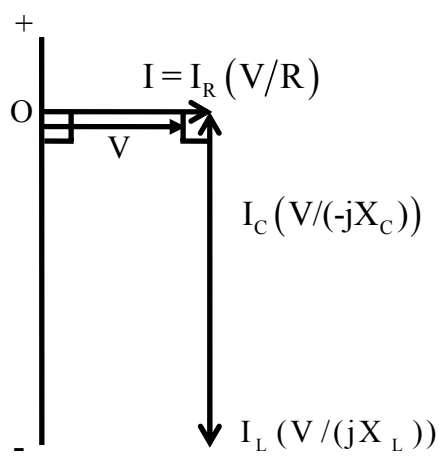

Fig. 17.4 (b) Phasor Diagram

This condition under which the magnitude of the total (supply) current is minimum, or the magnitude of the admittance is minimum (which means that the impedance is maximum), is called resonance. It may be noted that, for parallel circuit, the current or admittance is minimum (the impedance being maximum), while for series circuit, the current is maximum (the impedance being minimum). The frequency under this condition with the constant values of inductance L, and capacitance C, is called resonant frequency. If the capacitance is variable, and the frequency, f is kept constant, the value of the capacitance needed to produce this condition is

$$C = \frac{1}{\omega^2 L} = \frac{1}{(2\pi f)^2 L}$$

The magnitude of the impedance under the above condition is ($|Z| = R$), while the magnitude of the admittance is ($|Y| = G = (1/R)$). The reactive part of the admittance is

$B = 0$, as the susceptance (inductive) $B_L = (1/\omega L)$ is equal to the susceptance (capacitive) $B_C = \omega C$. The phase angle is $\phi = 0°$, and the power factor is unity ($\cos\phi = 1$). The total (supply) current is phase with the input voltage. So, the magnitude of the total current ($|(V/R)|$) in the circuit is only limited by resistance R. The phasor diagram is shown in Fig. 17.4b.

The magnitude of the current in the inductance, L / capacitance, C (both are equal, as the reactance are equal), is $V(1/\omega_o L) = V \cdot \omega_o C$. This may be termed as the circulating current in the circuit with only inductance and capacitance, the magnitude of which is

$$|I_L| = |I_C| = V\sqrt{\frac{C}{L}}$$

substituting the value of $\omega_o = 2\pi f_o$. This circulating current is smaller in magnitude than the input current or the current in the resistance as $\omega_o C = (1/\omega_o L) > R$.

The input current increases as the frequency is changed, i.e. increased or decreased from the resonant frequency ($f > f_o$, or $f < f_o$), i.e. $f \neq f_o$.

In the two cases of series and parallel circuits described earlier, all components, including the inductance, are assumed to be ideal, which means that the inductance is lossless, having no resistance. But, in actual case, specially with an iron-cored choke coil, normally a resistance r is assumed to be in series with the inductance L, to take care of the winding resistance and also the iron loss in the core. In an air-cored coil, the winding resistance may be small and no loss occurs in the air core.

An iron-cored choke coil is connected in parallel to capacitance, and the combination is fed to an ac supply (Fig. 17.5a).

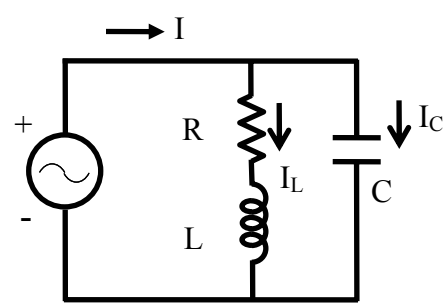

Fig. 17.5 (a) Circuit diagram.

The total admittance of the circuit is

$$Y = Y_1 + Y_2 = \frac{1}{r + j\omega L} + j\omega C = \frac{r - j\omega L}{r^2 + \omega^2 L^2} + j\omega C$$

If the magnitude of the admittance is to be minimum, then

$$\omega C = \frac{\omega L}{r^2 + \omega^2 L^2} \text{ or } C = \frac{L}{r^2 + \omega^2 L^2} .$$

The frequency is

$$f_o = \frac{\omega_o}{2\pi} = \frac{1}{2\pi}\sqrt{\frac{L}{C} - r^2}$$

This is the resonant frequency. The total admittance is $Y\angle 0° = \dfrac{r}{r^2 + \omega^2 L^2}$

The total impedance is $Z\angle 0° = \dfrac{r^2 + \omega^2 L^2}{r}$

The total (input) current is

$$I\angle 0° = \frac{V\angle 0°}{Z\angle 0°} = V\angle 0° \cdot Y\angle 0° = \left(\frac{V}{Z}\right)\angle 0° = (V \cdot Y)\angle 0° = \frac{V \cdot r}{r^2 + \omega^2 L^2}$$

This current is at unity power factor with $\phi = 0°$. The total current can be written as

$$I\angle 0° = I + j0 = I_L \angle -\phi_L + j I_C = I_L \cos\phi_L + j\left(I_L \sin\phi_L - I_C\right)$$

So, the condition is $I_C = I_L \sin\phi_l$

where $I_C = \dfrac{V}{X_C} = V \cdot \omega C$; $I_L = \dfrac{V}{\sqrt{r^2 + \omega^2 L^2}}$; $\sin\phi_L = \dfrac{\omega L}{\sqrt{r^2 + \omega^2 L^2}}$

From the above, the condition, as given earlier, can be obtained.

The total current is $I = I_L \cos\phi_L$

The value, as given here, can be easily obtained. The phasor diagram is shown in Fig. 17.5b. It may also be noted that the magnitude of the total current is minimum, while the magnitude of the impedance is maximum.

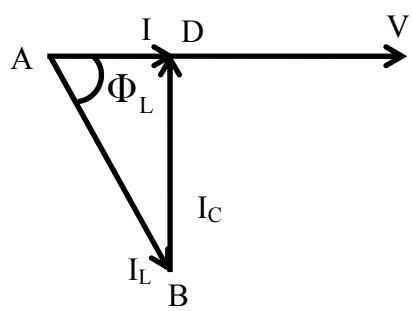

Fig. 17.5 (b) Phasor Diagram

Example 17.2

A coil, having a resistance of 15 Ω and an inductance of 0.75 H, is connected in series with a capacitor (Fig. 17.6a. The circuit draws maximum current, when a voltage of 200 V at 50 Hz is applied. A second capacitor is then connected in parallel to the circuit (Fig. 17.6b). What should be its value, such that the combination acts like a non-inductive resistance, with the same voltage (200 V) at 100 Hz? Calculate also the current drawn by the two circuits.

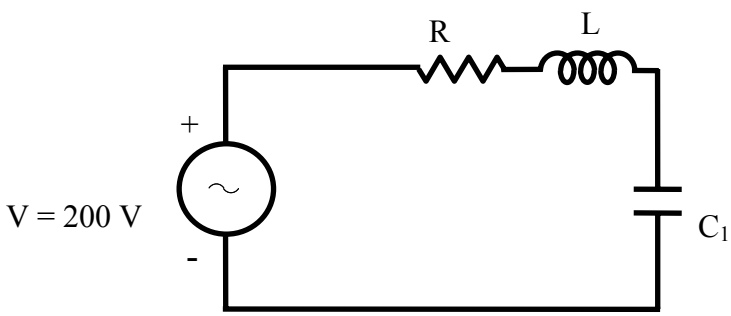

f_1 = 50Hz

Fig. 17.6 (a) Circuit diagram

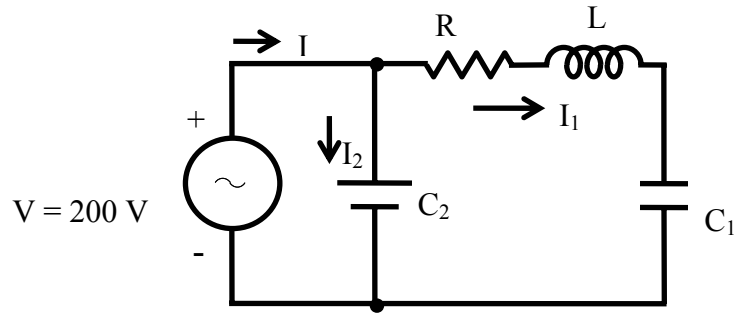

f_2 = 100Hz

Fig. 17.6 (b) Circuit diagram

Solution

f_1 = 50 Hz V = 200 V R = 15 Ω L = 0.75 H

From the condition of resonance at 50 Hz in the series circuit,

$$X_{L1} = \omega_1 L = 2\pi\ f_1\ L = X_{C1} = \frac{1}{\omega_1 C_1} = \frac{1}{2\pi\ f_1\ C_1}$$

So, $C_1 = \dfrac{1}{(2\pi\ f_1)^2 L} = \dfrac{1}{(2\pi \cdot 50)^2 \times 0.75} = 13.5 \cdot 10^{-6} = 13.5\,\mu F$

The maximum current drawn from the supply is, $I_{\max} = V / R = 200/15 = 13.33\,A$

f_2 = 100 Hz $\omega_2 = 2\pi\ f_2 = 2\pi \cdot 100 = 628.3\ rad/s$

$$X_{L2} = 2\pi\ f_2 L = 2\pi \cdot 100 \cdot 0.75 = 471.24\ \Omega$$

$$X_{C2} = \frac{1}{2\pi\ f_2 C_1} = \frac{1}{2\pi \cdot 100 \cdot 13.5 \cdot 10^{-6}} = 117.8.\ \Omega$$

$$Z_1 \angle \phi_1 = R + j\left(X_{L2} - X_{C2}\right) = 15 + j\,(471.24 - 117.8) = 15 + j\,353.44$$

$$= 353.75 \angle 87.57°\ \Omega$$

$$Y_1 \angle -\phi_1 = \frac{1}{Z_1 \angle \phi_1} = \frac{1}{15 + j\,353.44} = \frac{1}{353.75 \angle 87.57°} = 2.827 \cdot 10^{-3} \angle -87.57°$$

$$= (0.12 - j\,2.824) \cdot 10^{-3}\ \Omega^{-1}$$

$$Y_2 = 1/Z_2 = j\left(\omega_2\, C_2\right)$$

As the combination is resistive in nature, the total admittance is

$$Y \angle 0° = Y + j\,0 = Y_1 + Y_2 = (0.12 - j\,2.824) \cdot 10^{-3} + j\,\omega_2\, C_2$$

From the above expression, $\omega_2\, C_2 = 628.3 \cdot C_2 = 2.824 \cdot 10^{-3}$

or, $C_2 = \dfrac{2.824 \cdot 10^{-3}}{628.3} = 4.5 \cdot 10^{-6} = 4.5\,\mu F$

The total admittance is $Y = 0.12 \cdot 10^{-3}\ \Omega^{-1}$

The total impedance is $Z = 1/Y = 1/\left(0.12 \cdot 10^{-3}\right) = 8.33 \cdot 10^{3}\ \Omega = 8.33\ k\Omega$

The total current drawn from the supply is

$I = V \cdot Y = V / Z = 200 \times 0.12 \cdot 10^{-3} = 0.024\ A = 24 \cdot 10^{-3} = 24\ mA$

The phasor diagram for the circuit (Fig. 17.6b) is shown in Fig. 17.6c.

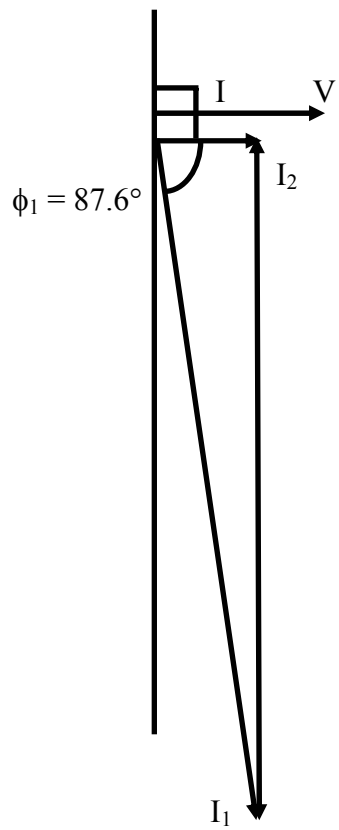

Fig. 17.6 (c) Phasor diagram

The condition for resonance in both series and parallel circuits fed from single phase ac supply is described. It is shown that the current drawn from the supply is at unity power factor (upf) in both cases. The value of the capacitor needed for resonant condition with a constant frequency supply, and the resonant frequency with constant value of capacitance, have been derived. Also taken up is the case of a lossy inductance coil in parallel with a capacitor under variable frequency supply, where the total current will be at upf. The quality factor of the coil and the bandwidth of the series circuit with known value of capacitance have been determined. This is the final lesson in this module of single phase ac circuits. In the next module, the circuits fed from three phase ac supply will be described.

Problems

17.1 A coil having a resistance of 20 Ω and inductance of 20 mH, in series with a capacitor is fed from a constant voltage variable frequency supply. The maximum current is 10 A at 100 Hz. Find the two cut-off frequencies, when the current is 0.71 A.

17.2 With the ac voltage source in the circuit shown in Fig. 17.7 operating a frequency of f, it was found that I =1.0 ∠0° A. When the source frequency was doubled (2f), the current became I = 0.707 ∠ – 45° A. Find:

a) The frequency f, and
b) The inductance L, and also the reactances, X_L and X_C at 2f

17.3 For the circuit shown in Fig. 17.8,

a) Find the resonant frequency f_0, if R = 250 Ω, and also calculate Q_0 (quality factor), BW (band width) in Hz, and lower and upper cut-off frequencies (f_1 and f_2) of the circuit.
b) Suppose it was desired to increase the selectivity, so that BW was 65 Hz. What value of R would accomplish this?

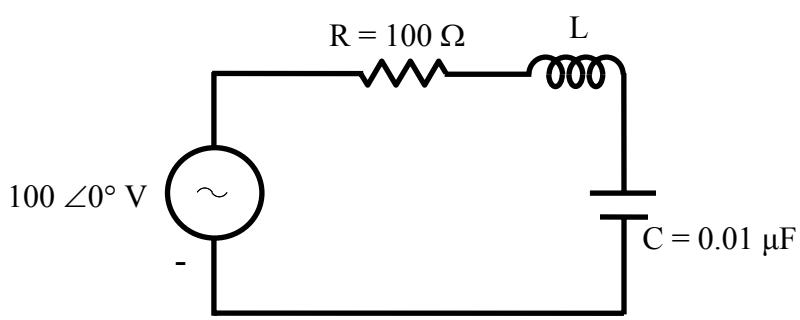

Fig. 17.7

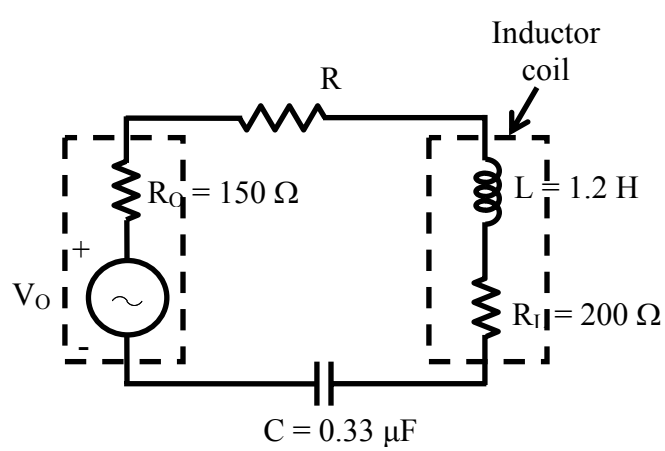

Fig. 17.8

17.4 (a) For the circuit shown in Fig. 17.9, show that the circulating current is given by $V.\sqrt{C/L}$, if R is small and V is the input voltage.

(b) Find the total current at

(i) resonant frequency, f_0, and

(ii) at a frequency, $f_1 = 0.9\ f_0$.

17.5 The circuit components of a parallel circuit shown in Fig. 17.10 are R = 60 kΩ, L = 5mH, and C = 50 pF. Find

a) the resonant frequency, f_0,

b) the quality factor, Q_0, and

c) the bandwidth.

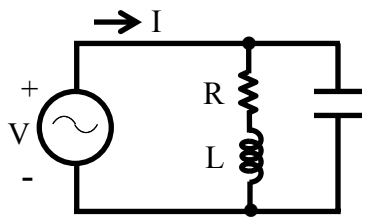

Fig. 17.9

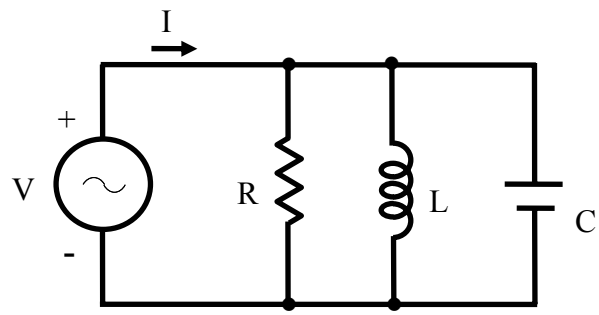

Fig. 17.10

List of Figures

Fig. 17.1 (a) Circuit diagram (R-L-C in series)
(b) Phasor diagram
Fig. 17.2 Variation of current under variable frequency supply
Fig. 17.3 Circuit diagram (Ex. 17.1)
Fig. 17.4 (a) Circuit diagram (R-L-C in parallel)
(b) Phasor diagram
Fig. 17.5 (a) Circuit diagram
(b) Phasor diagram
Fig. 17.6 (a) Circuit diagram (Ex. 17.2),
(b) Circuit diagram,
(c) Phasor diagram

Module 5

Three-phase AC Circuits

Lesson 18

Three-phase Balanced Supply

In the module, containing six lessons (12-17), the study of circuits, consisting of the linear elements – resistance, inductance and capacitance, fed from single-phase ac supply, has been presented. In this module, which may also be termed as an extension of the previous one, containing three lessons (18-20), the solution of currents in the balanced circuits, fed from three-phase ac supply, along with the measurement of power, will be described.

In this (first) lesson of this module, the generation of three-phase balanced voltages is taken up first. Then, the two types of connections (star and delta), normally used for the above supply, followed by line and phase quantities (voltages and currents) for the connections, in both supply and load sides (both being balanced), are described.

Keywords: Three-phase balanced voltage, star- and delta-connections, balanced load.

After going through this lesson, the students will be able to answer the following questions:

1. How to generate three-phase balanced voltages?
2. What are the two types of connections (star and delta) normally used for three-phase balanced supply?
3. What are meant by the terms – line and phase quantities (voltages and currents), for the two types of connections in both supply and load sides (both being balanced)?

Generation of Three-phase Balanced Voltages

In the first lesson (No. 12) of the previous module, the generation of single-phase voltage, using a multi-turn coil placed inside a magnet, was described. It may be noted that, the scheme shown was a schematic one, whereas in a machine, the windings are distributed in number of slots. Same would be the case with a normal three-phase generator. Three windings, with equal no. of turns in each one, are used, so as to obtain equal voltage in magnitude in all three phases. Also to obtain a balanced three-phase voltage, the windings are to be placed at an electrical angle of $120°$ with each other, such that the voltages in each phase are also at an angle of $120°$ with each other, which will be described in the next section. The schematic diagram with multi-turn coils, as was shown earlier in Fig. 12.1 for a single-phase one, placed at angle of $120°$ with each other, in a 2-pole configuration, is shown in Fig. 18.1a. The waveforms in each of the three windings (R, Y & B), are also shown in Fig. 18.1b. The windings are in the stator, with the poles shown in the rotor, which is rotating at a synchronous speed of N_s (r/min, or rpm), to obtain a frequency of $f = \left((p \cdot N_s)/120\right)$ (Hz), p being no. of poles [$p = 2$] (see lesson no. 12).

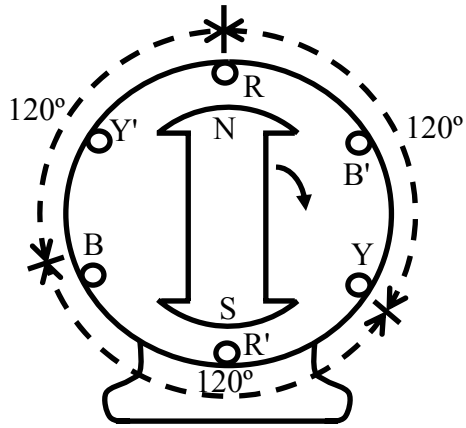

Fig. 18.1 (a) Schematic diagram of three windings of stator for the generation of three phased balanced voltage (2-pole rotor).

Three-phase Voltages for Star Connection

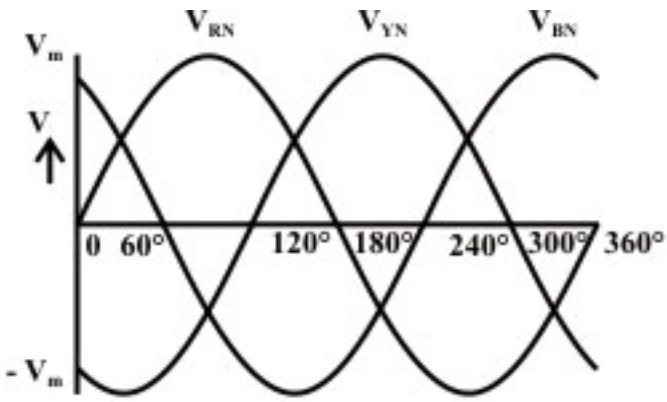

Fig. 18.1 (b)Three-phase balanced voltage waveforms with the source star-connected (the phase sequence, R-Y-B)

The connection diagram of a star (Y)-connected three-phase system is shown in Fig. 18.2a, along with phasor representation of the voltages (Fig. 18.2b). These are in continuation of the figures 18.1a-b. Three windings for three phases are R (+) & R'(−),Y (+) & Y'(−), and B (+) & Y'(−). Taking the winding of one phase, say phase R as an example, then R with sign (+) is taken as start, and R' with sign (−) is taken as finish. Same is the case with two other phases. For making star (Y)-connection, R', Y' & B' are connected together, and the point is taken as neutral, N. Three phase voltages are:

$$e_{RN} = E_m \sin\theta; \qquad e_{YN} = E_m \sin(\theta - 120°);$$

$$e_{BN} = E_m \sin(\theta - 240°) = E_m \sin(\theta + 120°)$$

It may be noted that, if the voltage in phase R (e_{RN}) is taken as reference as stated earlier, then the voltage in phase Y(e_{YN}) lags e_{RN} by $120°$, and the voltage in phase B(e_{BN}) lags e_{YN} by $120°$, or leads e_{RN} by $120°$. The phasors are given as:

$E_{RN} \angle 0° = E(1.0 + j0.0)$: $E_{YN} \angle -120° = E\ (-0.5 - j0.866)$;
$E_{BN} \angle +120° = E\ (-0.5 + j0.866)$.

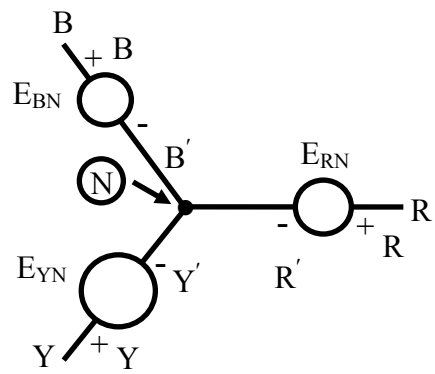

(a)

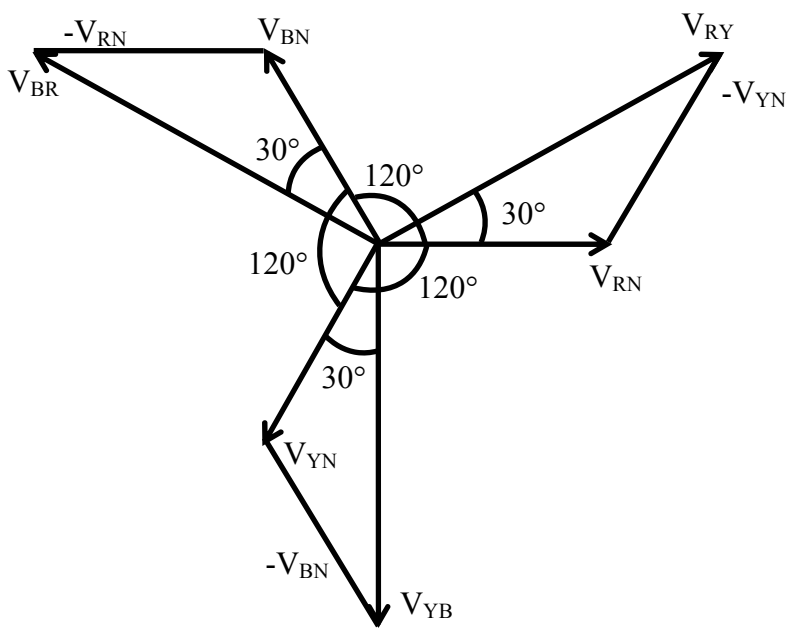

(b)

Fig. 18.2 (a) Three-phase balanced voltages, with the source star-connected (the phase sequence, R-Y-B)
(b) Phasor diagram of the line and phase voltages

The phase voltages are all equal in magnitude, but only differ in phase. This is also shown in Fig. 18.2b. The relationship between E and E_m is $E = E_m / \sqrt{2}$. The <u>phase</u> sequence is R-Y-B. It can be observed from Fig. 18.1b that the voltage in phase Y attains the maximum value, after $\theta = \omega \cdot t = 120°$ from the time or angle, after the voltage in

phase R attains the maximum value, and then the voltage in phase B attains the maximum value. The angle of lag or lead from the reference phase, R is stated earlier.

Reversal of phase sequence from R-Y-B to R-B-Y

If the phase sequence is reversed from R-Y-B to R-B-Y, the waveforms and the corresponding phasor diagram are shown in figures 18.3 (a-b) respectively. It can be observed from Fig. 18.3a that the voltage in phase B attains the maximum value, after $\theta = 120°$ from the time (or angle), after the voltage in phase R attains the maximum value, and then the voltage in phase Y attains the maximum value. The angle of lag or lead from the reference phase, R is stated earlier. The same sequence is observed in the phasor diagram (Fig. 18.3b), when the phase sequence is reversed to R-B-Y.

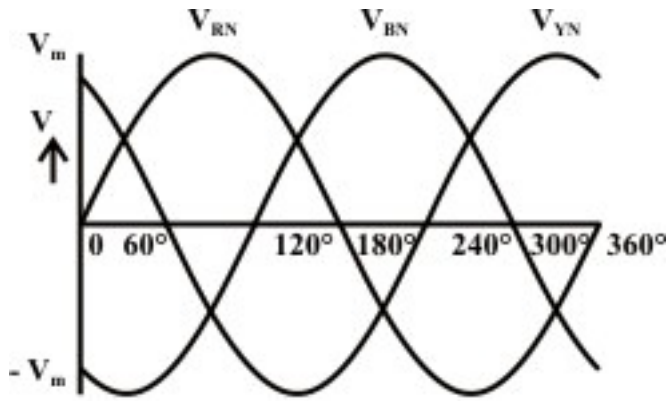

(a)

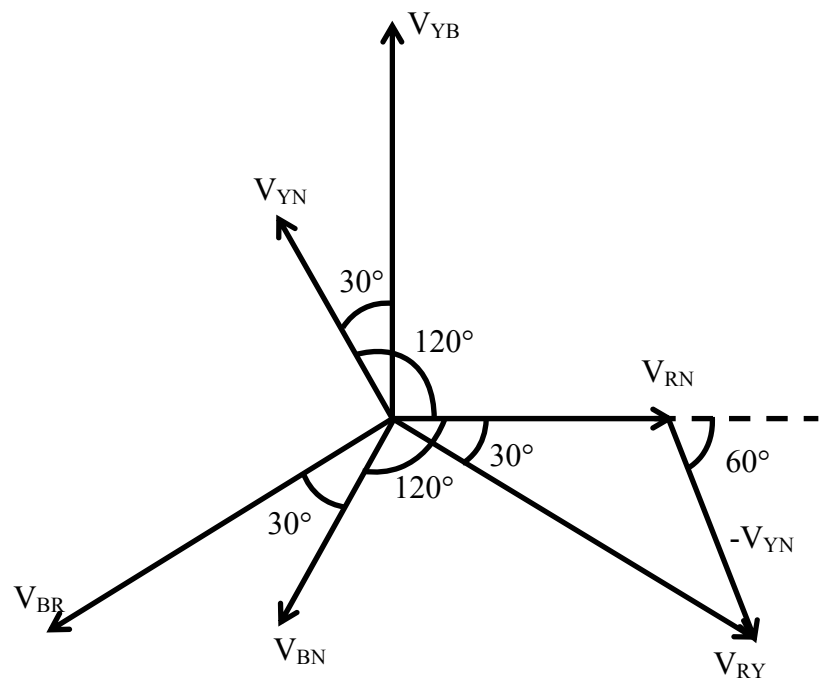

(b)

Fig. 18.3 (a) Three-phase balanced voltage waveforms with the source star-connected (the phase sequence, R-B-Y)
(b) Phasor diagram of the line and phase voltages

Relation between the Phase and Line Voltages for Star Connection

Three line voltages (Fig. 18.4) are obtained by the following procedure. The line voltage, E_{RY} is

$$E_{RY} = E_{RN} - E_{YN} = E\angle 0° - E\angle -120° = E\,[(1+j0)-(-0.5-j0.866)]$$
$$= E\,(1.5+j0.866) = \sqrt{3}\,E\angle 30°$$

The magnitude of the line voltage, E_{RY} is $\sqrt{3}$ times the magnitude of the phase voltage E_{RN}, and E_{RY} leads E_{RN} by $30°$. Same is the case with other two line voltages as shown in brief (the steps can easily be derived by the procedure given earlier).

$$E_{YB} = E_{YN} - E_{BN} = E\angle -120° - E\angle +120° = \sqrt{3}E\angle -90°$$
$$E_{BR} = E_{BN} - E_{RN} = E\angle +120° - E\angle 0° = \sqrt{3}E\angle +150°$$

So, the three line voltages are balanced, with their magnitudes being equal, and the phase angle being displaced from each other in sequence by $120°$. Also, the line voltage, say E_{RY}, <u>leads</u> the corresponding phase voltage, E_{RN} by $30°$

Relation between the Phase and Line Voltages for Delta Connection

The connection diagram of a delta (Δ)-connected three-phase system is shown in Fig. 18.4a, along with phasor representation of the voltages (Fig. 18.4b). For making delta (Δ)-connection, the start of one winding is connected to the finish of the next one in sequence, for instance, starting from phase R, R' is to connected to Y, and then Y' to B, and so on (Fig. 18.4a). The line and phase voltages are the same in this case, and are given as

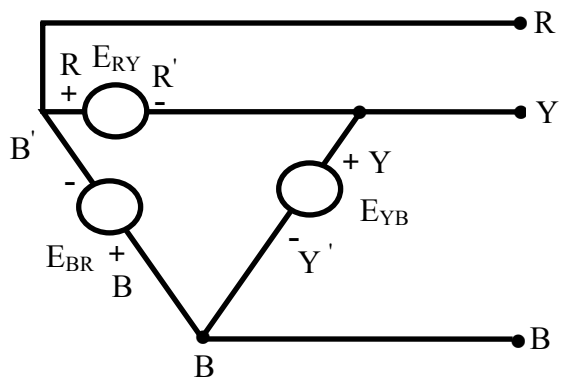

(a)

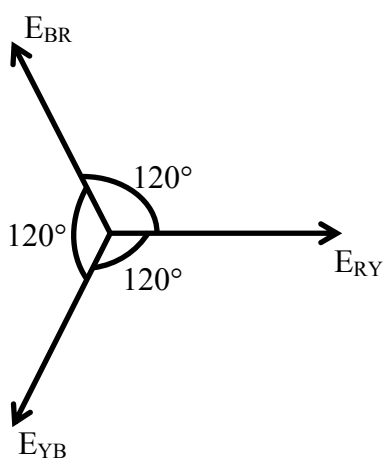

(b)

Fig. 18.4 (a) Three-phase balanced voltages, with the source delta-connected (the phase sequence, R-Y-B)

(b) Phasor diagram of the line and phase voltages

$E_{RY} = E\angle 0°$; $E_{YB} = E\angle -120°$; $E_{BR} = E\angle +120°$

If the phasor sum of the above three phase (or line) voltages are taken, the result is zero (0). The phase or line voltages form a balanced one, with their magnitudes being equal, and the phase being displaced from each other in sequence by $120°$.

Currents for Circuit with Balanced Load (Star-connected)

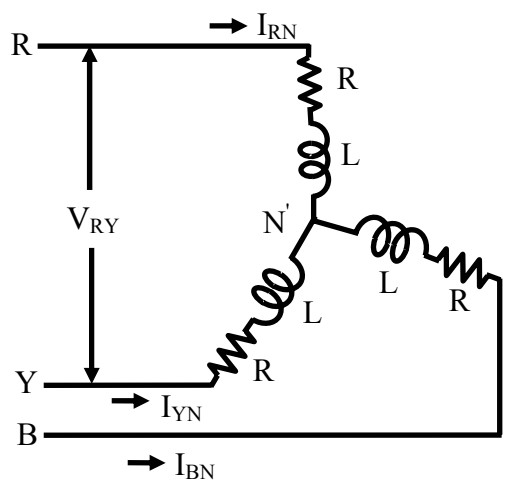

(a)

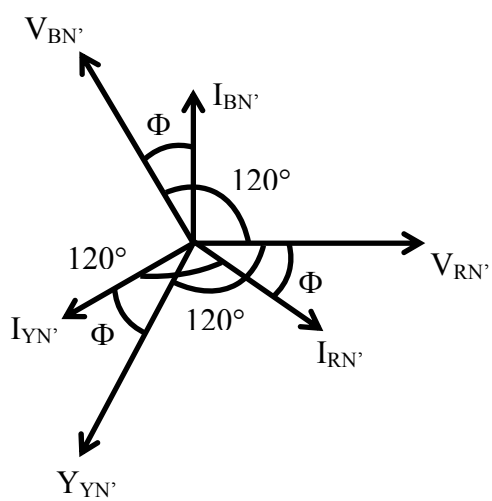

(b)

Fig. 18.5 (a) Circuit diagram for a three-phase balanced star-connected load
(b) Phasor diagram of the phase voltages, and the line & phase currents

A three-phase star (Y)-connected balanced load (Fig. 18.5a) is fed from a balanced three-phase supply, which may be a three-wire one. A balanced load means that, the magnitude of the impedance per phase, is same, i.e., $|Z_p| = |Z_{RN'}| = |Z_{YN'}| = |Z_{BN'}|$, and their angle is also same, as $\phi_p = \phi_{RN'} = \phi_{YN'} = \phi_{BN'}$. In other words, if the impedance per phase is given as, $Z_p \angle \phi_p = R_p + j\, X_p$, then $R_p = R_{RN'} = R_{YN'} = R_{BN'}$, and also

$X_p = X_{RN'} = X_{YN'} = X_{BN'}$. The magnitude and phase angle of the impedance per phase are: $Z_p = \sqrt{R_p^2 + X_p^2}$, and $\phi_p = \tan^{-1}\left(X_p / R_p\right)$. For balanced load, the magnitudes of the phase voltages, $|V_p| = |V_{RN'}| = |V_{YN'}| = |V_{BN'}|$ are same, as those of the source voltages per phase $|V_{RN}| = |V_{YN}| = |V_{BN}|$, if it is connected in star, as given earlier. So, this means that, the point N', star point on the load side is same as the star point, N of the load side. The phase currents (Fig. 18.5b) are obtained as,

$$I_{RN'} \angle -\phi_p = \frac{V_{RN} \angle 0°}{Z_{RN'} \angle \phi_p} = \frac{V_{RN}}{Z_{RN'}} \angle -\phi_p$$

$$I_{YN'} \angle -(120° + \phi_p) = \frac{V_{YN} \angle -120°}{Z_{YN'} \angle \phi_p} = \frac{V_{YN}}{Z_{YN'}} \angle -(120° + \phi_p)$$

$$I_{BN'} \angle (120° - \phi_p) = \frac{V_{BN} \angle +120°}{Z_{BN'} \angle \phi_p} = \frac{V_{BN}}{Z_{BN'}} \angle (120° - \phi_p)$$

In this case, the phase voltage, V_{RN} is taken as reference. This shows that the phase currents are equal in magnitude, i.e., ($|I_p| = |I_{RN'}| = |I_{YN'}| = |I_{BN'}|$), as the magnitudes of the voltage and load impedance, per phase, are same, with their phase angles displaced from each other in sequence by $120°$. The magnitude of the phase currents, is expressed as $|I_p| = \left|\left(V_p / Z_p\right)\right|$. These phase currents are also line currents ($|I_L| = |I_R| = |I_Y| = |I_B|$), in this case.

Total Power Consumed in the Circuit (Star-connected)

In the lesson No. 14 of the previous module, the power consumed in a circuit fed from a single-phase supply was presented. Using the same expression for the above star-connected balanced circuit, fed from three-phase supply (Fig. 18.4a-b), the power consumed per phase is given by

$$W_p = V_p \cdot I_p \cdot \cos\phi_p = V_p \cdot I_p \cdot \cos\left(V_p, I_p\right)$$

It has been shown earlier that the magnitude of the phase voltage is given by $|V_p| = |V_L| / \sqrt{3}$, where the magnitude of the line voltage is $|V_L|$. The magnitudes of the phase and line current are same, i.e., $|I_p| = |I_L|$. Substituting the two expressions, the total power consumed is obtained as

$$W = 3 \cdot \left(V_l / \sqrt{3}\right) \cdot I_L \cdot \cos\phi_p = \sqrt{3}\, V_L \cdot I_L \cdot \cos\phi_p$$

Please note that the phase angle, ϕ_p is the angle between the phase voltage V_p, and the phase current , I_p.

Before taking up an example, the formulas for conversion from delta-connected circuit to its star equivalent and vice versa (conversion from star to delta connection) using impedances, and also ideal inductances/capacitances, are presented here, starting with circuits with resistances, as derived in lesson #6 on dc circuits.

Delta(Δ)-Star(Y) conversion and Star-Delta conversion

Before taking up the examples, the formula for Delta(Δ)-Star(Y) conversion and also Star-Delta conversion, using impedances as needed, instead of resistance as elements, which is given in lesson #6 in the module on DC circuit, are presented. The formulas for delta-star conversion, using resistances (Fig. 18.6), are,

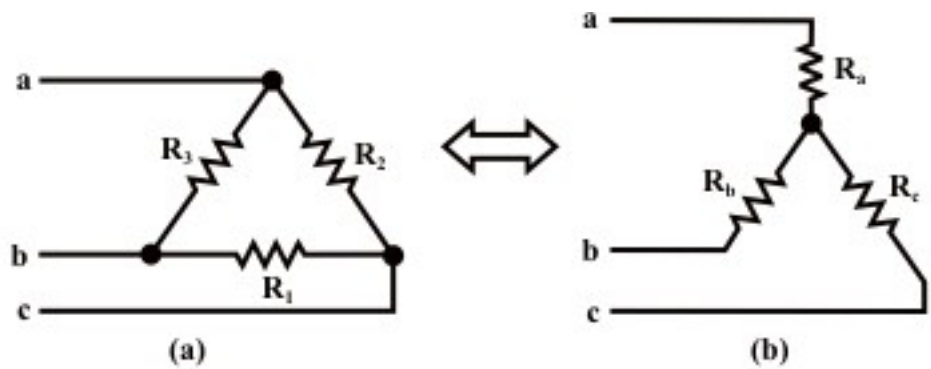

Fig. 18.6: Resistances connected (a) in delta, and (b) in star configurations

$$R_a = \frac{R_2\, R_3}{R_1 + R_2 + R_3} \qquad R_b = \frac{R_3\, R_1}{R_1 + R_2 + R_3} \qquad R_c = \frac{R_1\, R_2}{R_1 + R_2 + R_3}$$

The formulas for delta-star conversion, using resistance, are,

$$R_1 = R_b + R_c + \frac{R_b R_c}{R_a} = \frac{R_a R_b + R_b R_c + R_c R_a}{R_a}$$

$$R_2 = R_c + R_a + \frac{R_c R_a}{R_b} = \frac{R_a R_b + R_b R_c + R_c R_a}{R_b}$$

$$R_3 = R_a + R_b + \frac{R_a R_b}{R_c} = \frac{R_a R_b + R_b R_c + R_c R_a}{R_c}$$

The derivation of these formulas is given in lesson #6. If three equal resistances ($R_1 = R_2 = R_3 = R$) connected in delta, are converted into its equivalent star, the resistances obtained are equal, its value being $R_a = R_b = R_c = (R/3) = R'$, which is derived using formulas given earlier. Similarly, if three equal resistances connected in star, are converted into its equivalent delta, the resultant resistances, using formulas, are equal ($R_1 = R_2 = R_3 = 3 \cdot R' = 3 \cdot (R/3) = R$).

The formula for the above conversions using impedances, instead of resistances, are same, replacing resistances by impedances, as the formula for series and parallel combination using impedances, instead of resistances, remain same as shown in the previous module on ac single phase circuits.

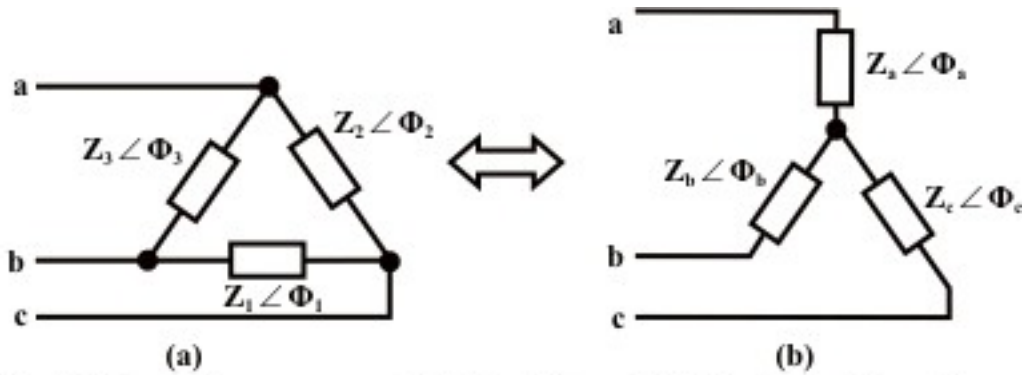

Fig. 18.7: Impedances connected (a) in delta, and (b) in star configurations

The formulas for delta-star conversion, using impedances (Fig. 18.7), are,

$$Z_a = \frac{Z_2 Z_3}{Z_1 + Z_2 + Z_3} \qquad Z_b = \frac{Z_3 Z_1}{Z_1 + Z_2 + Z_3} \qquad Z_c = \frac{Z_1 Z_2}{Z_1 + Z_2 + Z_3}$$

The formulas for delta-star conversion, using impedance, are,

$$Z_1 = Z_b + Z_c + \frac{Z_b Z_c}{Z_a} = \frac{Z_a Z_b + Z_b Z_c + Z_c Z_a}{Z_a}$$

$$Z_2 = Z_c + Z_a + \frac{Z_c Z_a}{Z_b} = \frac{Z_a Z_b + Z_b Z_c + Z_c Z_a}{Z_b}$$

$$Z_3 = Z_a + Z_b + \frac{Z_a Z_b}{Z_c} = \frac{Z_a Z_b + Z_b Z_c + Z_c Z_a}{Z_c}$$

Please note that all the impedances used in the formula given here are complex quantities, like $Z_1 \angle \phi_1, \cdots, Z_a \angle \phi_a, \cdots$, having both magnitude and angle as given. The formulas can be derived by the same procedure as given in lesson #6.

An example is taken up, when three equal impedances connected in delta are to be converted into its equivalent star. The impedances are equal, both in magnitude and angle, such that $|Z_1| = |Z_2| = |Z_3| = |Z|$, and $\phi_1 = \phi_2 = \phi_3 = \phi$. The impedances connected in delta are of the form $Z \angle \phi = R \pm j X$. Using the formula given here, the impedances of the star equivalent are also equal, having the magnitude as
$|Z_a| = |Z_b| = |Z_b| = (|Z|/3) = |Z'|$ and angle as $\phi_a = \phi_b = \phi_c = \phi$.
The angles of the equivalent impedance connected in star are equal to the angles of the impedances connected in delta. The impedances connected in delta are also equal, both in magnitude and angle, and are of the form $Z' \angle \phi = (Z/3) \angle \phi = (R/3) \pm j(X/3)$.
Similarly, if three equal impedances connected in star are converted into its equivalent delta, the magnitude and angle of the impedances using the formulas given here, are
$|Z_1| = |Z_2| = |Z_3| = (3 \cdot |Z'|) = |Z|$ and $\phi_1 = \phi_2 = \phi_2 = \phi$ respectively. This shows that three impedances are equal, both in magnitude and angle, with its value being
$Z \angle \phi = (3 \cdot Z') \angle \phi = [3 \cdot (R/3)] \pm j[3 \cdot (X/3)] = R \pm j X$
which can also be obtained simply from the result given earlier.

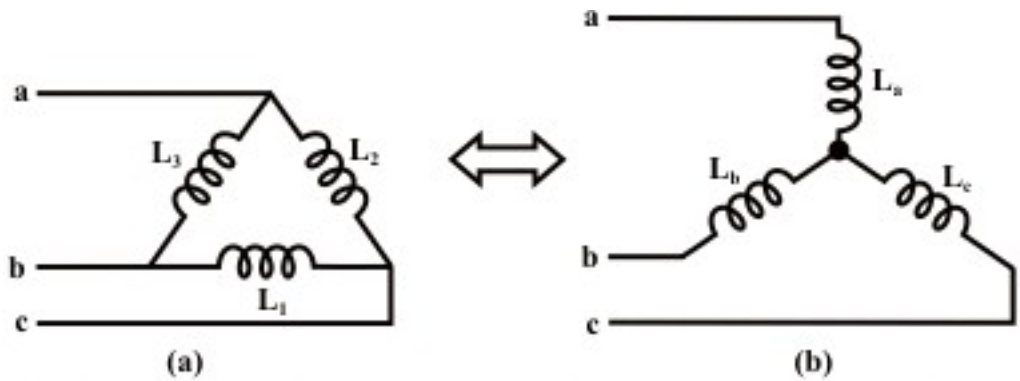

Fig. 18.8: Inductances (ideal) connected (a) in delta, and (b) in star configurations

Now, let us use the above formula for the circuits (Fig. 18.8), using inductances only. The symbols used for the inductances are same ($L_1, \cdots, L_a, \cdots$). The impedances of the inductances connected in delta, are computed as $Z_1 \angle \phi_1 = 0.0 + j\omega L_1 = X_1 \angle 90°$, the angles in three cases are $90°$. The magnitudes of the impedances are proportional to the respective inductances as $|Z_1| = X_1 \propto L_1$. Converting the combination into its equivalent star, the inductances using the formulas given here, are

$$L_a = \frac{L_2 L_3}{L_1 + L_2 + L_3} \qquad L_b = \frac{L_3 L_1}{L_1 + L_2 + L_3} \qquad L_c = \frac{L_1 L_2}{L_1 + L_2 + L_3}$$

These relations can also be derived. Further, these are of the same form, as has been earlier obtained for resistances. It may be observed here that the formulas for series and parallel combination using inductances, instead of resistances, remain same, as shown in the previous module on ac single phase circuits, and also can be derived from first principles, such as relationship of induced emf in terms of inductance, as compared with Ohm's law for resistance. The inductances are all ideal, i.e. lossless, having no resistive component. The formulas for star-delta conversion using inductances (conversion of star-connected inductances into its equivalent delta) are,

$$L_1 = L_b + L_c + \frac{L_b L_c}{L_a} = \frac{L_a L_b + L_b L_c + L_c L_a}{L_a}$$

$$L_2 = L_c + L_a + \frac{L_c L_a}{L_b} = \frac{L_a L_b + L_b L_c + L_c L_a}{L_b}$$

$$L_3 = L_a + L_b + \frac{L_a L_b}{L_c} = \frac{L_a L_b + L_b L_c + L_c L_a}{L_c}$$

These are of the same form as derived for circuits with resistances.

If three equal inductances ($L_1 = L_2 = L_3 = L$) connected in delta, are converted into its equivalent star, the inductances obtained are equal, its value being $L_a = L_b = L_c = (L/3) = L'$, which is derived using formulas given earlier. Similarly, if three equal inductances connected in star, are converted into its equivalent delta, the resultant inductances, using formulas, are equal ($L_1 = L_2 = L_3 = 3 \cdot L' = 3 \cdot (L/3) = L$).

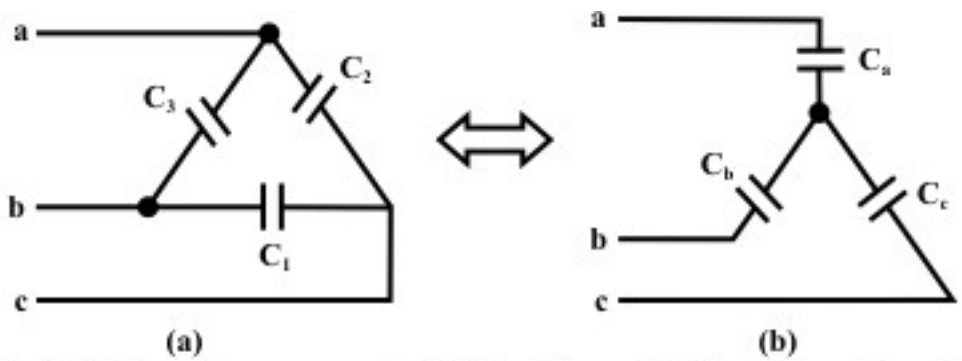

Fig. 18.9: Capacitances connected (a) in delta, and (b) in star configurations

The formulas for the circuits (Fig. 18.9) using capacitances are derived here. The symbols used for the capacitances are same ($C_1, \cdots, C_a, \cdots$). The impedances of the inductances connected in delta, are computed as $Z_1 \angle \phi_1 = 0.0 - jX_C = X_1 \angle -90°$, the angles in three cases are ($-90°$). The magnitudes of the impedances are inversely proportional to the respective capacitances as, $|Z_1| = X_C = X_1 = (1/\omega C) \propto (1/C_1)$. Converting the combination into its equivalent star, the resultant capacitances using the formulas given here, are

$$1/C_a = \frac{(1/C_2)(1/C_3)}{1/C_1 + 1/C_2 + 1/C_3}$$

or $$C_a = \frac{C_1 C_2 + C_2 C_3 + C_3 C_1}{C_1} = C_2 + C_3 + \frac{C_2 C_3}{C_1}$$

Similarly,

$$C_b = C_3 + C_1 + \frac{C_3 C_1}{C_2} = \frac{C_1 C_2 + C_2 C_3 + C_3 C_1}{C_2}$$

$$C_c = C_1 + C_2 + \frac{C_1 C_2}{C_3} = \frac{C_1 C_2 + C_2 C_3 + C_3 C_1}{C_3}$$

The capacitances in this case are all ideal, without any loss, specially at power frequency, which is true in nearly all cases, except otherwise stated. The formulas for star-delta conversion using capacitances (conversion of star-connected capacitances into its equivalent delta) are,

$$1/C_1 = \frac{(1/C_a)(1/C_b) + (1/C_b)(1/C_c) + (1/C_c)(1/C_a)}{1/C_a}$$

or $$C_1 = \frac{C_b C_c}{C_a + C_b + C_c}$$

Similarly,

$$C_2 = \frac{C_c C_a}{C_a + C_b + C_c} \qquad C_3 = \frac{C_a C_b}{C_a + C_b + C_c}$$

If three equal capacitances ($C_1 = C_2 = C_3 = C$) connected in delta, are converted into its equivalent star, the capacitances obtained are equal, its value being

$C_a = C_b = C_c = (3 \cdot C) = C'$, which is derived using formulas given earlier. Similarly, if three equal capacitances connected in star, are converted into its equivalent delta, the resultant capacitances, using formulas, are equal ($C_1 = C_2 = C_3 = C'/3 = (3 \cdot C)/3 = C$).

The formulas for conversion of three equal inductances/capacitances connected in delta into its equivalent star and vice versa (star-delta conversion) can also be obtained from the formulas using impedances as shown earlier, only by replacing inductance with impedance, and for capacitance by replacing it reciprocal of impedance (in both cases using magnitude of impedance only, as the angles are equal ($90°$ for inductance and $-90°$ for capacitance). Another point to note is left for observation by the reader. Please have a close look at the formulas needed for delta-star conversion and vice versa (star-delta conversion) for capacitances, including those with equal values of capacitances, and then compare them with the formulas needed for such conversion using resistances/inductances (may be impedances also). The rules for conversion of capacitances in series/parallel into its equivalent one can be compared to the rules for conversion of resistances/inductances in series/parallel into its equivalent one.

The reader is referred to the comments given after the example 18.1.

Example 18.1

The star-connected load consists of a resistance of 15 Ω, in series with a coil having resistance of 5 Ω, and inductance of 0.2 H, per phase. It is connected in parallel with the delta-connected load having capacitance of 90 μF per phase (Fig. 18.10a). Both the loads being balanced, and fed from a three-phase, 400 V, 50 Hz, balanced supply, with the phase sequence as R-Y-B. Find the line current, power factor, total power & reactive VA, and also total volt-amperes (VA).

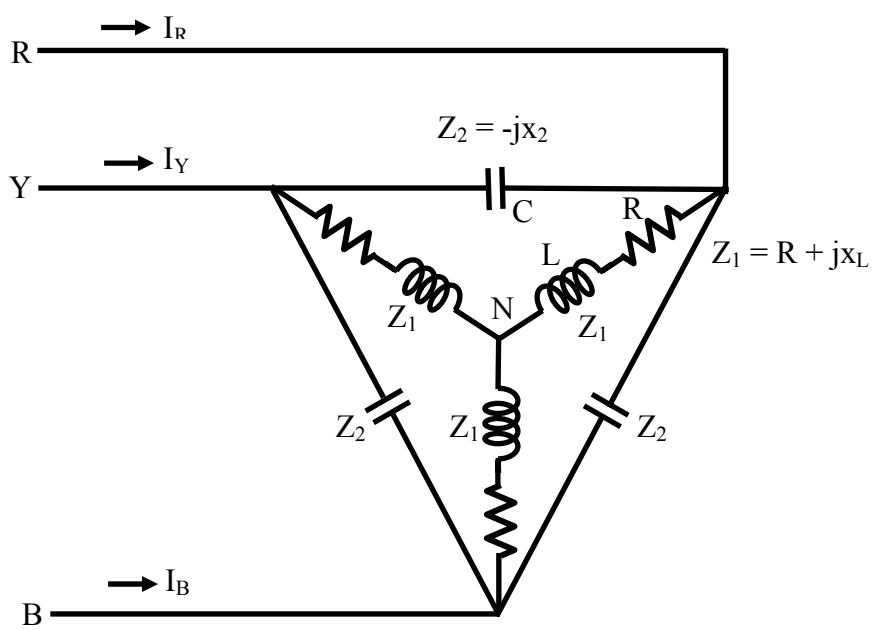

(a)

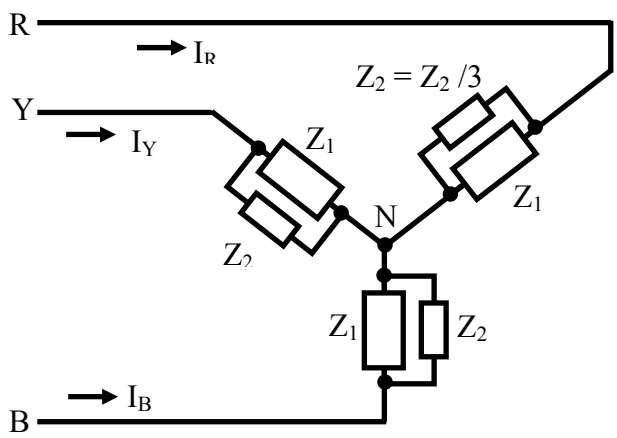

(b)

Fig. 18.10 (a) Circuit diagram (Example 18.1)
(b) Equivalent balanced star-connected circuit

Solution

$f = 50\ Hz$ $\qquad \omega = 2\pi f = 2\times\pi\times 50 = 314.16\ rad/s$

For the balanced star-connected load, $R = 15\ \Omega$

For the inductance coil, $r = 5\ \Omega$ $\qquad X_L = \omega L = 314.16\times 0.2 = 62.83\ \Omega$

with the above values taken per phase.

The impedance per phase is,

$Z_1 = R + (r + jX_L) = 15 + (5 + j62.83) = (20 + j62.83) = 65.94\angle 72.34°\ \Omega$

For the balanced delta-connected load, $C = 90\ \mu F$

Converting the above load into its equivalent star, $C_1 = C/3 = 90/3 = 30\ \mu F$

$X_{C1} = 1/\omega C_1 = 1/(314.16\times 30\times 10^{-6}) = 106.1\ \Omega$

The impedance per phase is $Z_2' = -j106.1 = 106.1\angle -90°$

In the equivalent circuit for the load (Fig. 18.10b), the two impedances, Z_1 & Z_2' are in parallel. So, the total admittance per phase is,

$$Y_p = Y_1 + Y_2' = \frac{1}{Z_1} + \frac{1}{Z_2'} = \frac{1}{65.94\angle +72.34°} + \frac{1}{106.1\angle -90°}$$

$$= 0.01517\angle -72.34° + 0.009425\angle +90° = [(4.6 - j14.46) + j9.425]\times 10^{-3}$$

$$= (4.6 - j5.03)\times 10^{-3} = 0.006816\angle -47.56°\ \ \Omega^{-1}$$

The total impedance per phase is,

$Z_p = 1/Y_p = 1/(0.006816\angle -47.56°) = 146.71\ \angle +47.56° = (99.0 + j108.27)\ \Omega$

The phasor diagram is shown in Fig. 18.10c.

Taking the phase voltage, V_{RN} as reference,

$|V_{RN}| = |V_p| = |V_L|/\sqrt{3} = 400/\sqrt{3} = 231.0\ V$

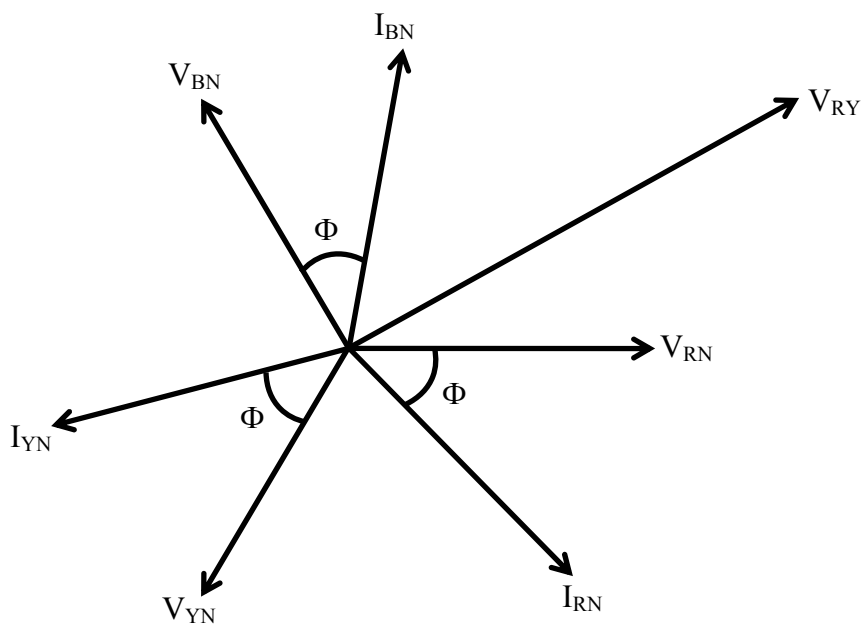

Fig. 18.10 (c) Phasor diagram

The phase voltages are,

$V_{RN} = 231.0\angle 0°$; $V_{YN} = 231.0\angle -120°$; $V_{BN} = 231.0\angle +120°$

So, the phase current, I_{RN} is,

$$I_{RN} = \frac{V_{RN}}{Z_p} = \frac{231.0\ \angle 0°}{146.71\ \angle +47.56°} = 1.575\ \angle -47.56° = (1.0625 - j1.162)\ A$$

The two other phase currents are,

$I_{YN} = 1.575\angle -167.56°$; $I_{BN} = 1.575\angle +72.44°$

As the total circuit (Fig. 18.5b) is taken as star-connected, the line and phase currents are same, i.e., $|I_L| = |I_p| = 1.575\ A$

Also, the phase angle of the total impedance is positive.

So, the power factor is $\cos\phi_p = \cos 47.56° = 0.675\ lag$

The total volt-amperes is $S = 3\cdot V_p \cdot I_p = 3\times 231\times 1.575 = 1.0915\ kVA$

The total VA is also obtained as $S = \sqrt{3}\cdot V_L \cdot I_L = \sqrt{3}\times 400\times 1.575 = 1.0915\ kVA$

The total power is $P = 3\cdot V_p \cdot I_p \cdot \cos\phi_p = 3\times 231\times 1.575\times 0.675 = 737\ W$

The total reactive volt-amperes is,

$Q = 3\cdot V_p \cdot I_p \cdot \sin\phi_p = 3\times 231\times 1.575\times \sin 47.56° = 805\ VAR$

This example can be solved by converting the star-connected part into its equivalent delta, as shown in Example 19.1 (next lesson). A simple example (20.1) of a balanced star-connected load is also given in the last lesson (#20) of this module.

After starting with the generation of three-phase balanced voltage system, the phase and line voltages, both being balanced, first for star-connection, and then for delta-connection (both on source side), are discussed. The currents (both phase and line) for

balanced star-connected load, along with total power consumed, are also described in this lesson. An example is given in detail. In the next lesson, the currents (both phase and line) for balanced delta-connected load will be presented.

Problems

18.1 A balance load of (16+j12)Ω per phase, connected in star, is fed from a three-phase, 230V supply. Find the line current, power factor, total power, reactive VA and total VA.

18.2 Find the three voltages $V_{an,}$ $V_{bn,}$ & $V_{cn,}$ in the circuit shown in Fig. 18.11. The circuit components are: R = 10 Ω, jX_L = j17.3 Ω.

List of Figures

Fig. 18.1 (a) Schematic diagram of three windings of stator for the generation of three phased balanced voltages (2-pole rotor).

(b) Three-phase balanced voltage waveforms with the source star-connected (the phase sequence, R-Y-B)

Fig. 18.2 (a) Three-phase balanced voltages, with the source star-connected (the phase sequence, R-Y-B)

(b) Phasor diagram of the line and phase voltages

Fig. 18.3 (a) Three-phase balanced voltage waveforms for the phase sequence, R-B-Y

(b) Phasor diagram of the line and phase voltages

Fig. 18.4 (a) Three-phase balanced voltages, with the source delta-connected (the phase sequence, R-Y-B)

(b) Phasor diagram of the line and phase voltages

Fig. 18.5 (a) Circuit diagram for a three-phase balanced star-connected load

(b) Phasor diagram of the phase voltages, and the line & phase currents

Fig. 18.6 Resistances connected in (a) Delta and (b) Star configurations

Fig. 18.7 Impedances connected in (a) Delta and (b) Star configurations

Fig. 18.8 Inductances connected in (a) Delta and (b) Star configurations

Fig. 18.9 Capacitances connected in (a) Delta and (b) Star configurations

Fig. 18.10 (a) Circuit diagram (Example 18.1)

(b) Equivalent balanced star-connected circuit

(c) Phasor diagram

Module 5

Three-phase AC Circuits

Lesson 19

Three-phase Delta-Connected Balanced Load

In the previous (first) lesson of this module, the two types of connections (star and delta), normally used for the three-phase balanced supply in source side, along with the line and phase voltages, are described. Then, for balanced star-connected load, the phase and line currents, along with the expression for total power, are obtained. In this lesson, the phase and line currents for balanced delta-connected load, along with the expression for total power, will be presented.

Keywords: line and phase currents, star- and delta-connections, balanced load.

After going through this lesson, the students will be able to answer the following questions:

1. How to calculate the currents (line and phase), for the delta-connected balanced load fed from a three-phase balanced system?

2. Also how to find the total power fed to the above balanced load, for the two types of load connections – star and delta?

Currents for Circuits with Balanced Load (Delta-connected)

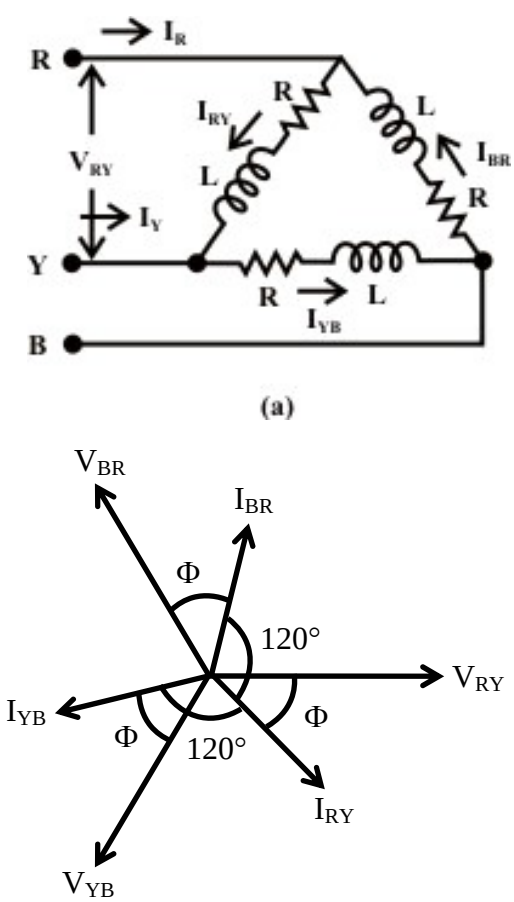

Fig. 19.1 (a) Balanced delta-connected load fed from a three-phase balanced supply
(b) Phasor diagram

A three-phase delta (Δ)-connected balanced load (Fig. 19.1a) is fed from a balanced three-phase supply. A balanced load means that, the magnitude of the impedance per phase, is same, i.e., $|Z_p| = |Z_{RY}| = |Z_{YB}| = |Z_{BR}|$, and their angle is also same, as $\phi_p = \phi_{RY} = \phi_{YB} = \phi_{BR}$. In other words, if the impedance per phase is given as, $Z_p \angle\phi_p = R_p + j\,X_p$, then $R_p = R_{RY} = R_{YB} = R_{BR}$, and also $X_p = X_{RY} = X_{Yb} = X_{BR}$. The magnitude and phase angle of the impedance per phase are: $Z_p = \sqrt{R_p^2 + X_p^2}$, and $\phi_p = \tan^{-1}(X_p / R_p)$.In this case, the magnitudes of the phase voltages $|V_p|$ are same, as those of the line voltages $|V_L| = |V_{RY}| = |V_{YB}| = |V_{BR}|$. The phase currents (Fig. 19.1b) are obtained as,

$$I_{RY} \angle -\phi_p = \frac{V_{RY} \angle 0°}{Z_{RY} \angle \phi_p} = \frac{V_{RY}}{Z_{RY}} \angle -\phi_p$$

$$I_{YB} \angle -(120° + \phi_p) = \frac{V_{YN} \angle -120°}{Z_{YB} \angle \phi_p} = \frac{V_{YB}}{Z_{YB}} \angle -(120° + \phi_p)$$

$$I_{BR} \angle (120° - \phi_p) = \frac{V_{BR} \angle +120°}{Z_{BR} \angle \phi_p} = \frac{V_{BR}}{Z_{BR}} \angle (120° - \phi_p)$$

In this case, the phase voltage, V_{RY} is taken as reference. This shows that the phase currents are equal in magnitude, i.e., ($|I_p| = |I_{RY}| = |I_{YB}| = |I_{BR}|$), as the magnitudes of the voltage and load impedance, per phase, are same, with their phase angles displaced from each other in sequence by $120°$. The magnitude of the phase currents, is expressed as $|I_p| = |(V_p / Z_p)|$.

The line currents (Fig. 19.1b) are given as

$$I_R \angle -\theta_R = I_{RY} - I_{BR} = I_p \angle(-\phi_p) - I_p \angle(120° - \phi_p) = \sqrt{3}\, I_p \angle -(30° + \phi_p)$$
$$= I_L \angle -(30° + \phi_p)$$

$$I_Y \angle -\theta_Y = I_{YB} - I_{RY} = I_p \angle -(120° + \phi_p) - I_p \angle(-\phi_p) = \sqrt{3}\, I_p \angle -(150° + \phi_p)$$
$$= I_L \angle -(150° + \phi_p)$$

$$I_B \angle -\theta_B = I_{BR} - I_{YB} = I_p \angle(120° - \phi_p) - I_p \angle -(120° + \phi_p) = \sqrt{3}\, I_p \angle(90° - \phi_p)$$
$$= I_L \angle(90° - \phi_p)$$

The line currents are balanced, as their magnitudes are same and $\sqrt{3}$ times the magnitudes of the phase currents ($|I_L| = \sqrt{3} \cdot |I_p|$), with the phase angles displaced from each other in sequence by $120°$. Also to note that the line current, say I_R, lags the corresponding phase current, I_{RY} by $30°$.

If the phase current, I_{RY} is taken as reference, the phase currents are

$I_{RY} \angle 0° = I_p\,(1.0 + j0.0)$: $\qquad$ $I_{YB} \angle -120° = I_p\,(-0.5 - j0.866)$;

$I_{BR} \angle +120° = I_p\,(-0.5 + j0.866)$.

The line currents are obtained as

$$I_R = I_{RY}\angle 0° - I_{BR}\angle +120° = I_p\{(1.0 + j0.0) - (-0.5 + j0.866)\} = I_p(1.5 - j0.866)$$
$$= \sqrt{3}\, I_p \angle -30° = I_L \angle -30°$$
$$I_Y = I_{YB}\angle -120° - I_{RY}\angle 0° = I_p\{(-0.5 - j0.866) - (1.0 + j0.0)\} = -I_p(1.5 + j0.866)$$
$$= \sqrt{3}\, I_p \angle -150° = I_L \angle -150°$$
$$I_B = I_{BR}\angle +120° - I_{YB}\angle -120° = I_p\{(-0.5 + j\ 0.866) - (-0.5 - j0.866)\}$$
$$= I_p(j1.732) = \sqrt{3}\, I_p \angle +90° = I_L \angle +90°$$

Total Power Consumed in the Circuit (Delta-connected)

In the last lesson (No. 18), the equation for the power consumed in a star-connected balanced circuit fed from a three-phase supply, was presented. The power consumed per phase, for the delta-connected balanced circuit, is given by

$$W_p = V_p \cdot I_p \cdot \cos\phi_p = V_p \cdot I_p \cdot \cos\left(V_p, I_p\right)$$

It has been shown earlier that the magnitudes of the phase and line voltages are same, i.e., $|V_p| = |V_L|$. The magnitude of the phase current is $(1/\sqrt{3})$ times the magnitude of the line current, i.e., $|I_p| = \left(|I_L|/\sqrt{3}\right)$. Substituting the two expressions, the total power consumed is obtained as

$$W = 3 \cdot V_L \cdot \left(I_L/\sqrt{3}\right) \cdot \cos\phi_p = \sqrt{3}\, V_L \cdot I_L \cdot \cos\phi_p$$

It may be observed that the phase angle, ϕ_p is the angle between the phase voltage V_p, and the phase current, I_p. Also that the expression for the total power in a three-phase balanced circuit is the same, whatever be the type of connection – star or delta.

Example 19.1

The star-connected load having impedance of $(12 - j16)\ \Omega$ per phase is connected in parallel with the delta-connected load having impedance of $(27 + j18)\ \Omega$ per phase (Fig. 19.2a), with both the loads being balanced, and fed from a three-phase, 230 V, balanced supply, with the phase sequence as R-Y-B. Find the line current, power factor, total power & reactive VA, and also total volt-amperes (VA).

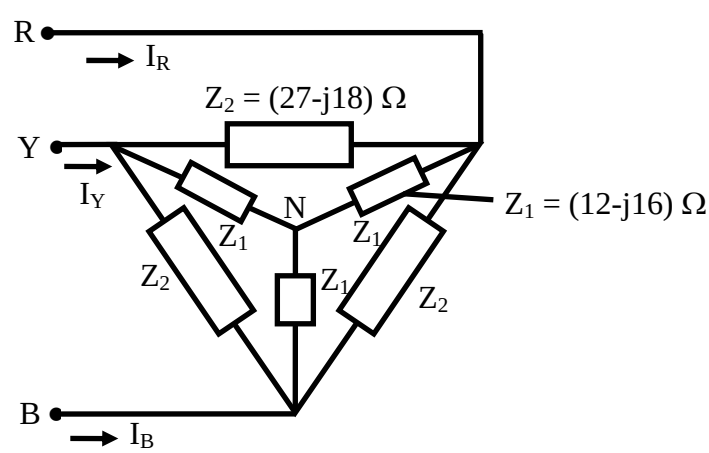

(a)

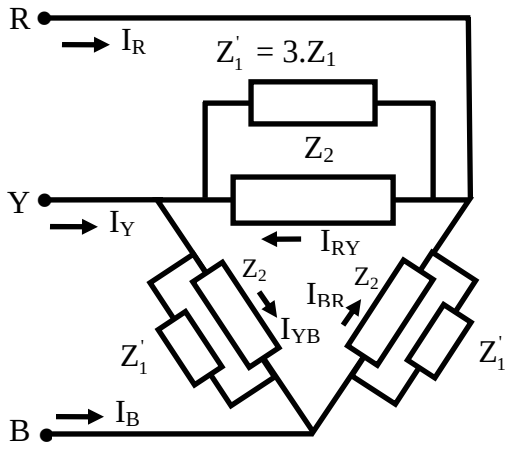

(b)

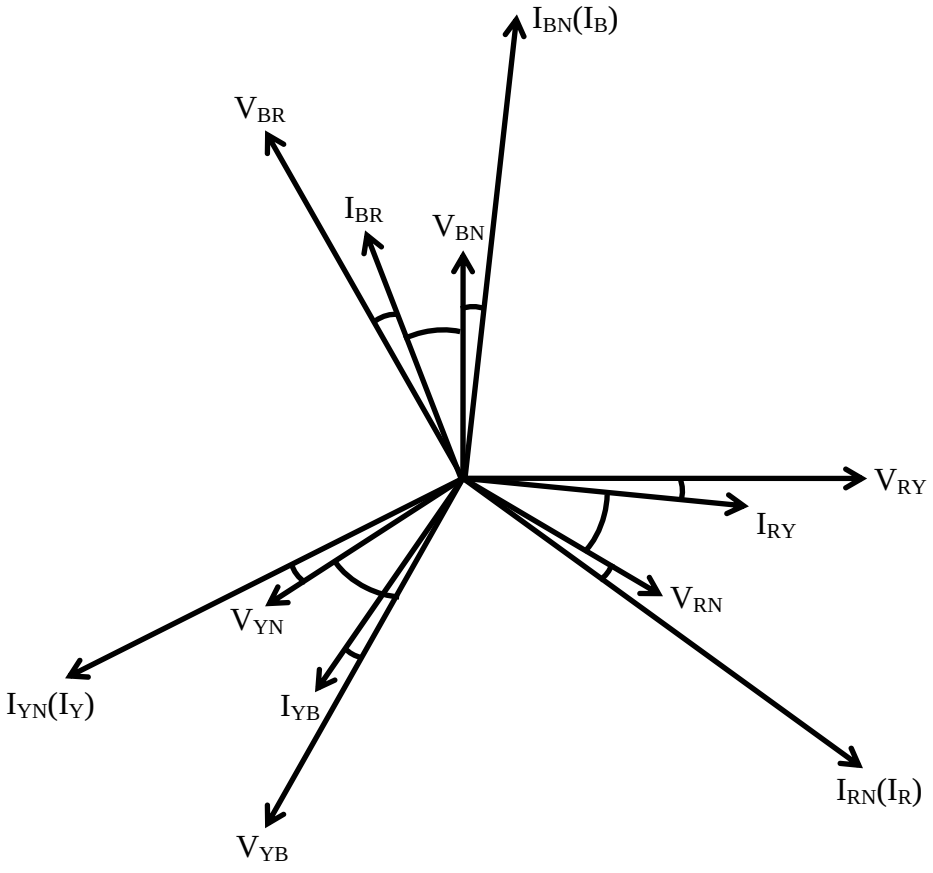

(c)

Fig. 19.2 (a) Circuit diagram (Example 19.1)
(b) Equivalent circuit (delta-connected)
(c) Phasor diagram

Solution

For the balanced star-connected load, the impedance per phase is,

$Z_1 = (12 - j16) = 20.0 \angle -53.13° \ \Omega$

The above load is converted into its equivalent delta. The impedance per phase is,

$Z_1' = 3 \cdot Z_1 = 3 \times (12 - j16) = (36 - j48) = 60.0 \angle -53.13° \ \Omega$

For the balanced delta-connected load, the impedance per phase is,

$Z_2 = (27 + j18) = 32.45 \angle +33.69° \ \Omega$

In the equivalent circuit for the load (Fig. 19.2b), the two impedances, Z_1' & Z_2 are in parallel. So, the total admittance per phase is,

$$Y_p = Y_1' + Y_2 = \frac{1}{Z_1'} + \frac{1}{Z_2} = \frac{1}{60.0 \angle -53.13°} + \frac{1}{32.45 \angle +33.69°}$$

$$= 0.0167 \angle +53.13° + 0.03082 \angle -33.69°$$

$$= [(0.01 + j0.01333) + (0.02564 - j0.017094)] = (0.03564 - j0.003761)$$

$$= 0.03584 \angle -6.024° \ \Omega^{-1}$$

The total impedance per phase is,

$Z_p = 1/Y_p = 1/(0.03584 \angle -6.024°) = 27.902 \angle +6.024° = (27.748 + j\ 2.928) \ \Omega$

The phasor diagram is shown in Fig. 19.2c.

Taking the line voltage, V_{RY} as reference, $V_{RY} = 230 \angle 0° \ V$

The other two line voltages are,

$V_{YB} = 230 \angle -120° \ ; \qquad V_{BR} = 230 \angle +120°$

For the equivalent delta-connected load, the line and phase voltages are same.

So, the phase current, I_{RY} is,

$$I_{RY} = \frac{V_{RY}}{Z_p} = \frac{230.0 \angle 0°}{27.902 \angle +6.024°} = 8.243 \angle -6.024° = (8.198 - j\ 0.8651) \ A$$

The two other phase currents are,

$I_{YB} = 8.243 \angle -126.024° \ ; \qquad I_{BR} = 8.243 \angle +113.976°$

The magnitude of the line current is $\sqrt{3}$ times the magnitude of the phase current.

So, the line current is $|I_L| = \sqrt{3} \cdot |I_p| = \sqrt{3} \times 8.243 = 14.277 \ A$

The line current, I_R lags the corresponding phase current, I_{RY} by $30°$.

So, the line current, I_R is $I_R = 14.277 \angle -36.024° \ A$

The other two line currents are,

$I_Y = 14.277 \angle -156.024° \ ; \qquad I_B = 14.277 \angle +83.976°$

Also, the phase angle of the total impedance is positive.

So, the power factor is $\cos \phi_p = \cos 6.024° = 0.9945 \ lag$

The total volt-amperes is $S = 3 \cdot V_p \cdot I_p = 3 \times 230 \times 8.243 = 5.688 \ kVA$

The total VA is also obtained as $S = \sqrt{3} \cdot V_L \cdot I_L = \sqrt{3} \times 230 \times 14.277 = 5.688 \ kVA$

The total power is $P = 3 \cdot V_p \cdot I_p \cdot \cos \phi_p = 3 \times 230 \times 8.243 \times 0.9945 = 5.657 \ kW$

The total reactive volt-amperes is,

$Q = 3 \cdot V_p \cdot I_p \cdot \sin \phi_p = 3 \times 230 \times 8.243 \times \sin 6.024° = 597.5 \ VAR$

An alternative method, by converting the delta-connected part into its equivalent star is given, as shown earlier in Ex. 18.1.

For the balanced star-connected load, the impedance per phase is,

$Z_1 = (12 - j16) = 20.0 \angle -53.13° \ \Omega$

For the balanced delta-connected load, the impedance per phase is,

$Z_2 = (27 + j18) = 32.45 \angle +33.69° \ \Omega$

Converting the above load into its equivalent star, the impedance per phase is,

$Z_2' = Z_2 / 3 = (27 + j18)/3 = (9 + j6) = 10.817 \angle +33.69° \ \Omega$

In the equivalent circuit for the load, the two impedances, Z_1 & Z_2' are in parallel.

So, the total admittance per phase is,

$$Y_p = Y_1 + Y_2' = \frac{1}{Z_1} + \frac{1}{Z_2'} = \frac{1}{20.0\angle -53.13°} + \frac{1}{10.817\angle +33.69°}$$

$$= 0.05\angle +53.13° + 0.09245\angle -33.69° = [(0.03 + j0.04) + (0.0769 - j0.05128)]$$

$$= (0.1069 - j0.01128) = 0.1075 \angle -6.0235° \ \Omega^{-1}$$

The total impedance per phase is,

$Z_p = 1/Y_p = 1/(0.1075\angle -6.0235°) = 9.3023 \angle +6.0235° = (9251 + j0.976) \ \Omega$

The phasor diagram is shown in Fig. 18.5c. The magnitude of the phase voltage is,

$|V_{RN}| = |V_p| = |V_L| / \sqrt{3} = 230/\sqrt{3} = 132.8 \ V$

The line voltage, V_{RY} is taken as reference as given earlier. The corresponding phase voltage, V_{RN} lags V_{RY} by $30°$. So, the phase voltage, V_{RN} is $V_{RN} = 132.8\angle -30°$

The phase current, I_{RN} is,

$$I_{RN} = \frac{V_{RN}}{Z_p} = \frac{132.8 \angle -30°}{9.3023 \angle +6.0235°} = 14.276 \angle -36.0235° \ A$$

As the total load is taken as star-connected, the line and phase currents are same, in this case. The phase angle of the total impedance is positive, with is value as $\phi = 6.0235°$. The power factor is $\cos 6.0235° = 0.9945 \ lag$

The total volt-amperes is $S = 3 \cdot V_p \cdot I_p = 3 \times 132.8 \times 14.276 = 5.688 \ kVA$

The remaining steps are not given, as they are same as shown earlier.

Example 19.2

A balanced delta-connected load with impedance per phase of $(16 - j12)\ \Omega$ shown in Fig. 19.3a, is fed from a three-phase, 200 V balanced supply with phase sequence as A-B-C. Find the voltages, V_{ab} , V_{bc} & V_{ca}, and show that they (voltages) are balanced.

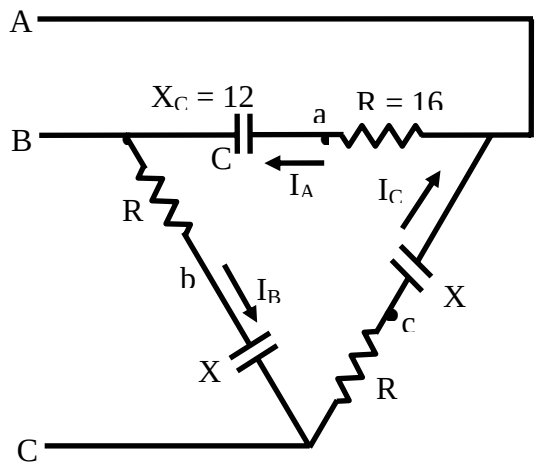

(a)

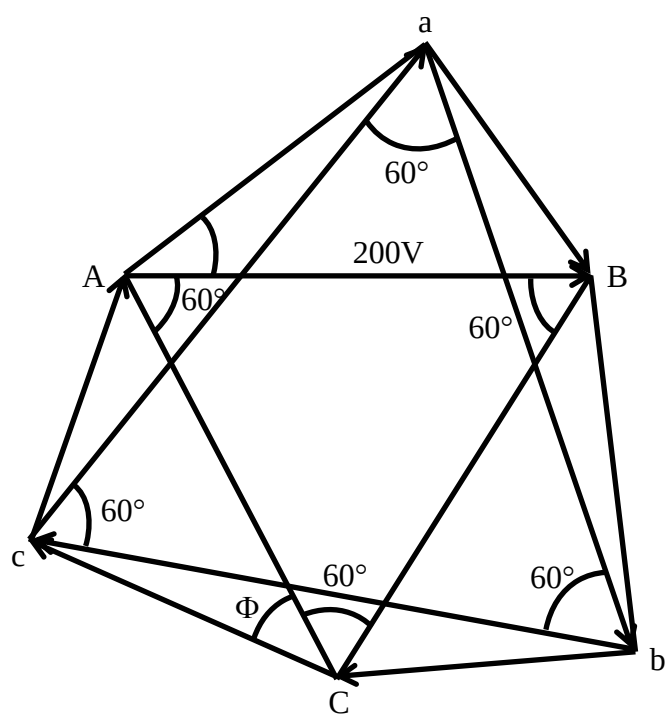

(b

Fig. 19.3 (a) Circuit diagram (Example 19.2)
(b) Phasor diagram

Solution

$R_p = 16\ \Omega \quad ; \qquad X_{Cp} = 12\ \Omega$

$Z_{AB} = Z_p = R_p - j\,X_{Cp} = 16 - j12 = 20\ \angle -36.87°\ \ \Omega$

For delta-connected load, $|V_L| = |V_p| = 200\ \ V$

Taking the line or phase voltage V_{AB} as reference, the line or phase voltages are,

$V_{AB} = 200\ \angle 0°\ ; \qquad V_{BC} = 200\ \angle -120°\ ; \qquad V_{CA} = 200\ \angle +120°$

The phasor diagram is shown in Fig. 19.3b. The phase current, I_{AB} is,

$I_{AB} = V_{AB} / Z_p = (200\ \angle 0°)/(20\ \angle -36.87°) = 10.0\ \angle +36.87° = (8.0 + j\,6.0)\ \ A$

The other two phase currents are,

$I_{BC} = 10.0\ \angle -83.13° = (1.196 - j\,9.928)\ \ A$

$I_{CA} = 10.0\ \ \angle +156.87° = (-9.196 + j\,3.928)\ \ A$

The voltage, V_{ab} is,

$V_{ab} = V_{aB} + V_{Bb} = (-j\,X_{Cp}) \cdot I_{AB} + R_p \cdot I_{BC}$

$= (12 \times 10)\angle(36.87° - 90°) + (16 \times 10)\angle -83.13° = 120\angle -53.13° + 160\angle -83.13°$

$= (72.0 - j\,96.0) + (19.14 - j\,158.85) = (91.14 - j\,254.85) = 270.66\angle -70.32°\ \ V$

Alternatively,

$V_{ab} = (-j\,12) \times (8.0 + j\,6.0) + 16 \times (1.196 - j\,9.928) = (91.14 - j\,254.85)$

$= 270.66\angle -70.32°\ \ V$

Similarly, the voltage, V_{bc} is,

$V_{bc} = V_{bC} + V_{Cc} = (-j\,X_{Cp}) \cdot I_{BC} + R_p \cdot I_{CA}$

$= (12 \times 10)\angle -(83.13° + 90°) + (16 \times 10)\angle 156.87° = 120\angle -173.13° + 160\angle 156.87°$

$= -(119.14 + j\,14.35) + (-147.14 + j\,62.85) = (-266.28 + j\,48.5)$

$= 270.66\angle +169.68\ \ V$

In the same way, the voltage, V_{ca} is obtained as $V_{ca} = 270.66\angle +49.68°\ \ V$

The steps are not shown here.

The three voltages, as computed, are equal in magnitude, and also at phase difference of $120°$ with each other in sequence. So, the three voltages can be termed as balanced ones.

A simple example (20.3) of a balanced delta-connected load is given in the following lesson

The phase and line currents for a delta-connected balanced load, fed from a three-phase supply, along with the total power consumed, are discussed in this lesson. Also some worked out problems (examples) are presented. In the next lesson, the measurement of power in three-phase circuits, both balanced and unbalanced, will be described.

Problems

19.1 A balanced load of (9-j6) Ω per phase, connected in delta, is fed from a three phase, 100V supply. Find the line current, power factor, total power, reactive VA and total VA.

19.2 Three star-connected impedances, Z_1 = (8-jb) Ω per phase, are connected in parallel with three delta-connected impedances, Z_2 = (30+j15) Ω per phase, across a three-phase 230V supply. Find the line current, total power factor, total power, reactive VA, and total VA.

List of Figures

Fig. 19.1 (a) Balanced delta-connected load fed from a three-phase balanced supply
(b) Phasor diagram

Fig. 19.2 (a) Circuit diagram (Example 19.1)
(b) Equivalent circuit (delta-connected)
(c) Phasor diagram

Fig. 19.3 (a) Circuit diagram (Example 19.2)
(b) Phasor diagram

Module 5

Three-phase AC Circuits

Lesson 20

Measurement of Power in a Three-phase Circuit

In the previous lesson, the phase and line currents for balanced delta-connected load fed from a three-phase supply, along with the expression for total power, are presented. In this lesson, the measurement of total power in a three-phase circuit, both balanced and unbalanced, is discussed. The connection diagram for two-wattmeter method, along with the relevant phasor diagram for balanced load, is described.

Keywords: power measurement, two-wattmeter method, balanced and unbalanced loads, star- and delta-connections.

After going through this lesson, the students will be able to answer the following questions:

1. How to connect the two-wattmeter to measure the total power in a three-phase circuit – both balanced and unbalanced?

2. Also how to find the power factor for the case of the above balanced load, from the reading of the two-wattmeter, for the two types of connections – star and delta?

Two-wattmeter Method of Power Measurement in a Three-phase Circuit

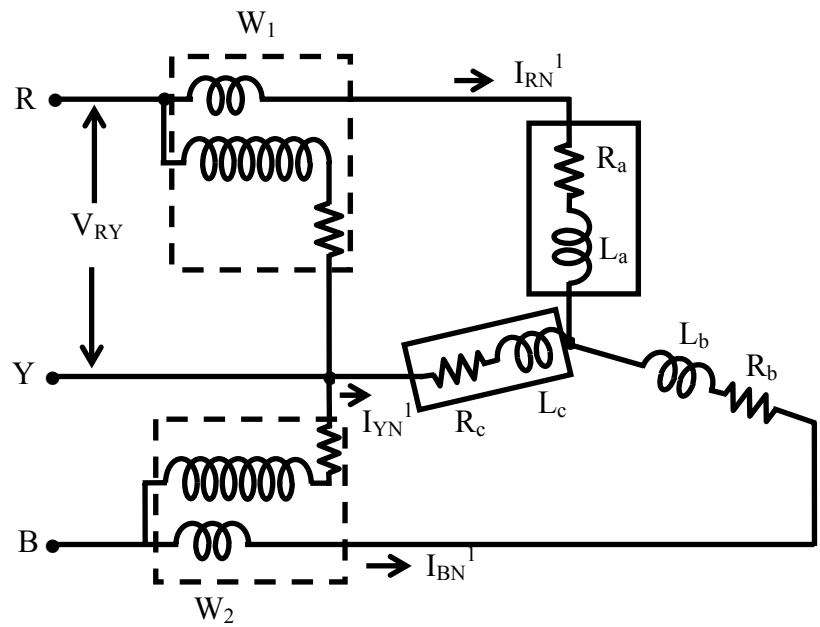

Fig. 20.1 Connection diagram for two-wattmeter method of power measurement in a three-phase balanced system with star-connected load

The connection diagram for the measurement of power in a three-phase circuit using two wattmeters, is given in Fig. 20.1. This is irrespective of the circuit connection – star or delta. The circuit may be taken as unbalanced one, balanced type being only a special case. Please note the connection of the two wattmeters. The current coils of the wattmeters, 1 & 2, are in series with the two phases, $R \,\&\, B$, with the pressure or voltage

coils being connected across $R-Y$ and $B-Y$ respectively. Y is the third phase, in which no current coil is connected.

If star-connected circuit is taken as an example, the total instantaneous power consumed in the circuit is,

$$W = i_{RN'} \cdot v_{RN'} + i_{YN'} \cdot v_{YN'} + i_{BN'} \cdot v_{BN'}$$

Each of the terms in the above expression is the instantaneous power consumed for the phases. From the connection diagram, the current in, and the voltage across the respective (current, and pressure or voltage) coils in the wattmeter, W_1 are $i_{RN'}$ and $v_{RY} = v_{RN'} - v_{YN'}$. So, the instantaneous power measured by the wattmeter, W_1 is,

$$W_1 = i_{RN'} \cdot v_{RY} = i_{RN'} \cdot \left(v_{RN'} - v_{YN'}\right)$$

Similarly, the instantaneous power measured by the wattmeter, W_2 is,

$$W_2 = i_{BN'} \cdot v_{BY} = i_{BN'} \cdot \left(v_{BN'} - v_{YN'}\right)$$

The sum of the two readings as given above is,

$$W_1 + W_2 = i_{RN'} \cdot \left(v_{RN'} - v_{YN'}\right) + i_{BN'} \cdot \left(v_{BN'} - v_{YN'}\right) = i_{RN'} \cdot v_{RN'} + i_{BN'} \cdot v_{BN'} - v_{YN'} \cdot \left(i_{RN'} + i_{BN'}\right)$$

Since, $i_{RN'} + i_{YN'} + i_{BN'} = 0$ or, $i_{YN'} = \left(i_{RN'} + i_{BN'}\right)$

Substituting the above expression for $i_{YN'}$ in the earlier one,

$$W_1 + W_2 = i_{RN'} \cdot v_{RN'} + i_{BN'} \cdot v_{BN'} + i_{YN'} \cdot v_{YN'}$$

If this expression is compared with the earlier expression for the total instantaneous power consumed in the circuit, they are found to be the same. So, it can be concluded that the sum of the two wattmeter readings is the total power consumed in the three-phase circuit, assumed here as a star-connected one. This may also be easily proved for delta-connected circuit. As no other condition is imposed, the circuit can be taken as an unbalanced one, the balanced type being only a special case, as stated earlier.

Phasor diagram for a three-phase balanced star-connected circuit

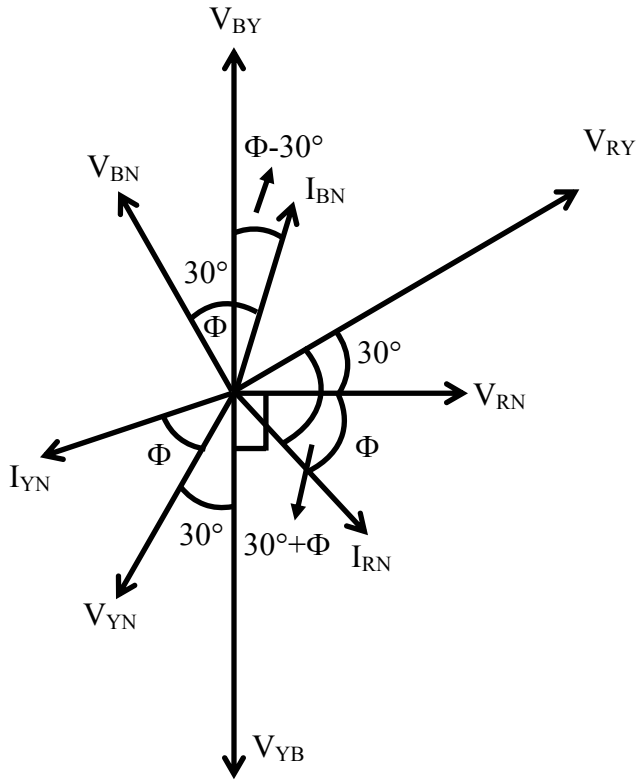

Fig. 20.2 Phasor diagram for two-wattmeter method of power measurement in a three-phase system with balanced star-connected load

The phasor diagram using the two-wattmeter method, for a three-phase balanced star-connected circuit is shown in Fig. 20.2. Please refer to the phasor diagrams shown in the figures 18.4 &18.6b. As given in lesson No. 18, the phase currents lags the respective phase voltages by $\phi = \phi_p$, the angle of the load impedance per phase. The angle, ϕ is taken as positive for inductive load. Also the neutral point on the load (N') is same as the neutral point on the source (N), if it is assumed to be connected in star. The voltage at that point is zero (0).

The reading of the first wattmeter is,

$$W_1 = V_{RY} \cdot I_{RN} \cdot \cos(V_{RY}, I_{RN}) = V_{RY} \cdot I_{RN} \cdot \cos(30° + \varphi) = \sqrt{3} \cdot V_p \cdot I_p \cdot \cos(30° + \varphi)$$

The reading of the second wattmeter is,

$$W_2 = V_{BY} \cdot I_{BN} \cdot \cos(V_{BY}, I_{BN}) = V_{BY} \cdot I_{BN} \cdot \cos(30° - \varphi) = \sqrt{3} \cdot V_p \cdot I_p \cdot \cos(30° - \varphi)$$

The line voltage, V_{RY} leads the respective phase voltage, V_{RN} by $30°$, and the phase voltage, V_{RN} leads the phase current, I_{RN} by ϕ. So, the phase difference between V_{RY} & I_{RN} is $(30° + \phi)$. Similarly, the phase difference between V_{BY} & I_{BN} in the second case, can be found and also checked from the phasor diagram.

The sum of the two wattmeter readings is,

$$W_1 + W_2 = \sqrt{3} \cdot V_p \cdot I_p \cdot [\cos(30° + \varphi) + \cos(30° - \varphi)] = \sqrt{3} \cdot V_p \cdot I_p \cdot 2 \cdot \cos 30° \cdot \cos\phi$$

$$= 3 \cdot V_p \cdot I_p \cdot \cos\phi = \sqrt{3} \cdot V_L \cdot I_L \cdot \cos\phi$$

So, ($W_1 + W_2$) is equal to the total power consumed by the balanced load.
This method is also valid for balanced delta-connected load, and can be easily obtained. The phasor diagram for this case is shown in the example No. 20.2.

*Determination of **power factor** for the balanced load*

The difference of the two wattmeter readings is,

$$W_2 - W_1 = \sqrt{3} \cdot V_p \cdot I_p \cdot [\cos(30° - \varphi) - \cos(30° + \varphi)] = \sqrt{3} \cdot V_p \cdot I_p \cdot 2 \cdot \sin 30° \cdot \sin\phi$$

$$= \sqrt{3} \cdot V_p \cdot I_p \cdot \sin\ \phi$$

If the two sides is multiplied by $\sqrt{3}$, we get

$$\sqrt{3} \cdot (W_2 - W_1) = 3 \cdot V_p \cdot I_p \cdot \sin\ \phi = \sqrt{3} \cdot V_L \cdot I_L \cdot \sin\ \phi$$

From the two expressions, we get,

$$\frac{W_2 - W_1}{W_2 + W_1} = \frac{1}{\sqrt{3}} \cdot \tan\phi \qquad \text{or,} \qquad \phi = \tan^{-1}\left[\sqrt{3} \cdot \left(\frac{W_2 - W_1}{W_2 + W_1}\right)\right]$$

The power factor, $\cos\phi$ of the balanced load can be obtained as given here, using two wattmeter readings.

$$\cos\phi = \frac{1}{\sqrt{(1 + \tan^2\phi)}} = \frac{1}{\sqrt{\left[1 + 3 \cdot \left(\frac{W_2 - W_1}{W_2 + W_1}\right)^2\right]}} = \frac{1}{\sqrt{\left[1 + 3 \cdot \left(\frac{1 - y}{1 + y}\right)^2\right]}}$$

where, $y = \dfrac{W_1}{W_2}$

The two relations, $\cos\phi$ and $\sin\phi$ can also be found as,

$$\cos\phi = \frac{W_1 + W_2}{\sqrt{3} \cdot V_L \cdot I_L} = \frac{W_1 + W_2}{3 \cdot V_p \cdot I_p} \qquad \text{and} \qquad \sin\phi = \frac{W_2 - W_1}{V_L \cdot I_L} = \frac{W_2 - W_1}{\sqrt{3} \cdot V_p \cdot I_p}$$

Comments on Two Wattmeter Readings

When the balanced load is only resistive ($\phi = 0°$), i.e. power factor ($\cos\phi = 1.0$), the readings of the two wattmeters ($W_1 = W_2 \propto \cos 30° = 0.866(+ve)$), are <u>equal and positive</u>.

Before taking the case of purely reactive (inductive/capacitive) load, let us take first lagging power factor as ($\cos\phi = 0.5$), i.e. $\phi = +60°$. Under this condition,

$W_1 = 0.0$, as $W_1 \propto \cos\ (30° + 60°) = \cos\ 90° = 0.0$, and

$W_2 \propto \cos(30° - 60°) = \cos 30° = 0.866(+ve)$ is positive.

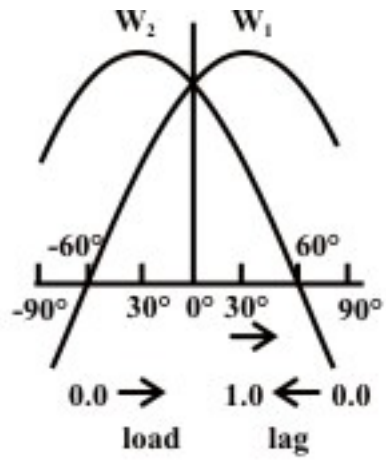

Fig. 20.3 Variation of the readings of two wattmeters (W_1 & W_2) with power factor for a balanced load for the circuit of Fig. 20.1

It may be noted that the magnitudes of the phase or line voltage and also phase current are assumed to be constant, which means that the magnitude of the load impedance (inductive) is constant, but the angle, ϕ varies as stated.

As the lagging power factor decreases from 1.0 to 0.5, with ϕ increasing from $0°$ to $+60°$, the reading of the first wattmeter, W_1 decreases from a certain positive value to zero (0). But the reading of the second wattmeter, W_2 increases from a certain positive value to positive maximum, as the lagging power factor is decreased from 1.0 to $0.866 (= \cos 30°)$, with ϕ increasing from $0°$ to $+30°$. As the lagging power factor decreases from 0.866 to 0.5, with ϕ increasing from $+30°$ to $+60°$, the reading of the second wattmeter, W_2 decreases from positive maximum to a certain positive value. It may be noted that, in all these cases, $W_2 > W_1$, with both the readings being positive.

If the lagging power factor is 0.0 ($\phi = +90°$), the circuit being purely inductive, the readings of the two wattmeters ($W_1 = -W_2 \propto \cos(30° + 90°) = \cos 120° = -0.5$) are equal and opposite, i.e., W_1 is negative and W_2 is positive. The total power consumed is zero, being the sum of the two wattmeter readings, as the circuit is purely inductive. This means that, as the lagging power decreases from 0.5 to 0.0, with ϕ increasing from $+60°$ to $+90°$, the reading of the first wattmeter, W_1 decreases from zero (0) to a certain negative value, while the reading of the second wattmeter, W_2 decreases from a certain positive value to lower positive one. It may be noted that $|W_2| > |W_1|$, which means that the total power consumed, i.e., ($W_1 + W_2$) is positive, with only W_1 being negative. The variation of two wattmeter readings as stated earlier, with change in power factor (or phase angle) is now summarized in Table 20.1. The power factor [pf] ($= \cos\phi$) is taken as lagging, the phase current lagging the phase voltage by the angle, ϕ (taken as positive (+ve)), as shown for balanced star-connected load in Fig. 20.2. The circuit is shown in Fig. 20.1. All these are also valid for balanced delta-connected load.

Sl. No.	Power factor [pf] (Phase angle)	Wattmeter readings (W)		Remarks
		W_1	W_2	
1.	pf = unity [1.0] ($\phi = 0°$)	+ve	+ve	$W_1 = W_2$
2.	$0.5 < \text{pf} < 1.0$ ($60° > \phi > 0°$)	+ve	+ve	$W_1 > W_2$
3.	pf = 0.5 ($\phi = 60°$)	+ve	zero (0.0)	Total power = W_1
4.	$0.0 < \text{pf} < 0.5$ ($90° > \phi > 60°$)	+ve	-ve	$\lvert W_1 \rvert > \lvert W_2 \rvert$ (Total power = +ve)
5.	pf = zero [0.0] ($\phi = 90°$)	+ve	-ve	$\lvert W_1 \rvert = \lvert W_2 \rvert$ (Total power = zero (0.0))

Table 20.1 Variation of two wattmeter readings with change in power factor of the load current

It may be noted that, if the power factor is leading (ϕ = negative (-ve)), the circuit being capacitive, the readings of the two wattmeters change with the readings interchanging, i.e., W_1 taking the value of W_2, and vice versa. All the points as stated earlier, remain valid, with the comments as given earlier. The first one (#1) in Table 20.1 is a special case, neither lagging, nor leading, with pf = 1.0. But in second one (#2), both readings remain +ve, with $W_1 < W_2$. Same is the case in fourth one (#4), where W_1 is –ve and W_2 is +ve, with $\lvert W_1 \rvert < \lvert W_2 \rvert$, total power being positive (+ve). For third case (#3), W_1 = 0.0 and W_2 is +ve, with total power $= W_2$. For last (fifth) case (#5), W_1 is –ve and W_2 is +ve, with $\lvert W_1 \rvert = \lvert W_2 \rvert$, total power being zero (0.0).

Power measurement using <u>one wattmeter only</u> for a balanced load

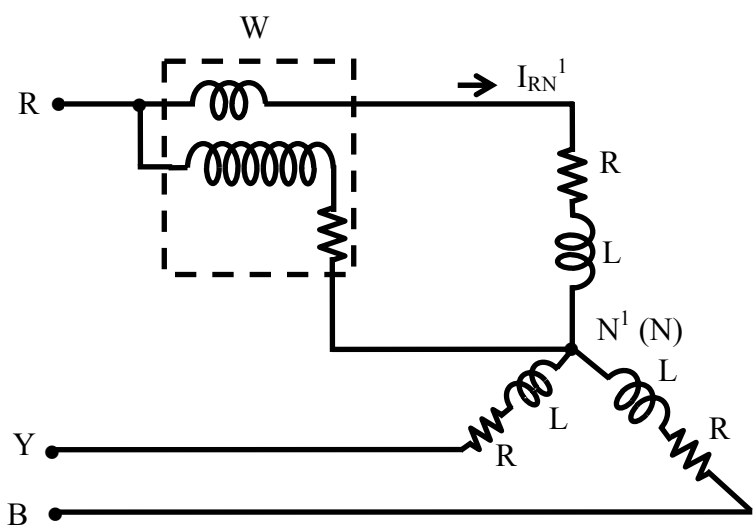

Fig. 20.4 Connection diagram for power measurement using only one wattmeter in a three-phase system with balanced star-connected load

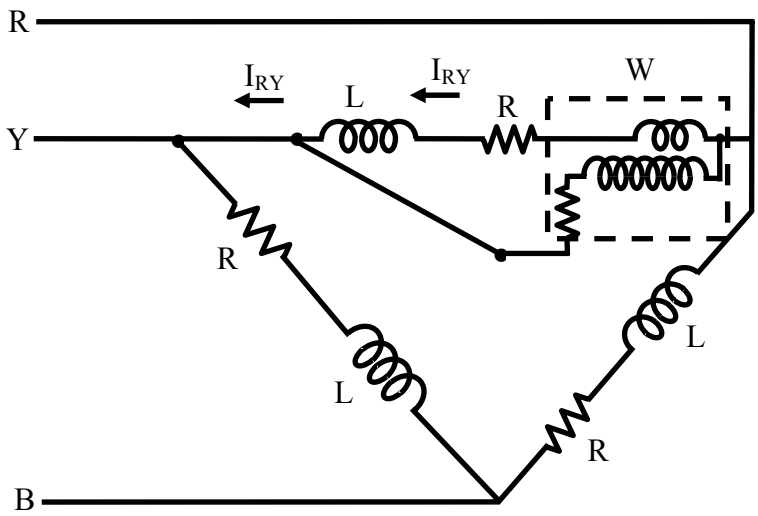

Fig. 20.5 Connection diagram for power measurement using only one wattmeter in a three-phase system with balanced delta-connected load

The circuit diagram for measuring power for a balanced three-phase load is shown in Fig. 20.3. The only assumption made is that, either the neutral point on the load or source side is available. The wattmeter measures the power consumed for one phase only, and the reading is $W = V_p \cdot I_p \cdot \cos\phi$. The total power is three times the above reading, as the circuit is balanced. So, the load must be star-connected and of course balanced one, with the load neutral point being available. The load may also be delta-connected balanced one, if the neutral pinpoint on the source side is available. Otherwise for measuring total power for delta-connected balanced load using one wattmeter only, the connection diagram is given in Fig. 20.4. The wattmeter as stated earlier, measures power for one phase only, with the total power consumed may be obtained by multiplying it by three.

Example 20.1

Calculate the readings of the two wattmeters (W_1 & W_2) connected to measure the total power for a balanced star-connected load shown in Fig. 20.6a, fed from a three-phase, 400 V balanced supply with phase sequence as R-Y-B. The load impedance per phase is $(20 + j15)\,\Omega$. Also find the line and phase currents, power factor, total power, total reactive VA and total VA.

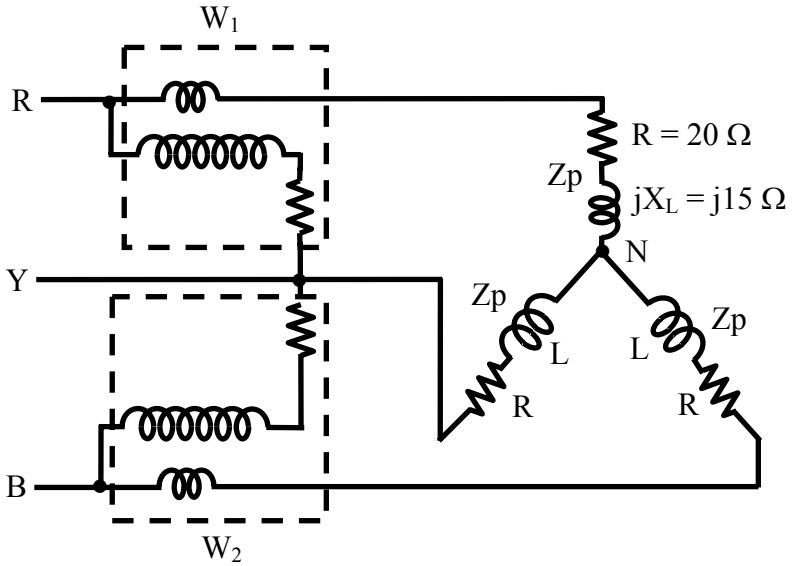

(a)

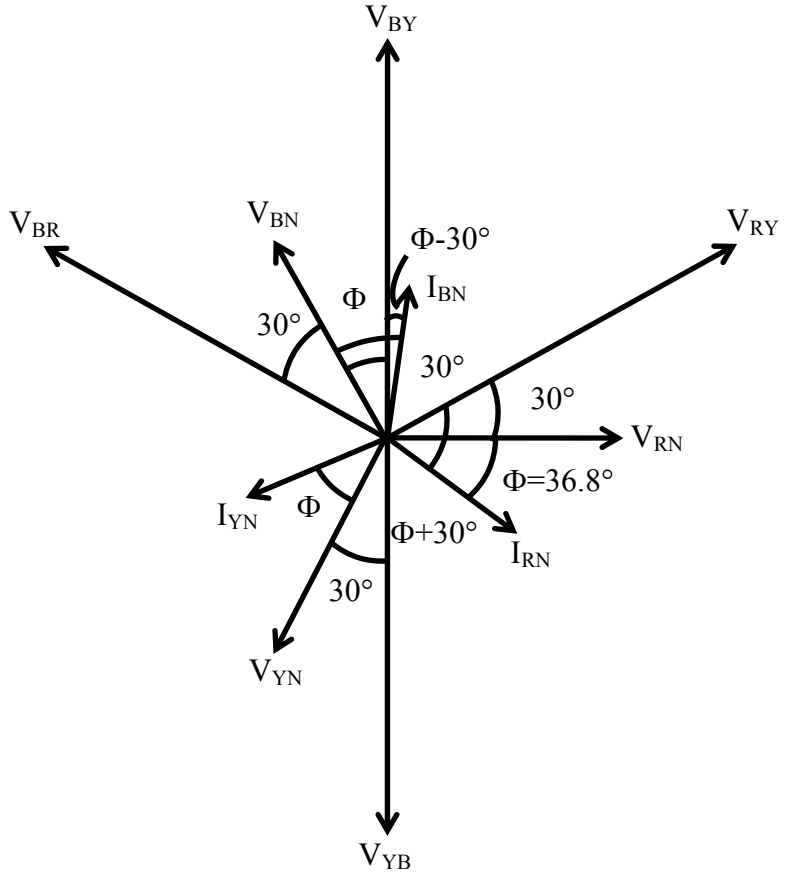

(b)

Fig. 20.6 (a) Circuit diagram for a three-phase system with balanced star-connected load (Example 20.1)
(b) Phasor diagram

Solution

$|V_L| = 400\ V$ $\qquad Z_{RN} = Z_p = 20 + j15 = 25\ \angle +36.87°\ \Omega$

As the star-connected load is balanced, the magnitude of the phase voltage is,

$|V_p| = |V_L| / \sqrt{3} = 400/\sqrt{3} = 231\ V$

Taking the phase voltage, V_{RN} as reference, the phase voltages are,

$V_{RN} = 231\ \angle 0°$; $\quad V_{YN} = 231\ \angle -120°$; $\quad V_{BN} = 231\ \angle +120°$

The phasor diagram is shown in Fig. 20.6b. It has been shown that the line voltage, V_{RY} leads the corresponding phase voltage, V_{RN} by $30°$. So, the line voltages are,

$V_{RY} = 400\ \angle +30°$; $\quad V_{YB} = 400\ \angle -90°$; $\quad V_{BR} = 400\ \angle +150°$

For a star-connected load, the phase and the line currents are same.

The current in R-phase is,

$I_{RN} = I_R = V_{RN} / Z_p = (231.0\ \angle 0°)/(25.0\ \angle +36.87°) = 9.24\ \angle -36.87°\ A$

$= (7.39 - j5.54)\ A$

Two other phase and line currents are,

$I_{YN} = I_Y = 9.24\ \angle -156.87°\ A$; $\quad I_{BN} = I_B = 9.24\ \angle +83.13°\ A$

The power factor of the load is $\cos\phi = \cos 36.87° = 0.8$ lagging, with $\phi = +36.87°$, as the load is inductive.

Total VA $= 3 \cdot V_p \cdot I_p = 3 \times 231.0 \times 9.24 = 6.403$ kVA

This can be taken as $\sqrt{3} \cdot V_L \cdot I_l = \sqrt{3} \times 400 \times 9.24 = 6.403$ kVA

Total power $= 3 \cdot V_p \cdot I_p \cdot \cos\ \phi = 3 \times 231.0 \times 9.24 \times 0.8 = 5.123$ kW

Total reactive VA $= 3 \cdot V_p \cdot I_p \cdot \sin\phi = 3 \times 231.0 \times 9.24 \times \sin 36.87° = 3.842$ kVAR

The readings of the two wattmeters are,

$W_1 = V_{RY} \cdot I_R \cdot \cos(30° + \phi) = 400 \times 9.24 \times \cos 66.87° = 1.45$ kW

The phase angle between V_{RY} and I_R is $66.87°$, obtained using two phasors.

$W_2 = V_{BY} \cdot I_B \cdot \cos(30° - \phi) = 400 \times 9.24 \times \cos 6.87° = 3.67$ kW

The phase angle between V_{BY} and I_B is $6.87°$, obtained using two phasors, where $V_{BY} = 400\ \angle +90°$.

The sum of two readings is $(1.45 + 3.67) = 5.12$ kW, which is same as the total power computed earlier

Example 20.2

Calculate the readings of the wattmeter (W) connected as shown in Fig. 20.7a. The load is the same, as in Fig. 20.7a (Ex. 20.1), i.e., balanced star-connected one, with impedance of $(20 + j15)\ \Omega$ per phase, fed from a three-phase, 400 V, balanced supply, with the phase sequence as R-Y-B.

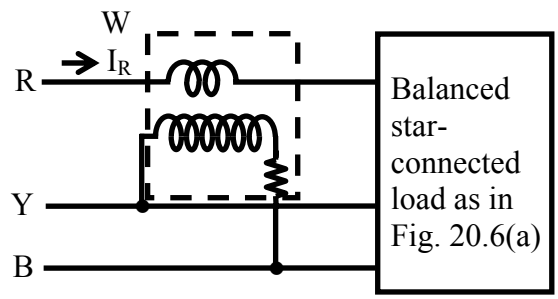

(a)

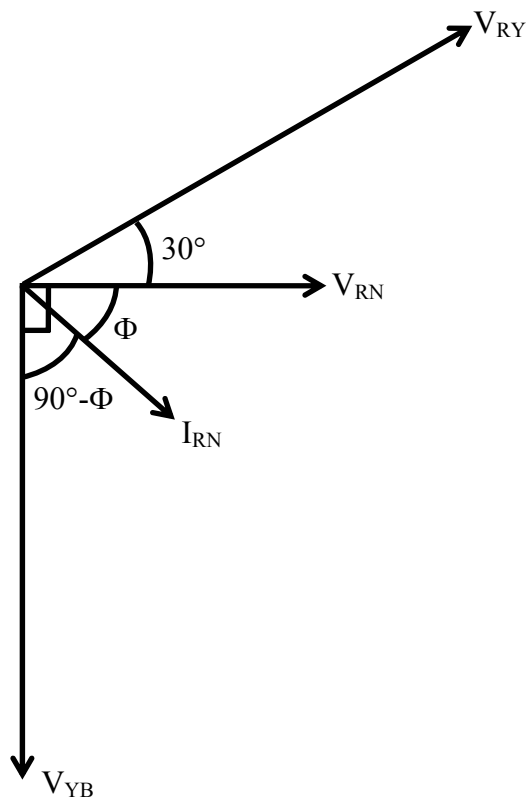

(b)

Fig. 20.7 (a) Circuit diagram (Example 20.2)
(b) Phasor diagram

Solution

The steps are not repeated here, but taken from previous example (20.1).
The phasor diagram is shown in Fig. 20.7b.
The phase voltage, V_{RN} is taken as reference as in Ex. 20.1.
The phase current, I_{RN} is $I_{RN} = 9.24\angle -36.87°\ A$
The phase angle, ϕ of the load impedance is $\phi = +36.87°$
The line voltage, V_{RY} is $V_{RY} = 400\angle +30°\ V$

The line voltage, V_{YB} is $V_{YB} = 400\angle -90°\ \ V$

The reading of the wattmeter (W) is,

$W = V_{YB} \cdot I_{RN} \cdot \cos(V_{YB}, I_{RN}) == V_L \cdot I_p \cdot \cos(90° + \varphi) = -\sqrt{3} \cdot V_p \cdot I_p \cdot \sin\phi$

$= -400 \times 9.24 \times \sin 36.87° = -2.218\ \ kW$

The value is negative, as the load is inductive.

The reading (W) is $1/\sqrt{3} = 0.577$ times the total reactive power as,

$3 \cdot V_p \cdot I_p \cdot \sin\phi = \sqrt{3} \cdot V_L \cdot I_L \cdot \sin\phi$,

or $\sqrt{3}$ times the reactive power per phase.

Example 20.3

Calculate the readings of the two wattmeters (W_1 & W_2) connected to measure the total power for a balanced delta-connected load shown in Fig. 20.8a, fed from a three-phase, 200 V balanced supply with phase sequence as R-Y-B. The load impedance per phase is $(14 - j14)\ \Omega$. Also find the line and phase currents, power factor, total power, total reactive VA and total VA.

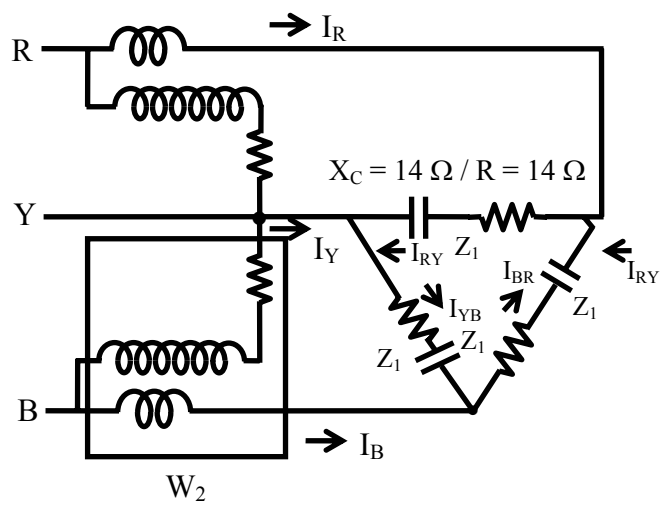

(a)

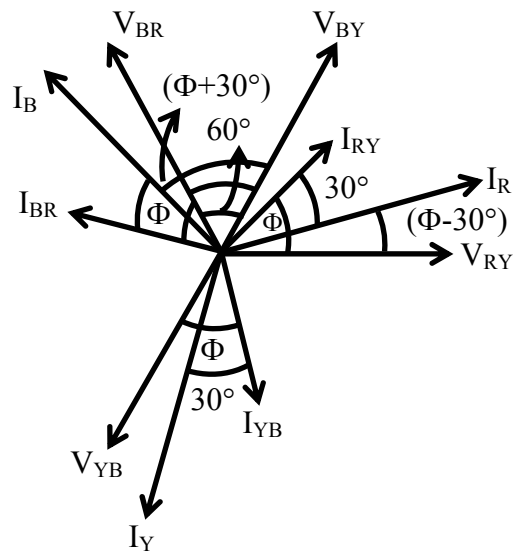

(b)

Fig. 20.8 (a) Circuit diagram for a three-phase system with balanced delta-connected load (Example 20.3)
(b) Phasor diagram

Solution

$Z_{RY} = Z_p = 14 - j14 = 19.8 \angle -45° \ \Omega$

For delta-connected load, $|V_L| = |V_p| = 200 \ V$

Taking the line or phase voltage V_{RY} as reference, the line or phase voltages are,

$V_{RY} = 200 \angle 0°$; $V_{YB} = 200 \angle -120°$; $V_{BR} = 200 \angle +120°$

The phasor diagram is shown in Fig. 20.8b. The phase current, I_{RY} is,

$I_{RY} = V_{RY} / Z_p = (200.0 \angle 0°)/(19.8\angle -45°) = 10.1 \angle +45° = (7.142 + j7.142) \ A$

The other two phase currents are,

$I_{YN} = 10.1 \angle -75° \ A$; $I_{BR} = 10.1 \angle +165° \ A$

The power factor of the load is $\cos\phi = \cos 45° = 0.707$ leading, with $\phi = -45°$, as the load is capacitive.

As the phase currents are balanced, the magnitude of the line current is $\sqrt{3}$ times the magnitude of the phase current, and the value is

$|I_R| = \sqrt{3} \cdot |I_{RY}| = \sqrt{3} \times 10.1 = 17.5 \ A$

It has been shown that the line current, I_R lags the corresponding phase current, I_{RY} by $30°$.

So, the line currents are,

$I_R = I_{RY} - I_{BR} = 10.1 \angle +45° - 10.1 \angle +165° = 17.5 \angle +15° \ A$

$I_Y = I_{YB} - I_{RY} = 17.5 \angle -105° \ A$; $I_B = I_{BR} - I_{YB} = 17.5 \angle +135° \ A$

The procedure is only presented, with the steps given in brief.

Total VA $= 3 \cdot V_p \cdot I_p = 3 \times 200.0 \times 10.1 = 6.06$ kVA

This can be taken as $\sqrt{3} \cdot V_L \cdot I_l = \sqrt{3} \times 200 \times 17.5 = 6.06$ kVA

Total power $= 3 \cdot V_p \cdot I_p \cdot \cos\ \phi = 3 \times 200.0 \times 10.1 \times 0.707 = 4.285$ kW

Total reactive VA $= 3 \cdot V_p \cdot I_p \cdot \sin\ \phi = 3 \times 200.0 \times 10.1 \times \sin\ 45.° = 4.285$ kVAR

The readings of the two wattmeters are,

$W_1 = V_{RY} \cdot I_R \cdot \cos\ (30° + \phi) = 200 \times 17.5 \times \cos(-15°) = 3.38$ kW

The phase angle between V_{RY} and I_R is $15°$, obtained using two phasors.

$W_2 = V_{BY} \cdot I_B \cdot \cos\ (30° - \phi) = 200 \times 17.5 \times \cos 75° = 0.906$ kW

The phase angle between V_{BY} and I_B is $75°$, obtained using two phasors, where $V_{BY} = 200\ \angle +60°$.

The sum of two readings is $(3.38 + 0.906) = 4.286$ kW, which is same as the total power computed earlier

Alternatively, the phase current, I_{RY} can be taken as reference, with the corresponding phase voltage, V_{RY} leading the current by the angle of the load impedance, $\phi = 45°$. So, the phase current and voltage are,

$I_{RY} = 10.1\ \angle 0°\ A$; $\quad V_{RY} = I_{RY}\ \angle 0° \cdot Z_p\ \angle \phi = (10.1 \times 19.8)\ \angle 45° = 200\ \angle 45°\ V$

Two other phase currents and voltages are,

$I_{YB} = 10.1\ \angle -120°$; $\quad I_{BR} = 10.1\ \angle +120°$

$V_{YB} = 200\ \angle -75°$; $\quad V_{BR} = 200\ \angle +165°$

The line current, I_R is,

$I_R = I_{RY} - I_{BR} = 10.1\ \angle 0° - 10.1\ \angle +120° = 17.5\ \angle +30°\ A$

Two other line currents are,

$I_Y = 17.5\ \angle -90°$; $\quad I_B = 17.5\ \angle +150°$

The other steps are not shown here. The readers are requested to study the previous lesson (No. 19) in this module.

The measurement of power using two wattmeters for load (unbalanced or balanced), fed from a balanced three-phase supply, is discussed in this lesson. Also presented are the readings of the two wattmeters for balanced load, along with the determination of the load power factor from the two readings, and some comments on the way, the two readings vary with change in power factor of the load, with the magnitude of the load impedance remaining constant. Some examples are also described here. This is the last lesson in this module (No.5). In the next module (No.6) consisting of two lessons (no. 21-22) only, the discussion on magnetic circuits will be taken up.

20.1 Calculate the reading of the two wattmeter's (W_1, and W_2) connected to measure the power for a balanced three-phase load as given in the following. The supply voltage is 200V and the phase.

i. The connections of the wattmeter, W_1 – current coil is in phase R, and the voltage coil is across R and Y

ii. The connections of the wattmeter, W_2 – current coil is in phase B, and the voltage coil is across B and Y

Draw the phasor diagram

a. star- connected balanced load with (9-j5) Ω per phase

b. delta-connected balanced load with (14+j14) Ω per phase.

20.2 The two wattmeter reading for a balanced three-phase load, are 300W and 100W respectively with the watt meter as given in Prob 20.1. Calculate the total power, the line current, the power factor, and also the reactive VA.

20.3 A balanced delta-connected load with 50Ω per phase (Fig. 20.9), is fed from a three-phase 200V supply. Find the reading of the wattmeter.

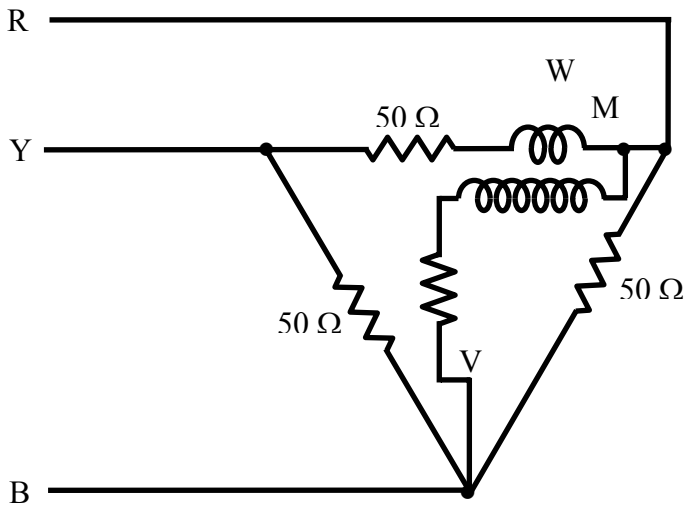

Fig. 20.9

List of Figures

Fig. 20.1 Connection diagram for two-wattmeter method of power measurement in a three-phase balanced system with star-connected load

Fig. 20.2 Phasor diagram for two-wattmeter method of power measurement in a three-phase system with balanced star-connected load

Fig. 20.3 Variation of the readings of two wattmeters (W_1 & W_2) with power factor for a balanced load for the circuit of Fig. 20.1

Fig. 20.4 Connection diagram for power measurement using only one wattmeter in a three-phase system with balanced star-connected load

Fig. 20.5 Connection diagram for power measurement using only one wattmeter in a three-phase system with balanced delta-connected load

Fig. 20.6 (a) Circuit diagram for a three-phase system with balanced star-connected load (Example 20.1)

(b) Phasor diagram

Fig. 20.7 (a) Circuit diagram (Example 20.2)

(b) Phasor diagram

Fig. 20.8 (a) Circuit diagram for a three-phase system with balanced delta-connected load (Example 20.3)

(b) Phasor diagram

Module 6

Magnetic circuits and Core losses

Lesson 21

Magnetic Circuits

Contents

21 Magnetic Circuit (Lesson: 21) 4

21.1 Goals of the lesson ……. 4

21.2 Introduction 5

21.3 Different laws for calculating magnetic field…….. 5

21.3.1 Biot-Savart law ……... 5

21.3.2 Ampere's circuital law…… 6

21.3.3 Application of Ampere's circuital law in magnetic circuit …… 7

21.3.4 Reluctance & permeance …… 9

21.4 B-H Characteristics 9

21.4.1 Different zones of B-H characteristic …… 10

21.5 Analysis of Series magnetic circuit …… 12

21.6 Analysis of Series-parallel magnetic circuit ……... 13

21.6.1 Important equations …… 15

21.7 General discussion on solving problems …… 15

21.7.1 Worked out example …….. 16

21.8 Answer the following: …… 19

21.9 Tick the correct choice……..……...……... 20

21.1 Goals of the lesson

In this lesson, we shall acquaint the reader, primarily with the basic concepts of magnetic circuit and methods of solving it. Biot-Savart law for calculating magnetic field due to a known current distribution although fundamental and general in nature, requires an integration to be evaluated which sometimes become an uphill task. Fortunately, due to the specific nature of the problem, *Ampere's circuital law* (much easier to apply) is adopted for calculating field in the core of a magnetic circuit. You will also understand the importance of B-H curve of a magnetic material and its use. The concept and analysis of *linear* and *non linear* magnetic circuit will be explained. The lesson will conclude with some worked out examples.

Key Words: mmf, flux, flux density, mean length, permeability, reluctance.

After going through this section students will be able to answer the following questions.

1. What is a *magnetic circuit*?
2. What are *linear* and *non linear* magnetic circuits?
3. What information about the core is necessary for solving linear magnetic circuit?
4. What information about the core is necessary for solving non linear magnetic circuit?
5. How to identify *better* magnetic material from the B-H characteristics of several materials?
6. What should be done in order to reverse the direction of the field within the core?
7. What assumption is made to assume that the flux density remains constant throughout the section of the core?
8. What is the expression for energy stored in the air gap of a magnetic circuit?
9. Enumerate applications of magnetic circuit.
10. Is the core of a magnetic material to be laminated when the exciting current is d.c?

They will also be able to do the following:

1. How to translate a given magnetic circuit into its electrical equivalent circuit.
2. How to draw B-H curve of a given material from the data supplied and how to use it for solving problem.
3. How to solve various kinds of problems involving magnetic circuits.

21.2 Introduction

Before really starting, let us look at some magnetic circuits shown in the following figures.

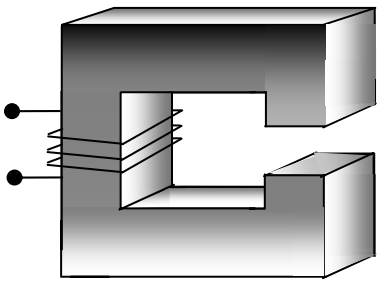

Figure 21.1:

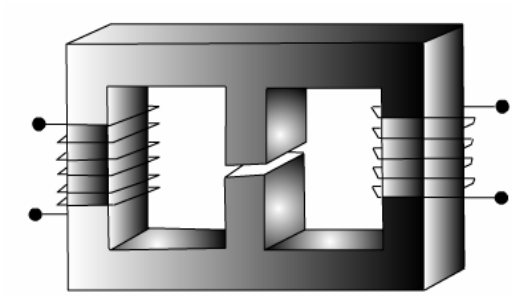

Figure 21.2:

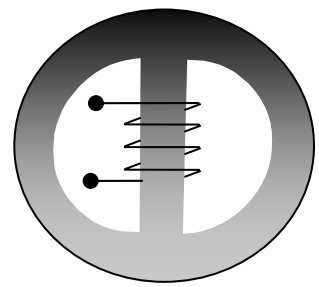

Figure 21.3:

All of them have a magnetic material of regular geometric shape called *core*. A coil having a number of turns (= N) of conducting material (say copper) are wound over the core. This coil is called the *exciting coil*. When no current flows through the coil, we don't expect any magnetic field or lines of forces to be present inside the core. However in presence of current in the coil, magnetic flux ϕ will be produced within the core. The strength of the flux, it will be shown, depends on the product of number of turns (N) of the coil and the current (i) it carries. The quantity Ni called mmf (magnetomotive force) can be thought as the cause in order to produce an effect in the form of flux ϕ within the core. Is it not somewhat similar to an electrical circuit problem where a voltage (emf) is applied (cause) and a current is produced (effect) in the circuit? Hence the term *magnetic circuit* is used in relation to producing flux in the core by applying mmf (= Ni). We shall see more similarities between an *electrical circuit* and a *magnetic circuit* in due course as we go along further. At this point you may just note that a magnetic circuit may be as simple as shown in figure 21.1 with a single core and a single coil or as complex as having different core materials, *air gap* and multiple exciting coils as in figure 21.2. After going through this lesson you will be able to do the following.

1. to distinguish between a *linear* and *non linear* magnetic circuit.
2. to draw the equivalent electrical circuit for a given magnetic circuit problem.
3. to calculate *mean lengths* of various flux paths.
4. to calculate the *reluctances* of the various flux paths for *linear* magnetic circuit problem.
5. to understand the importance of B-H characteristics of different materials.
6. how to deal with a *non linear* magnetic circuit problem using B-H characteristic of the materials.

21.3 Different laws for calculating magnetic field

21.3.1 Biot-Savart law

We know that any current carrying conductor produces a magnetic field. A magnetic field $\Re$ is characterized either by $\vec{H}$, the magnetic *field intensity* or by $\vec{B}$, the magnetic *flux density* vector.

These two vectors are connected by a rather simple relation: $\vec{B} = \mu_0 \mu_r \vec{H}$; where $\mu_0 = 4\pi \times 10^{-7}$ H/m is called the *absolute permeability* of free space and μ_r, a dimensionless quantity called the *relative permeability* of a medium (or a material). For example the value of μ_r is 1 for free space or could be several thousands in case of ferromagnetic materials.

Biot-Savart law is of fundamental in nature and tells us how to calculate dB or $\vec{dH}$ at a given point with position vector r, due to an elemental current $i\vec{dl}$ and is given by:

$$\vec{dB} = \frac{\mu_0 \mu_r}{4\pi} \frac{i\vec{dl} \times \vec{r}}{r^3}$$

If the shape and dimensions of the conductor carrying current is known then field at given point can be calculated by integrating the RHS of the above equation.

$$\vec{B} = \frac{\mu_0 \mu_r}{4\pi} \int_{\text{length}} \frac{i\vec{dl} \times \vec{r}}{r^3}$$

where, length indicates that the integration is to be carried out over the length of the conductor. However, it is often not easy to evaluate the integral for calculating field at any point due to any arbitrary shaped conductor. One gets a nice closed form solution for few cases such as:

1. Straight conductor carries current and to calculate field at a distance d from the conductor.
2. Circular coil carries current and to calculate field at a point situated on the axis of the coil.

21.3.2 Ampere's circuital law

This law states that line integral of the vector $\vec{H}$ along any arbitrary closed path is equal to the current enclosed by the path. Mathematically:

$$\oint \vec{H} \cdot \vec{dl} = I$$

For certain problems particularly in *magnetic circuit problems* Ampere's circuital law is used to calculate field instead of the more fundamental *Biot Savart law* for reasons going to be explained below. Consider an infinite straight conductor carrying current i and we want to calculate field at a point situated at a distance d from the conductor. Now take the closed path to be a circle of radius d. At any point on the circle the magnitude of field strength will be constant and direction of the field will be tangential. Thus LHS of the above equation simply becomes $H \times 2\pi d$. So field strength is

$$H = \frac{I}{2\pi d} \text{ A/m}$$

It should be noted that in arriving at the final result no integration is required and it is obtained rather quickly. However, one has to choose a suitable path looking at the distribution of the current and arguing that the magnitude of the field remains constant through out the path before applying this law with advantage.

21.3.3 Application of Ampere's circuital law in magnetic circuit

Ampere's circuital law is quite handy in determining field strength within a core of a magnetic material. Due to application of mmf, the *tiny dipole* magnets of the core are aligned one after the other in a somewhat disciplined manner. The contour of the lines of force resembles the shape the material. The situation is somewhat similar to flow of water through an arbitrary shaped pipe. Flow path is constrained to be the shape of the bent pipe. For an example, look at the sectional view (figure 21.4 & 21.5) of a toroidal magnetic circuit with N number of turns wound uniformly as shown below. When the coil carries a current i, magnetic lines of forces will be created and they will be confined within the core as the permeability of the core is many (order of thousands) times more than air.

Take the chosen path to be a circle of radius r. Note that the value of H will remain same at any point on this path and directions will be always tangential to the path. Hence by applying *Ampere's circuital law* to the path we get the value of H to be $\frac{NI}{2\pi r}$. If r is increased from a to be b the value of H decreases with r. a and b are respectively the inner and outer radius of the toroidal core.

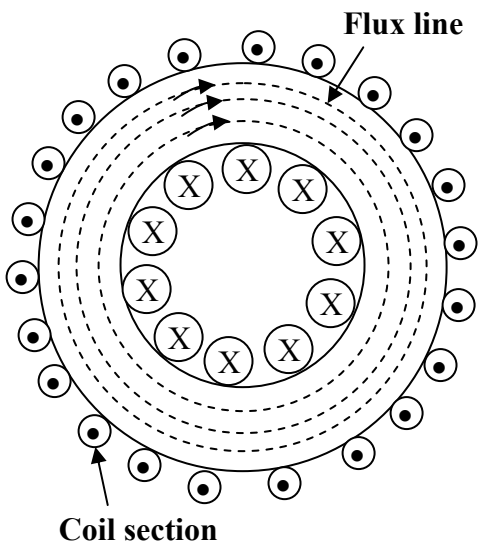

Figure 21.4:

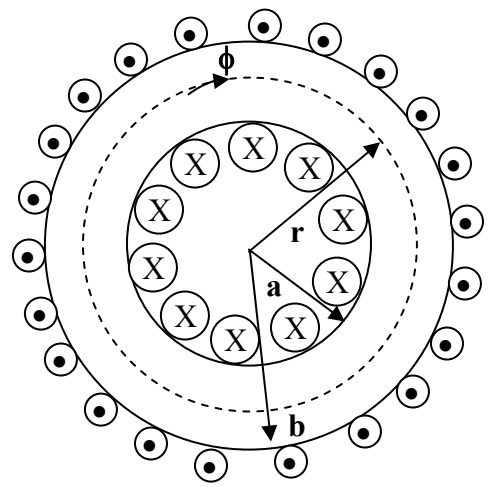

Figure 21.5:

Assumptions

1. **Leakage flux & Fringing effect**
   Strictly speaking all the flux produced by the mmf will not be confined to the core. There will be some flux lines which will complete their paths largely through the air as depicted in figure 21.6. Since the reluctance (discussed in the following section) or air is much higher compared to the reluctance offered by the core, the leakage flux produced is rather small. In our discussion here, we shall neglect leakage flux and assume all the flux produced will be confined to the core only.

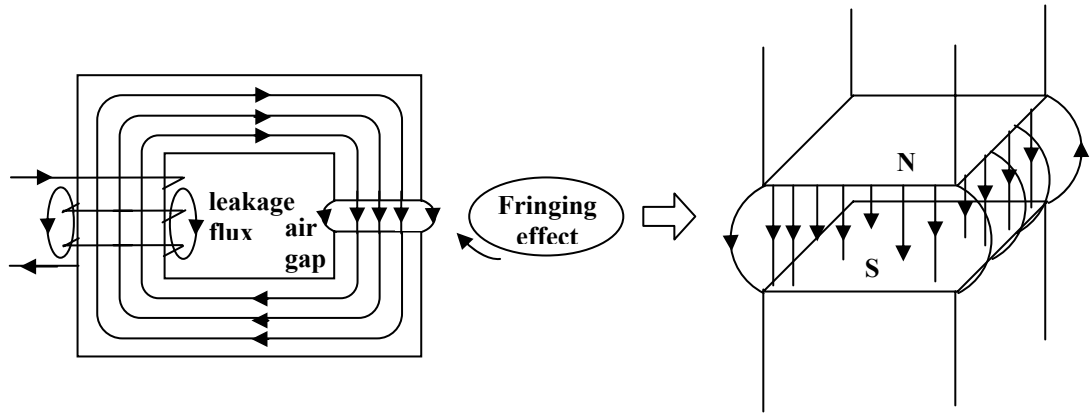

Figure 21.6:

In the magnetic circuit of figure 21.6 an air gap is present. For an exciting current, the flux lines produced are shown. These flux lines cross the air gap from the top surface of the core to the bottom surface of the core. So the upper surface behaves like a north pole and the bottom surface like a south pole. Thus all the flux lines will not be vertical and confined to the core face area alone. Some lines of force in fact will reach the bottom surface via bulged out curved paths outside the face area of the core. These flux which follow these curved paths are called fringing flux and the phenomenon is called fringing effect. Obviously the effect of fringing will be smaller if the air gap is quite small. Effect of fringing will be appreciable if the air gap length is more. In short the effect of fringing is to make flux density in the air gap a bit less than in the core as in the air same amount of flux is spread over an area which is greater than the core sectional area. Unless otherwise specified, we shall neglect the fringing effect in our following discussion. Effect of fringing sometimes taken into account by considering the effective area in air to be about 10 to 12% higher than the core area.

2. In the practical magnetic circuit (as in figure 21.5), the thickness (over which the lines of forces are spread = b-a) are much smaller compared to the overall dimensions (a or b) of the core. Under this condition we shall not make great mistake if we calculate H at $r_m = \frac{(b-a)}{2}$ and take this to be H every where within the core. The length of the flux path corresponding to the mean radius i.e., $l_m = 2\pi r_m$ is called the mean length. This assumption allows us to calculate the total flux ϕ produced within the core rather easily as enumerated below:

- Calculate the mean length l_m of the flux path from the given geometry of the magnetic circuit.
- Apply Ampere's circuital law to calculate $H = \dfrac{NI}{l_m}$
- Note, this H may be assumed to be same every where in the core.
- Calculate the magnitude of the flux density B from the relation $B = \mu_o \mu_r H$.
- Total flux within the core is $\phi = BA$, where A is the cross sectional area of the core.

21.3.4 Reluctance & permeance

Let us now try to derive a relationship between flux produced ϕ and mmf Ni applied for linear case.

$$\begin{aligned}
\phi &= BA \\
&= \mu_o \mu_r HA \qquad \because \text{ linear relationship between } B \text{ and } H. \\
&= \mu_o \mu_r \left(\frac{Ni}{l}\right) A \quad \text{putting the expression for } H. \\
&= \frac{Ni}{\frac{1}{\mu_o \mu_r}\frac{l}{A}} \quad \text{arranging the terms.}
\end{aligned}$$

Now defining Ni = mmf and $\Re = \frac{1}{\mu_0 \mu_r}\frac{l}{A}$, the above equation can be written in the following *handy form*

$$\phi = \frac{Ni}{\Re} = \frac{Ni}{\frac{1}{\mu_0 \mu_r}\frac{l}{A}} = \frac{mmf}{Reluctance}$$

This equation resembles the familiar current voltage relationship of an electric circuit which is produced below for immediate comparison between the two:

$$i = \frac{v}{R} = \frac{V}{\frac{\rho l}{a}} = \frac{Voltage}{Resistance}$$

The expression in the denominator is called resistance which impedes the flow of the current. $\Re = \frac{1}{\mu_0 \mu_r}\frac{l}{A}$ is known as reluctance of the magnetic circuit and *permeance* (similar to admittance in electric circuit) is defined as the reciprocal of reluctance i.e., $\rho = \frac{1}{\Re}$.

21.4 B-H Characteristics

A magnetic material is identified and characterized by its $B - H$ characteristic. In free space or in air the relationship between the two is *linear* and the constant of proportionality is the permeability μ_0. If B is plotted against H, it will be straight a line. However, for most of the materials the relationship is not linear and is as shown in figure 21.7. A brief outline for experimental determination of B-H characteristic of a given material is given now. First of all a sample magnetic circuit (with the given material) is fabricated with known dimensions and number of turns. Make a circuit arrangement such as shown in Figure 21.8, to increase the current from 0 to some safe maximum value. Apart from ammeter reading one should record the amount of flux produced in the core by using a *flux meter*-let us not bother how this meter works!

Let,

Number of turns	=	N
Mean length of the flux path	=	l in m.
Cross sectional area	=	a in m^2
Reading of the ammeter	=	I in A
Reading of the flux meter	=	ϕ in Wb

Now corresponding to this current, calculate $H = \frac{NI}{l}$ and $B = \frac{\phi}{a}$ and tabulate them. Thus we have several pair of H & B values for different values of currents. Now by choosing H to be the x axis B to be the y axis and plotting the above values one gets a *typical* B-H curve as shown in Figure 21.7 below.

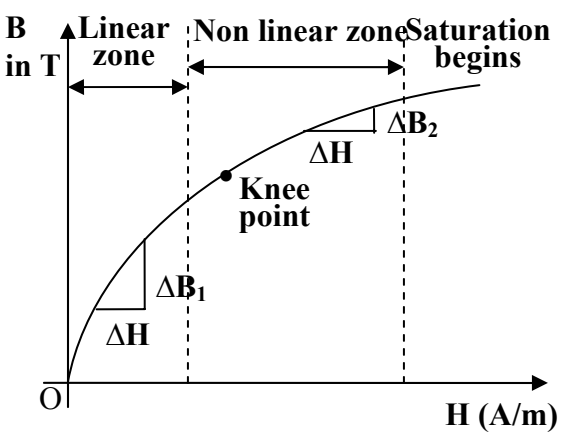

Figure 21.7: A typical B-H curve

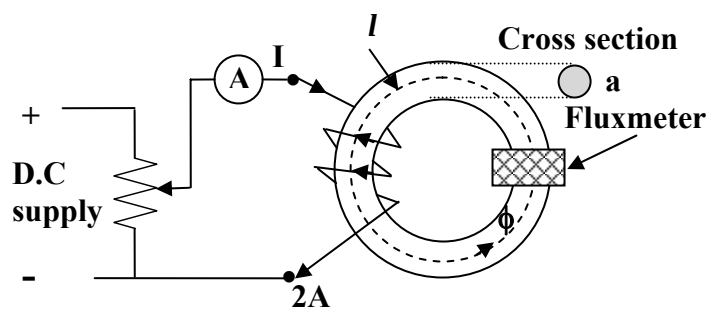

Figure 21.8: Experimental determination of B-H curve

21.4.1 Different zones of B-H characteristic

The initial portion of the B-H curve is nearly a straight line and called *linear zone*. After this zone the curve gradually starts deviating from a straight line and enters into the nonlinear zone. The slope of the curve $\frac{dB}{dH}$ starts gradually decreasing after the linear zone. A time comes when there is practically no increase in B in spite of the fact that H is further increased. The material is then said to be *saturated*. The rise in the value of B in the linear zone is much more than in the nonlinear or saturation zone for *same* ΔH. this can be ascertained from the B-H curve by noting $\Delta B_1 > \Delta B_2$ for same ΔH.

For this lesson, a brief qualitative explanation for the typical nature of the B-H curve is given. In a ferromagnetic material, very large number of tiny magnets (*magnetic dipoles*) are present at the atomic/molecular level. The material however does not show any net magnetic property at macroscopic level due to random distribution of the dipoles and eventual cancellation of their effects. In presence of an external field $\vec{H}$, these dipoles start aligning themselves along the direction of the applied field. Thus the more and more dipoles get aligned (resulting into more B) as the H i.e., current in the exciting coil is increased. At the initial phase, increase in B

is practically proportional to H. However rate of this alignment gets reduced after a definite value of H as number of randomly distributed dipoles decreases. This is reflected in the nonlinear zone of the figure 21.7. Obviously if we further increase H, a time will come when almost all the dipoles will get aligned. Under such circumstances we should not expect any rise in B even if H is increased and the core is said to be *saturated*. At the saturation zone, the characteristic becomes almost parallel to the H axis.

Different materials will have different B-H curves and if the characteristics are plotted on same graph paper, one can readily decides which of them is better than the other. Referring to Figure 21.9, one can easily conclude that material-3 is better over the other two as flux produced in material-3 is the highest for same applied field H.

From the above discussion it can be said that there is no point in operating a magnetic circuit deep into saturation zone as because large exciting current will put extra overhead on the source supplying power to the coil. Also any desire to increase B by even a small amount in this zone will call for large increase in the value of the current. In case of transformers and rotating machines operating point is chosen close to the *knee point* of the B-H characteristic in order to use the magnetic material to its true potential. To design a constant value of *inductance*, the operating point should be chosen in the linear zone.

Approach to solve a magnetic circuit problem will be different for *linear* and *nonlinear* cases. In the following section let us discuss those approaches followed by equivalent electrical circuit representation of the magnetic circuits. It is instructive to draw *always* the equivalent representation of a magnetic circuit for the following reasons:

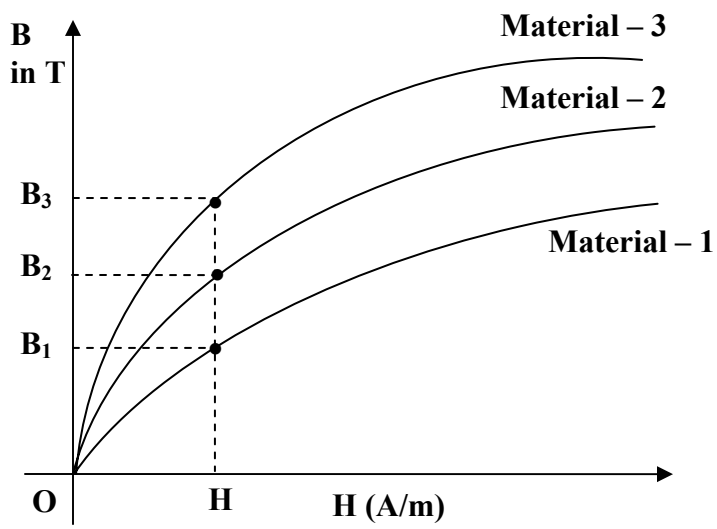

Figure 21.9:

1. It will help us to visualize the problem in terms of more familiar *series* and *series-parallel* d.c circuits.
2. We can apply with ease KFL (Kirchoff's flux law) at the junctions in the same manner as we apply KCL in circuit analysis.
3. Similar to KVL equations, we can apply *mmf* balance equations in different closed paths of the magnetic circuit.
4. Above all, with this circuit before hand, one can decide upon the strategy of solving the problem.

21.5 Analysis of Series magnetic circuit

Consider first a simple magnetic circuit, shown in Figure 21.10 with a single core material having uniform cross sectional area A and mean length of flux path *l*. Reluctance offered to the flow of flux is $\Re$. The corresponding electrical representation is rather simple. Due to the fact that $NI = \phi\Re = Hl,$ the equivalent electrical circuit is also drawn beside the magnetic circuit. Polarity of mmf is decided on the basis of the direction of the flux which is clockwise inside the core in this case. Although in the actual magnetic circuit there is no physical connection of the winding and the core, in the electrical circuit representation mmf and reluctance are shown to be connected. One should not feel disturbed by this as because the relationship between mmf and flux prompted us to draw an electrical equivalent to facilitate easier calculation and neat visualization of the actual problem.

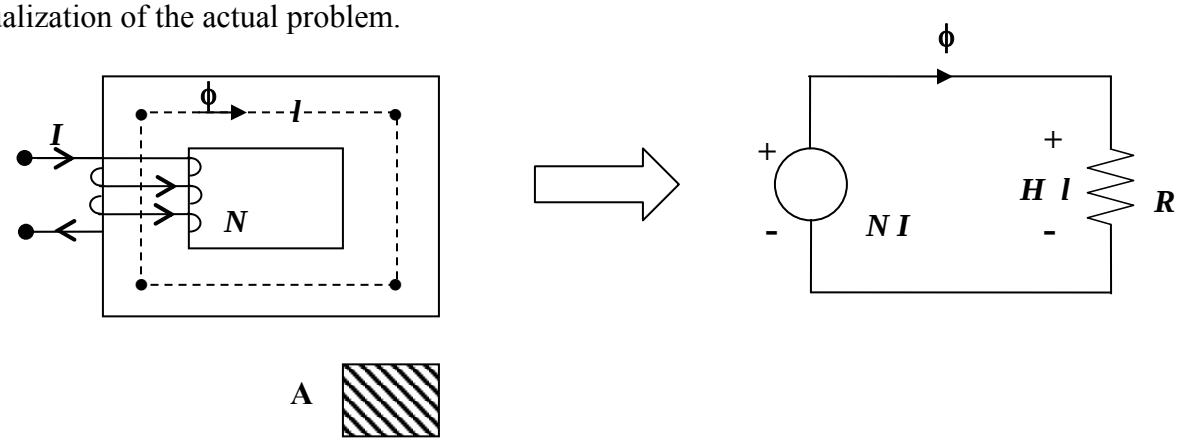

Figure 21.10:

Let us now consider another magnetic circuit which is similar to the earlier one but has a small *air gap* of length l_g as shown in Figure 21.11 and note that it is a series circuit involving two mediums, namely (i) iron and (ii) air. It is a series circuit because same flux (ϕ) has to flow through the mediums. Hence total reluctance will be the sum of reluctances of iron and air $\left(\Re = \Re_i + \Re_{\text{air}}\right)$.

For this circuit basic equations can be developed as follows:
Let,

$$\begin{aligned}
\text{Number of turns} &= N \\
\text{Exciting current i} &= I \text{ in A} \\
\text{Mean length of the flux path through iron} &= l_i \text{ in m} \\
\text{Length of the flux path through air} &= l_g \text{ in m} \\
\text{Cross sectional area} &= A \text{ in m}^2
\end{aligned} \tag{21.2}$$

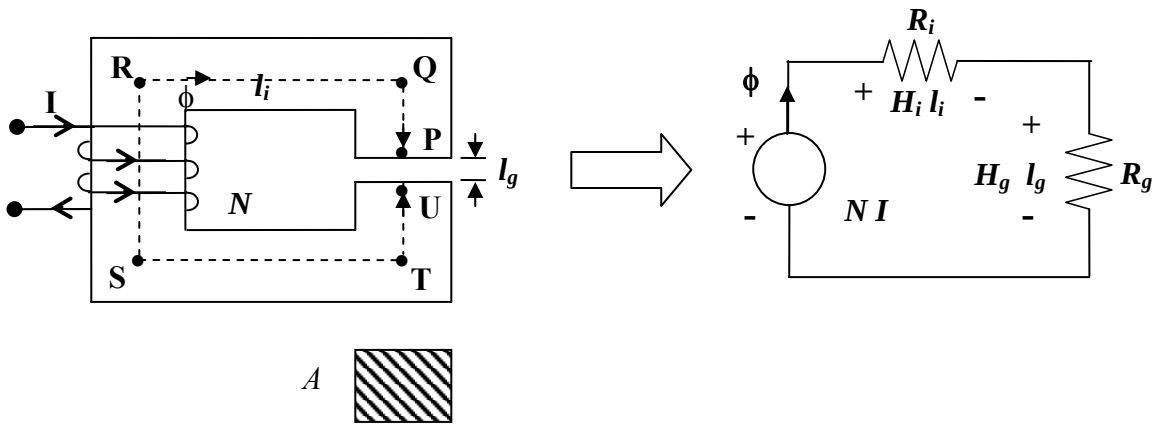

Figure 21.11

If the cross sectional area A is constant throughout, flux density $B = \frac{\phi}{A}$ will be also constant both in iron and air path. Since value of permeabilities are different for iron and air, the corresponding values of H too will be different.

H required for iron, $H_i = \frac{B}{\mu_0 \mu_i}$

H required for air, $H_g = \frac{B}{\mu_0}$

$\because$ Ampere circuital law gives

$$\begin{aligned} NI &= H_i l_i + H_g l_g \\ &= \frac{B}{\mu_0 \mu_i} l_i + \frac{B}{\mu_0} l_g \\ &= \frac{\frac{\phi}{A}}{\mu_0 \mu_i} l_i + \frac{\frac{\phi}{A}}{\mu_0} l_g \\ &= \phi \frac{1}{\mu_0 \mu_i} \frac{l_i}{A} + \phi \frac{1}{\mu_0} \frac{l_g}{A} \\ NI &= \phi \Re_i + \phi \Re_g \\ NI &= \phi \left(\Re_i + \Re_g \right) \\ \text{or}, \phi &= \frac{NI}{\left(\Re_i + \Re_g \right)} \end{aligned}$$

So as expected these two reluctances are connected in series. In fact, for series magnetic circuit having different reluctance segments, total reluctance will be the sum of individual reluctances.

21.6 Analysis of series-parallel magnetic circuit.

We now take up the following magnetic circuit (Figure 21.12) which appears to be not so straight forward as the previous cases. As a first step to solve this circuit, we would like to draw its equivalent electrical representation. Vertical links of the core are called *limbs* and the horizontal links are called *yoke* of the magnetic circuit. In the figure PU, QT and RS are the

limbs whereas PQ, QR, UT and TS are the yokes. It is customary to fix up the corner points P,Q,R etc from the given physical dimensions, joining of which will give you the *mean length* of the flux paths.

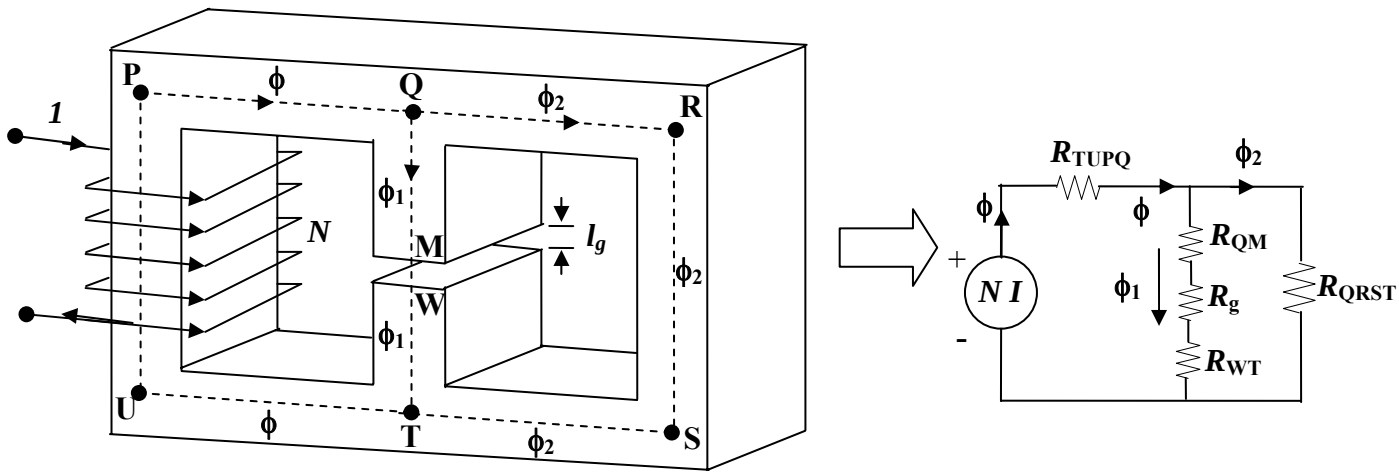

Figure 21.12:

If the coil carries a current I in the direction shown, flux ϕ, produced in the first limb will be in the upward direction. Same ϕ is constrained to move along the yoke PQ. At point Q, two parallel paths are available to ϕ for its onwards journey namely (i) the central limb QT and (ii) the yoke QR. In other words, ϕ will be divided into two components ϕ_1 and ϕ_2 as shown with the obvious condition $\phi = \phi_1 + \phi_2$. The relative values of these components will be decided by respective reluctances of the paths. ϕ_1 and ϕ_2 once again recombine at point T and completes the path. Now in the path TUPQ flux ϕ is same, it is made of same material and has same cross sectional area A, then its reluctance $\Re_{TU\ PQ} \propto \frac{l_{TU\ PQ}}{A}$. In the central limb, flux is same (ϕ_1), however it encounters two materials, one is iron (QM and WT) and the other is a small air gap (MW). The reluctance of the air gap $\Re_g = \frac{l_g}{\mu_0 A}$. The two reluctances $\Re_{QM}$ and $\Re_{WT}$ of the magnetic material may however be combined into a single reluctance as $\Re_1 = \Re_{QM} + \Re_{WT}$. The portion of the magnetic circuit which carries flux ϕ_2 can be represented by a single reluctance $\Re_{QRST} \propto \frac{l_{QRST}}{A}$. Instead of carrying on with long suffixes let us call $\Re_{QRST}$ to be $\Re_2$. To write down the basic equations let us redraw the electrical equivalence of the above magnetic circuit below (Figure 21.13):

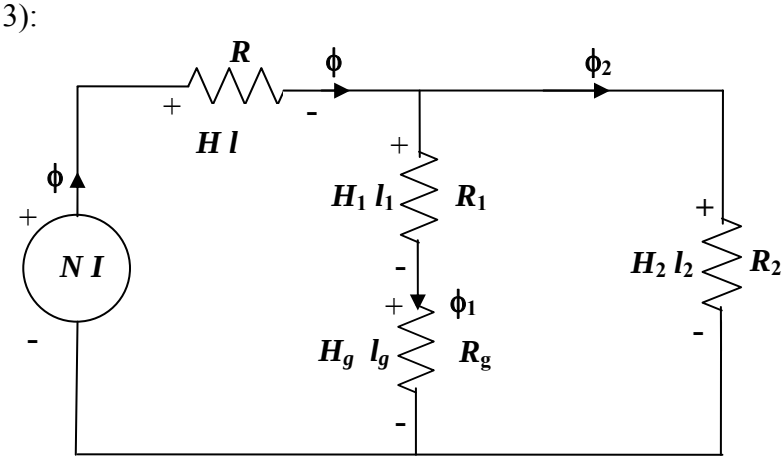

Figure 21.13:

21.6.1 Important equations

The various equations which will hold good are written below:

$$\phi = \phi_1 + \phi_2$$

$$NI = Hl + H_1 l_1 + H_g l_g = \Re\phi + (\Re_1 + \Re_g)\phi_1 \text{ balance in loop1}$$

$$(\Re_1 + \Re_g)\phi_1 = \Re_2\phi_2 \text{ mmf balance in loop2}$$

$$H_1 l_1 + H_g l_g = H_2 l_2 \text{ mmf balance in loop2}$$

$$NI = Hl + H_2 l_2 \text{ mmf balance in the outer loop.}$$

21.7 General discussion on solving problems

As pointed out earlier, the approach to solve a magnetic circuit problem is primarily guided by the fact that whether the magnetic circuit is *linear* or *non linear*. If it is linear then the material is fully characterized by its relative permeability μ_r and the reluctance which remains constant (independent of the operating point) can be easily calculated and shown in the equivalent circuit. In other words, for linear cases, the magnetic circuit problems are solved exactly in the same manner for solving linear electrical circuits. Depending on situation, one can invoke any convenient method of solving electrical circuit problem here as well.

Let us go through the following solved linear magnetic circuit numerical problem to understand the steps involved.

However, in case of non linearity (which is more common in practice), one has no other alternative but to refer to *graphical solution* involving B-H characteristic of the material or materials. The reason being, the material can not be characterized by a unique μ_r for different operating points as $\frac{dB}{dH}$ is a function of the operating point. The values of B's (B, B_1, B_2) in the three limbs are expected to be different in the magnetic circuit of Figure 21.12. Instead of looking for relative permeabilities, it will be much easier to read the corresponding H values (H, H_1, H_2) from the B-H curve of the material and calculate the respective mmf drops as Hl, Hl_1 and Hl_2. Generally the pair of B-H values are given in tabular form for some fixed number of points. One has to plot these points on a simple graph paper and join them by a smooth curve to get the characteristic and use it for problem solving.

In practical situations we would like to know how much mmf (NI) is needed in order to establish a definite amount of flux at a particular portion of the magnetic circuit. In this lesson, we have primarily discussed the methods to be adopted to solve such problems. However, the reverse problem i.e., if the mmf (NI) is known how to calculate the flux produced at a particular portion of the magnetic circuit is somewhat involved. Similar situation exists in non linear electric circuit analysis as well with supply voltage known and the circuit elements are non linear in nature. In such cases, one has to either adopt *numerical* techniques or solve the problem graphically by drawing appropriate load lines. In this introductory lesson of magnetic circuit, we shall confine ourselves in solving problem of the first kind.

Let us go through the following solved non *linear magnetic circuit* numerical problem to understand the steps involved.

21.7.1 Worked out example

- **Example-1** In the magnetic circuit detailed in Figure 21.14 with all dimensions in mm, calculate the required current to be passed in the coil having 200 turns in order to establish a flux of 1.28 mWb in the *air gap*. Neglect fringing effect and leakage flux. The B-H curve of the material is given in Figure 21.15. Permeability of air may be taken as, $\mu_0 = 4\pi \times 10^{-7}$ H/m

Solution:

Step 1 First draw the simplified diagram of the given magnetic circuit along with the equivalent circuit as shown in figure 21.16.

Step 2 To calculate *mean lengths* of various parts, mark the center points of various limbs and yokes with small bullets.

Step 3 Name the different portions which will carry same flux as 1, 2 and 3. For example, the path CFED is in fact path 1 where flux ϕ_1 will remain same. Similarly the path DC (path 2) will carry same flux ϕ_2 and path CBAD (path 3) will carry same flux ϕ_3.

Step 4 Calculation of mmf required for the path 2:

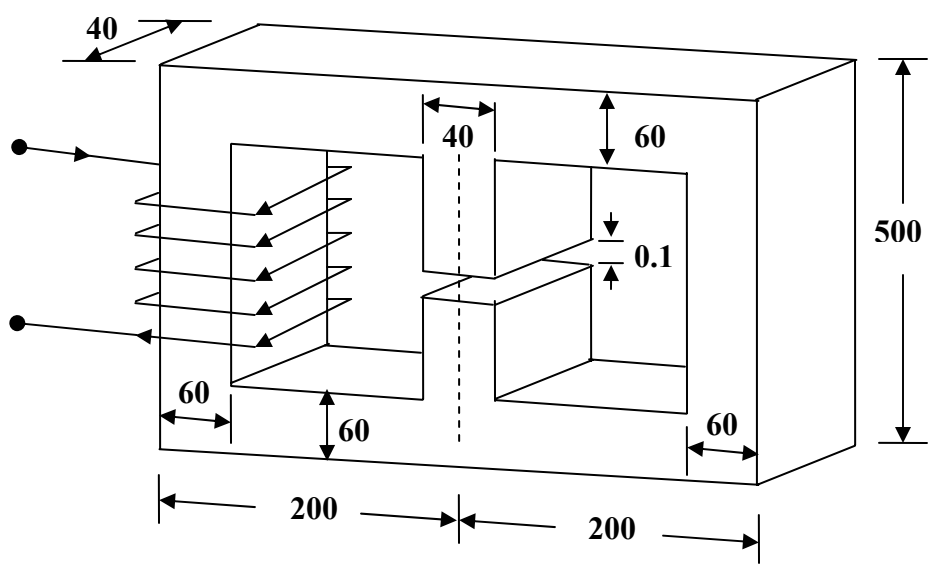

Figure 21.14: For Q B1.

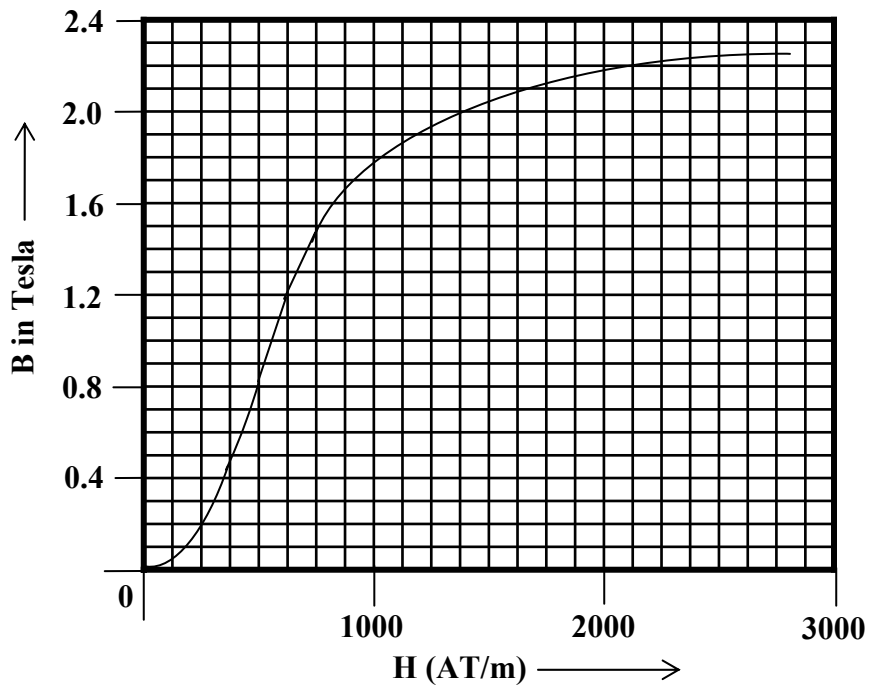

Figure 21.15: For Q B1.

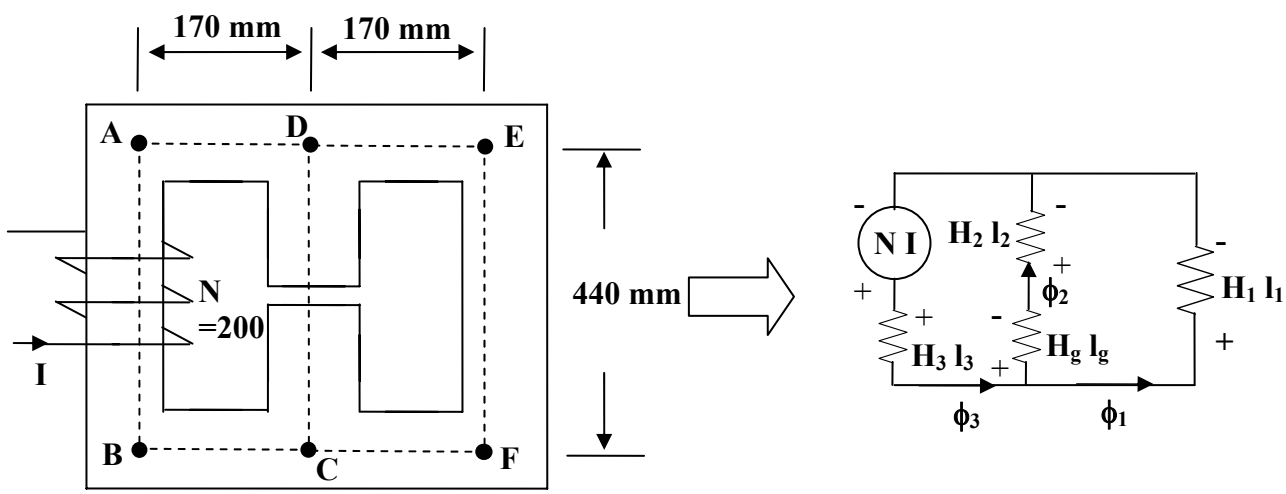

Figure 21.16: Circuit showing mean lengths.

$$\phi_g = \phi_2 = 1.28 \times 10^{-3}$$

Cross sectional area of central limb A_2 = 16 × 10-4 m^2

$$\text{Flux density } B_g = B_2 = \frac{1.28\times10^{-3}}{16\times10^{-4}}\text{T}$$

$$= 0.8 \text{ T}$$

$$\therefore, H_g = \frac{B_g}{\mu_0} = \frac{0.8}{4\pi\times10^{-7}}\text{AT/m}$$

$$= 63.66 \times 10^4 \text{ AT/m}$$

$$\text{mmf required for gap } H_g l_g = 63.66 \times 10^4 \times 1 \times 10^{-4} \text{ AT}$$

$$= 63.66 \text{ AT}$$

Now we must calculate the mmf required in the iron portion of the central limb as follows:

$$\text{flux density, } B_2 = 0.8 \text{ T} \because \text{ fringing \& leakage neglected}$$

$$\text{corresponding H from graph, } H_2 \approx 500 \text{ AT /m}$$

$$\text{Mean iron length, } l_2 = (440 - 0.1) \text{ mm}$$

$$\approx 0.44 \text{ m}$$

$$\text{mmf required for iron portion, } H_2 l_2 = 220 \text{ AT}$$

$$\text{Total mmf required for iron \& air gap, } = (220 + 63.66) \text{ AT}$$

$$mmf_{CD} = 283.66 \text{ AT.}$$

Step 5 Due to parallel connection, mmf acting across path 1 is same as mmf acting across path 2. Our intention here, will be to calculate ϕ_1 in path 1.

$$\text{mean length of the path, } l_1 = l_{DE} + l_{EF} + l_{FC}$$

$$= 2 \times 170 + 440 \text{ mm}$$

$$= 0.78 \text{ m}$$

$$\because H_1 = \frac{283.66}{0.78}$$

$$= 363.67 \text{ AT /m}$$

$$\text{corresponding flux density from graph, } B_1 \approx 0.39 \text{ T}$$

$$\therefore \text{ flux, } \phi_1 = B_1 A_1$$

$$= 0.39 \times 24 \times 10^{-4} \text{ Wb}$$

$$\therefore \phi_1 = 0.94 \times 10^{-3} \text{ Wb}$$

Step 6 In this step we calculate the mmf necessary to drive ϕ_3 in path 3 as follows.

$$\text{flux in path 3, } \phi_3 = \phi_1 + \phi_2$$

$$= 2.22 \times 10^{-3} \text{ Wb}$$

$$\text{flux density, } B_3 = \frac{\phi_3}{A_3}$$

$$= \frac{2.22 \times 10^{-3}}{24 \times 10^{-4}}$$

$$\therefore B_3 = 0.925 \text{ T}$$

$$\text{corresponding H from graph, } H_3 \approx 562.5 \text{ AT /m}$$

$$\text{mean length of path 3, } l_3 = 2 \times 170 + 440 \text{ mm}$$

$$= 0.78 \text{ m}$$

$$\text{total mmf required for path 3} = H_3 l_3$$

$$= 562.5 \times 0.78 \text{ AT}$$

$$= 438.7 \text{ AT}$$

$$\therefore \text{ mmf to be supplied by the coil, } NI = 283.66 + 438.7 \text{ AT}$$

$$\text{or } 200I = 722.36 \text{ AT}$$

$$\therefore \text{ exciting current needed, } I = \frac{722.36}{200} \text{ A}$$

$$= 3.61 \text{ A}$$

21.8 Answer the following:

1. Clearly state Ampere's circuital law?
2. Write down the expression for reluctance. What is its unit?
3. What is mean length and its importance?
4. Give two magnetic materials with permeabilities μ_1 and μ_2 with $\mu_1 > \mu_2$.
5. Which of these two, you will choose to make a magnetic circuit and why?
6. Why not the operating point is selected in the saturation zone of the B-H characteristic?
7. 2 mWb is to be produced in the air gap of the magnetic circuit shown in figure 21.17. How much ampere turns the coil must provide to achieve this?

   Relative permeability μ_r of the core material may be assumed to be constant and equal to 5000. All the dimensions shown are in cm and the sectional area is 25cm^2 through out.

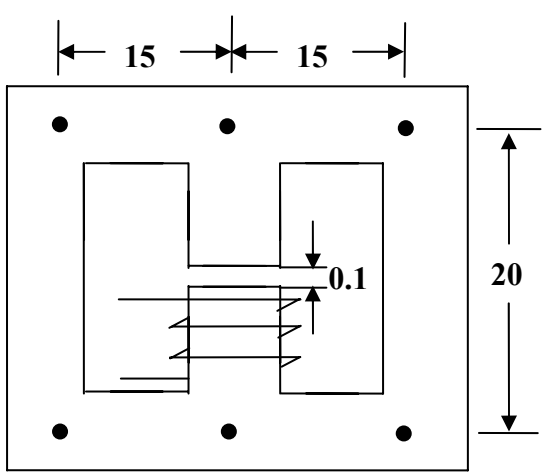

Figure 21.17:

21.9 Tick the correct choice

1. In the magnetic circuit shown in Figure 21.18, the second coil carries a current of 2 A. If flux in the core is to be made zero, the current I in the first coil should be

   (A) + 4 A (B) – 2 A (C) – 4 A (D) + 2 A

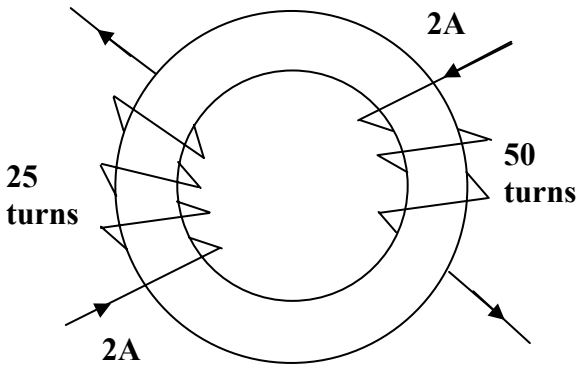

Figure 21.18:

2. A magnetic circuit has a continuous core of a ferromagnetic material. Coil is supplied from a battery and draws a certain amount of exciting current producing a certain amount of flux in the core. If now an air gap is introduced in the core, the exciting current will:

   (A) increase. (B) remain same. (C) decrease (D) become 0.

3. For the magnetic circuit shown in figure 21.19 the reluctance of the central limb (PS) is 10×10^5 AT/Wb and the reluctance of the outer limbs (PTS and PQS) are same and equal to 15×10^5 AT/Wb. To produce 0.5 mWb in PQS, the mmf to be produced by the coil is:

   (A) 750 AT (B) 1750 AT (C) 250 AT (D) 1500 AT.

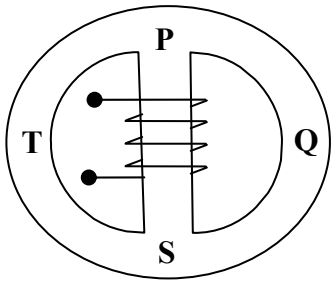

Figure 21.19:

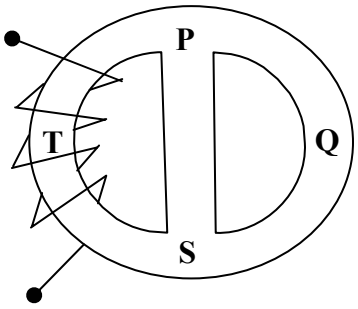

Figure 21.20:

4. For the magnetic circuit shown in figure 21.20 the reluctance of the central limb (PS) is 10 × 105 AT/Wb and the reluctance of the outer limbs (PTS and PQS) are same and equal to 15 × 105 AT/ Wb. To produce 0.5 mWb in PQS, the mmf to be produced by the coil is:

   (A) 2625 AT (B) 1125 AT (C) 750 AT (D) 1875 AT.

5. A magnetic circuit draws a certain amount of alternating sinusoidal exciting current producing a certain amount of alternating flux in the core. If an air gap is introduced in the core path, the exciting current will:

(A) increase (B) remain same. (C) decrease. (D) vanish.

Module 6

Magnetic Circuits and Core Losses

Lesson 22

Eddy Current & Hysteresis Loss

Contents

22 Eddy Current & Hysteresis Losses (Lesson 22) 4

22.1 Lesson goals ……. 4

22.2 Introduction …….. 4

22.2.1 Voltage induced in a stationary coil placed in a time varying field … 5

22.2.2 Eddy current …… 7

22.2.3 Use of *thin* plates or *laminations* for core ……... 7

22.2.4 Derivation of an expression for eddy current loss in a thin plate …… 8

22.3 Hysteresis Loss …… 10

22.3.1 Undirectional time varying exciting current ……... 10

22.3.2 Energy stored, energy returned & energy density…… 10

22.4 Hysteresis loop with alternating exciting current ……. 12

22.4.1 Hysteresis loss & loop area ……. 13

22.5 Seperation of core loss ……. 14

22.6 Inductor …… 16

22.7 Force between two opposite faces of the core across an air gap …….. 18

22.8 Tick the correct answer …… 19

22.9 Solve the following……... 20

Chapter 22

Eddy Current & Hysteresis Losses (Lesson 22)

22.1 Lesson goals

In this lesson we shall show that (i) a time varying field will cause *eddy currents* to be induced in the core causing power loss and (ii) *hysteresis* effect of the material also causes additional power loss called *hysteresis loss*. The effect of both the losses will make the core hotter. We must see that these two losses, (together called *core loss*) are kept to a minimum in order to increase efficiency of the apparatus such as transformers & rotating machines, where the core of the magnetic circuit is subjected to time varying field. If we want to minimize something we must know the origin and factors on which that something depends. In the following sections we first discuss *eddy current phenomenon* and then the phenomenon of *hysteresis*.
Finally expressions for (i) inductance, (ii) stored energy density in a magnetic field and (iii) force between parallel faces across the air gap of a magnetic circuit are derived.
Key Words: Hysteresis loss; hysteresis loop; eddy current loss; Faraday's laws;

After going through this section students will be able to answer the following questions. After going through this lesson, students are expected to have clear ideas of the following:

1. Reasons for core losses.
2. That core loss is sum of hysteresis and eddy current losses.
3. Factors on which hysteresis loss depends.
4. Factors on which eddy current loss depends.
5. Effects of these losses on the performance of magnetic circuit.
6. How to reduce these losses?
7. Energy storing capability in a magnetic circuit.
8. Force acting between the parallel faces of iron separated by air gap.
9. Iron cored inductance and the factors on which its value depends.

22.2 Introduction

While discussing magnetic circuit in the previous lesson (no. 21) we assumed the exciting current to be constant d.c. We also came to know how to calculate flux (ϕ) or flux density (B) in the core for a constant exciting current. When the exciting current is a function of time, it is expected that flux (ϕ) or flux density (B) will be functions of time too, since ϕ produced depends on i. In addition if the current is also alternating in nature then both the

magnitude of the flux and its direction will change in time. The magnetic material is now therefore subjected to a time varying field instead of steady constant field with d.c excitation. Let:

$$\begin{aligned}
\text{The exciting current } i(t) &= I_{max} \sin \omega t \\
\text{Assuming linearity, flux density } B(t) &= \mu_0\, \mu_r\, H(t) \\
&= \mu_0\, \mu_r \frac{Ni}{l} \\
&= \mu_0\, \mu_r \frac{N\, I_{max} \sin \omega t}{l} \\
\therefore B(t) &= B_{max} \sin \omega t
\end{aligned}$$

22.2.1 Voltage induced in a stationary coil placed in a time varying field

If normal to the area of a coil, a time varying field $\phi(t)$ exists as in figure 22.1, then an emf is induced in the coil. This emf will appear across the free ends 1 & 2 of the coil. Whenever we talk about some voltage or emf, two things are important, namely the magnitude of the voltage and its polarity. Faraday's law tells us about the both. Mathematically it is written as $e(t) = -N\frac{d\phi}{dt}$

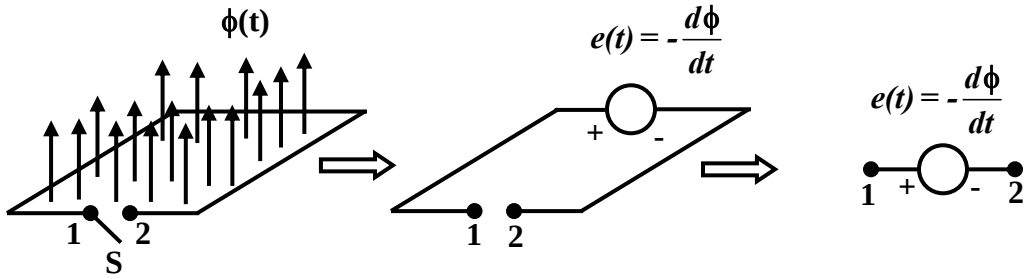

Figure 22.1:

Let us try to understand the implication of this equation a bit deeply. $\phi(t)$ is to be taken normal to the surface of the coil. But a surface has two *normals*; one in the upward direction and the other in downward direction for the coil shown in the figure. Which one to take? The choice is entirely ours. In this case we have chosen the normal along the upward direction. This direction is obtained if you start your journey from the terminal-2 and reach the terminal-1 in the anticlockwise direction along the contour of the coil. Once the direction of the normal is chosen what we have to do is to express $\phi(t)$ along the same direction. Then calculate $N\frac{d\phi}{dt}$ and put a – ve sign before it. The result obtained will give you e_{12} i.e., potential of terminal-1 wrt terminal-2. In other words, the whole coil can be considered to be a source of emf wrt terminals 1 & 2 with polarity as indicated. If at any time flux is increasing with time in the upward direction, $\frac{d\phi}{dt}$ is + ve and e_{12} will come out to be – ve as well at that time. On the other hand, at any time flux is decreasing with time in the upward direction, $\frac{d\phi}{dt}$ is – ve and e_{12} will come out to be + ve as well at that time. Mathematically let:

$$
\begin{aligned}
\text{Flux density } B(t) &= B_{max} \sin \omega t \\
\text{Area of the coil} &= A \\
\text{Flux crossing the area } \phi(t) &= B(t)\, A \\
&= B_{max}\, A \sin \omega t \\
&= \phi_{max} \sin \omega t \\
\text{Induced voltage in the coil } e_{12} &= -N \frac{d\phi}{dt} \\
&= -1 \times \frac{d\phi}{dt} \quad \because\ N = 1 \text{ here} \\
&= \phi_{max} \omega \cos \omega t \\
\therefore\ e_{12} &= E_{max} \cos \omega t \\
\text{RMS value of } e_{12}\ E &= \frac{\phi_{max}\omega}{\sqrt{2}} \\
\therefore\ \boldsymbol{E} &= \sqrt{2}\boldsymbol{\pi}\ \boldsymbol{f}\, \boldsymbol{\phi_{max}} \text{ putting } \omega = 2\pi f
\end{aligned}
$$

If the switch S is closed, this voltage will drive a circulating current i_c in the coil the direction of which will be such so as to oppose the cause for which it is due. Correct instantaneous polarity of the induced voltage and the direction of the current in the coil are shown in figure 22.2, for different time intervals with the switch S closed. In the interval $0 < \omega t < \frac{\pi}{2}, \frac{d\phi}{dt}$ is + ve

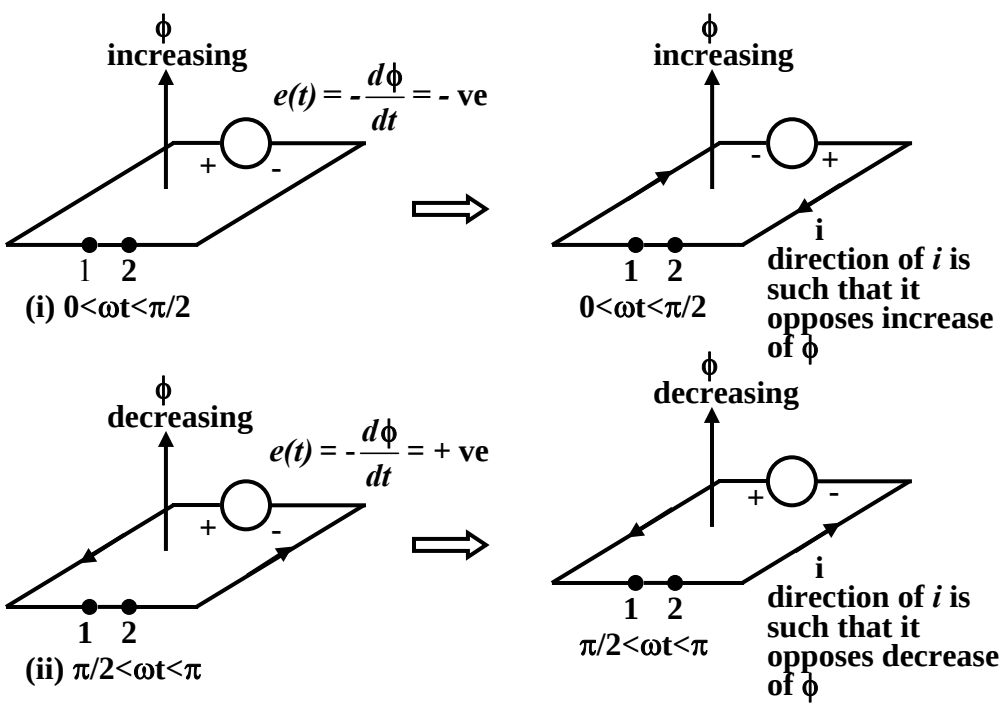

Figure 22.2: Direction of induced current.

22.2.2 Eddy current

Look at the Figure 22.3 where a rectangular core of magnetic material is shown along with the exciting coil wrapped around it. Without any loss of generality, one may consider this to be a part of a magnetic circuit. If the coil is excited from a sinusoidal source, exciting current flowing will be sinusoidal too. Now put your attention to any of the cross section of the core and imagine any arbitrary rectangular closed path *abcd*. An emf will be induced in the path *abcd* following Faraday's law. Here of course we don't require a switch S to close the path because the path is closed by itself by the conducting magnetic material (say iron). Therefore a circulating current i_{eddy} will result. The direction of i_{eddy} is shown at the instant when $B(t)$ is increasing with time. It is important to note here that to calculate induced voltage in the path, the value of flux to be taken is the flux enclosed by the path i.e., $\phi_{max} = B_{max} \times$ area of the loop abcd. The magnitude of the eddy current will be limited by the *path resistance*, R_{path} neglecting reactance effect. Eddy current will therefore cause power loss in R_{path} and heating of the core. To calculate the total eddy current loss in the material we have to add all the power losses of different eddy paths covering the whole cross section.

22.2.3 Use of *thin* plates or *laminations* for core

We must see that the power loss due to eddy current is minimized so that heating of the core is reduced and efficiency of the machine or the apparatus is increased. It is obvious if the cross sectional area of the eddy path is reduced then eddy voltage induced too will be reduced ($E_{eddy} \infty$ area), hence eddy loss will be less. This can be achieved by using several thin electrically insulated plates (called laminations) stacked together to form the core instead a solid block of iron. The idea is depicted in the Figure 22.4 where the plates have been shown for clarity, rather separated from each other. While assembling the core the *laminations* are kept closely pact. Conclusion is that solid block of iron should not be

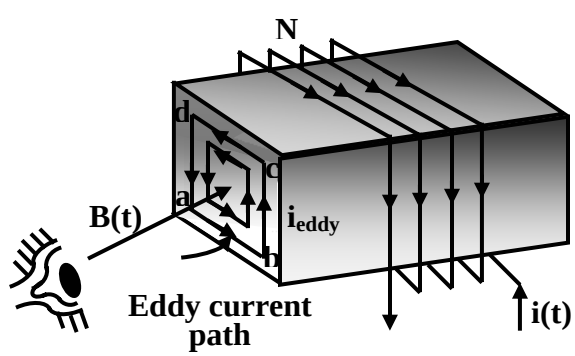

Figure 22.3: Eddy current paths

used to construct the core when exciting current will be ac. However, if exciting current is dc, the core need not be laminated.

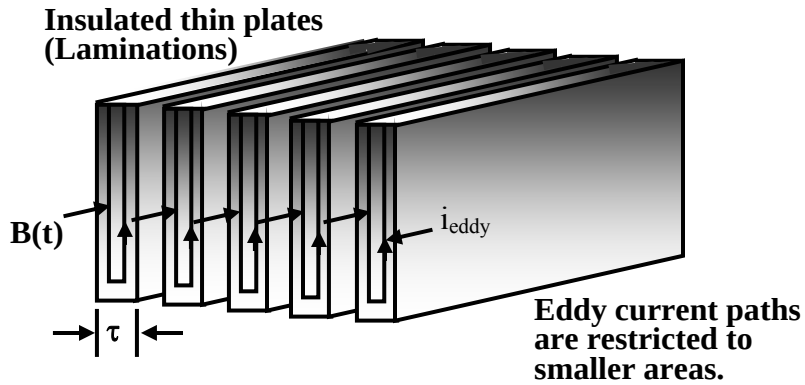

Figure 22.4: Laminated core to reduce eddy loss.

22.2.4 Derivation of an expression for eddy current loss in a thin plate

From physical consideration we have seen that *thin* plates each of thickness τ, are to be used to reduce eddy loss. With this in mind we shall try to derive an approximate expression for eddy loss in the following section for a thin plate and try to identify the factors on which it will depend. Section of a thin plate $\tau << L$ and h is shown in the plane of the screen in Figure 22.5.

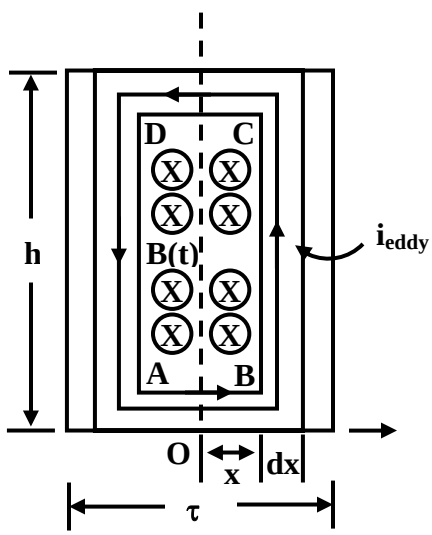

Figure 22.5: Elemental eddy current path.

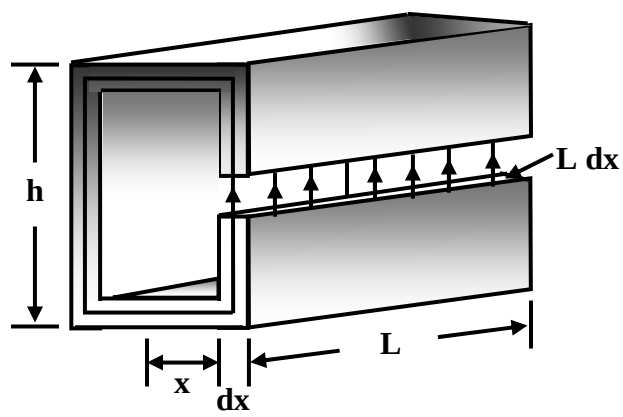

Figure 22.6: Section of the elemental eddy current path.

Eddy current loss is essentially I^2R loss occurring inside the core. The current is caused by the induced voltage in any conceivable closed path due to the time varying field as shown in the diagram 22.5.

Let us consider a thin magnetic plate of length L, height h and thickness τ such that τ is very small compared to both L and h. Also let us assume a sinusoidally time varying field $b = B_{max} sin\omega t$ exists perpendicular to the rectangular area formed by τ and h as shown in figure 22.5.

Let us consider a small elemental rectangular closed path ABCDA of thickness dx and at a distance x from the origin. The loop may be considered to be a single coil through which time varying flux is crossing. So there will be induced voltage in it, in

similar manner as voltage is induced in a coil of single turn shown in the previous section. Now,

$$\text{Area of the loop ABCD} = 2hx$$

$$\text{Flux crossing the loop} = B_{max}\, 2hx \sin \omega t$$

$$\text{RMS voltage induced in the loop, } E = \sqrt{2}\pi\, f\, B_{max}\, 2hx$$

$$\text{Resistance of the path through which eddy current flows, } R_{path} = \frac{\rho\left(2h+4x\right)}{L\,dx}$$

To derive an expression for the eddy current loss in the plate, we shall first calculator the power loss in the elemental strip and then integrate suitably to for total loss. Power loss in the loop *dP* is given by:

$$dP = \frac{E^2}{R_{path}}$$

$$= \frac{E^2 L\, dx}{\rho\left(2h+4x\right)}$$

$$= \frac{E^2 L\ dx}{\rho 2h} \quad since\ \ \tau << h$$

$$\text{Total eddy current loss, } P_{eddy} = \frac{4\pi^2\, B_{max}^2\, f^2\, hL}{\rho}\int_{x=0}^{\frac{\tau}{2}} x^2\, dx$$

$$= \frac{\pi^2 f^2 B_{max}^2 \tau^2}{6\rho}\left(hL\tau\right)$$

$$\text{Volume of the thin plate} = hL\tau$$

$$\text{Eddy loss per unit volume, boldmath } P_{eddy} = \frac{\pi^2 f^2 B_{max}^2 \tau^2}{6\rho}$$

$$\text{or, } Peddy = k_e f^2 B_{max}^2 \tau^2$$

Thus we find eddy current loss per unit volume of the material directly depends upon the *square* of the *frequency, flux density and thickness* of the plate. Also it is inversely proportional to the *resistivity* of the material. The core of the material is constructed using thin plates called laminations. Each plate is given a *varnish coating* for providing necessary insulation between the plates. *Cold Rolled Grain Oriented*, in short CRGO sheets are used to make transformer core.

22.3 Hysteresis Loss

22.3.1 Unidirectional time varying exciting current

Consider a magnetic circuit with constant (d.c) excitation current I_0. Flux established will have fixed value with a fixed direction. Suppose this final current I_0 has been attained from zero current slowly by energizing the coil from a potential divider arrangement as depicted in Figure 22.7. Let us also assume that initially the core was not magnetized. The exciting current therefore becomes a function of time till it reached the desired current I and we stopped further increasing it. The flux too naturally will be function of time and cause induced voltage e_{12} in the coil with a polarity to oppose the increase of inflow of current as shown. The coil becomes a source of emf with terminal-1, +ve and terminal-2, -ve. Recall that a source in which current enters through its +ve terminal absorbs power or energy while it delivers power or energy when current comes out of the +ve terminal. Therefore during the interval when $i(t)$ is increasing the coil absorbs energy. Is it possible to know how much energy does the coil absorb when current is increased from 0 to I_0? This is possible if we have the B-H curve of the material with us.

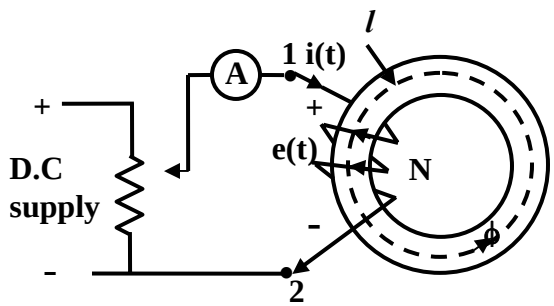

Figure 22.7:

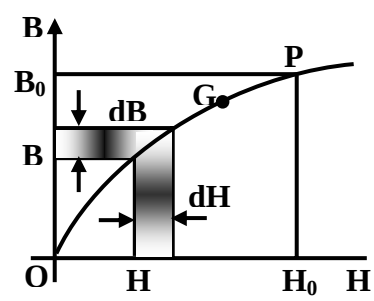

Figure 22.8:

22.3.2 Energy stored, energy returned & energy density

Let:

i = current at time t
H = field intensity corresponding to i at time t
B = flux density corresponding to i at time t

(22.1)

Let an infinitely small time dt elapses so that new values become:

$i + di$ = Current at time $t + dt$

$H + dH$ = Field intensity corresponding to $i + di$ at time $t + dt$

$B + dB$ = Flux density corresponding to $i + di$ at time $t + dt$

Voltage induced in the coil e_{12} = $N\dfrac{d\phi}{dt}$

$$= NA\frac{dB}{dt}$$

Power absorbed at t $= e_{12}i$

$$= NA\frac{dB}{dt}i$$

$$= A\,l\,H\frac{dB}{dt} \quad noting,\ H = \frac{Ni}{l}$$

Energy absorbed in time dt, dW $= A\,l\,H\frac{dB}{dt}i \times dt$

$$= A\,l\,H\,dB$$

total energy absorbed per unit volume, *W* $= \int_0^{B_0} \boldsymbol{H\,dB}$

Graphically therefore, the closed area $OKPB_0BO$ is a measure of the energy stored by the field in the core when current is increased from 0 to I_0. What happens if now current is gradually reduced back to 0 from I_0? The operating point on B-H curve does not trace back the same path when current was increasing from 0 to I_0. In fact, B-H curve (PHT) remains above during decreasing current with respect the B-H curve (OGP) during increasing current as shown in figure 22.9. This lack of retracing the same path of the curve is called *hysteresis*. The portion OGP should be used for increasing current while the portion (PHT) should be used for decreasing current. When the current is brought back to zero external applied field H becomes zero and the material is left magnetized with a residual field OT. Now the question is when the exciting current is decreasing, does the coil absorb or return the energy back to supply. In this case $\frac{dB}{dt}$ being –ve, the induced voltage reverses its polarity although direction of i remains same. In other words, current leaves from the +ve terminal of the induced voltage thereby returning power back to the supply. Proceeding in the same fashion as adopted for increasing current, it can be shown that the area PMTRP represents amount of energy returned per unit volume. Obviously energy absorbed during rising current from 0 to I_0 is more than the energy returned during lowering of current from I_0 to 0. The balance of the energy then must have been lost as heat in the core.

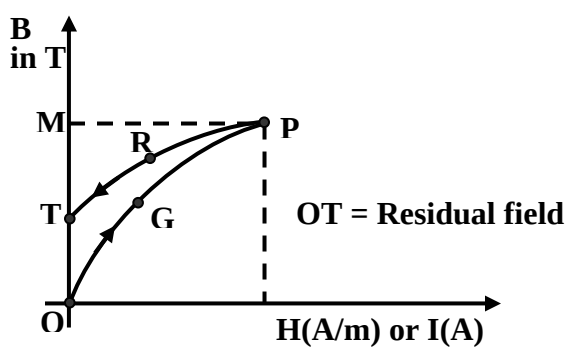

Figure 22.9:

22.4 Hysteresis loop with alternating exciting current

In the light of the above discussion, let us see how the operating point is traced out if the exciting current is $i = I_{max} \sin \omega t$. The nature of the current variation in a complete cycle can be enumerated as follows:

In the interval $0 \le \omega t \le \frac{\pi}{2}$: i is +ve and $\frac{di}{dt}$ is +ve.

In the interval $\frac{\pi}{2} \le \omega t \le \pi$: i is +ve and $\frac{di}{dt}$ is –ve.

In the interval $\pi \le \omega t \le \frac{3\pi}{2}$: i is –ve and $\frac{di}{dt}$ is –ve.

In the interval $\frac{3\pi}{2} \le \omega t \le 2\pi$: i is –ve and $\frac{di}{dt}$ is +ve.

Let the core had no residual field when the coil is excited by $i = I_{max} \sin \omega t$. In the interval $0 < \omega t < \frac{\pi}{2}$, B will rise along the path OGP. Operating point at P corresponds to $+I_{max}$ or $+H_{max}$. For the interval $\frac{\pi}{2} < \omega t < \pi$ operating moves along the path PRT. At point T, current is zero. However, due to sinusoidal current, i starts increasing in the –ve direction as shown in the Figure 22.10 and operating point moves along TSEQ. It may be noted that a –ve H of value OS is necessary to bring the residual field to zero at S. OS is called the *coercivity* of the material. At the end of the interval $\pi < \omega t < \frac{3\pi}{2}$, current reaches $-I_{max}$ or field $-H_{max}$. In the next internal, $\frac{3\pi}{2} < \omega t < 2\pi$, current changes from $-I_{max}$ to zero and operating point moves from M to N along the path MN. After this a new cycle of current variation begins and the operating point now never enters into the path OGP. The movement of the operating point can be described by two paths namely: (i) QFMNKP for increasing current from $-I_{max}$ to $+I_{max}$ and (ii) from $+I_{max}$ to $-I_{max}$ along PRTSEQ.

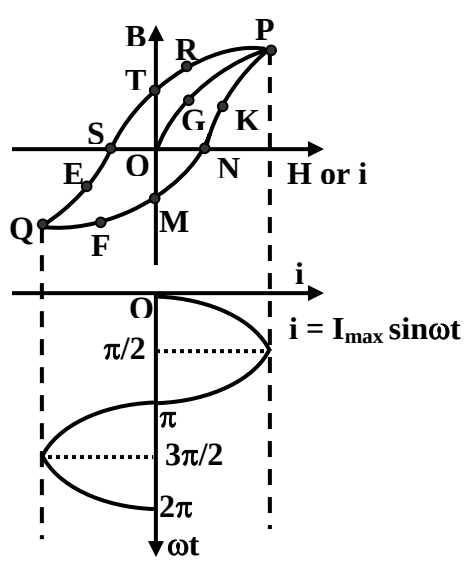

Figure 22.10: B-H loop with sinusoidal current.

22.4.1 Hysteresis loss & loop area

In other words the operating point trace the *perimeter* of the closed area QFMNKPRTSEQ. This area is called the B-H loop of the material. We will now show that the area enclosed by the loop is the *hysteresis loss* per unit volume per cycle variation of the current. In the interval $0 \le \omega t \le \frac{\pi}{2}$, i is +ve and $\frac{di}{dt}$ is also +ve, moving the operating point from M to P along the path MNKP. Energy *absorbed* during this interval is given by the shaded area MNKPLTM shown in Figure 22.11 (i).

In the interval $\frac{\pi}{2} \le \omega t \le \pi, i$ is +ve but $\frac{di}{dt}$ is –ve, moving the operating point from P to T along the path PRT. Energy *returned* during this interval is given by the shaded area PLTRP shown in Figure 22.11 (ii). Thus during the +ve half cycle of current variation net amount of energy absorbed is given by the shaded area MNKPRTM which is nothing but half the area of the loop.

In the interval $\pi \le \omega t \le \frac{3\pi}{2}$, i is –ve and $\frac{di}{dt}$ is also –ve, moving the operating point from T to Q along the path TSEQ. Energy *absorbed* during this interval is given by the shaded area QJMTSEQ shown in Figure 22.11 (iii).

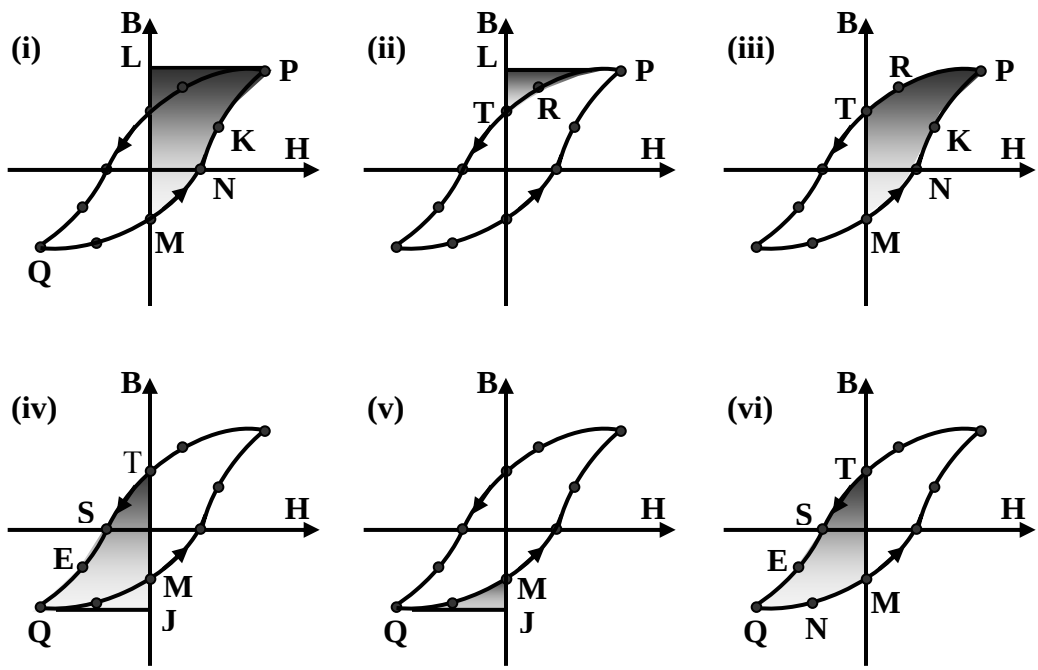

Figure 22.11: B-H loop with sinusoidal current.

In the interval $\frac{3\pi}{2} \le \omega t \le 2\pi$, i is –ve but $\frac{di}{dt}$ is + ve, moving the operating point from Q to M along the path QEM. Energy *returned* during this interval is given by the shaded area QJMFQ shown in Figure 22.11 (iv).

Thus during the –ve half cycle of current variation net amount of energy absorbed is given by the shaded area QFMTSEQ which is nothing but the other half the loop area.

Therefore total area enclosed by the B-H loop is the measure of the hysteresis loss per unit volume per unit cycle. To reduce hysteresis loss one has to use a core material for which area enclosed will be as small as possible.

Steinmetz's empirical formula for hysteresis loss

Based on results obtained by experiments with different ferromagnetic materials with sinusoidal currents, Charles Steimetz *proposed* the empirical formula for calculating hysteresis loss analytically.

$$\text{Hysteresis loss per unit volume, } P_h = k_h \, f \, B_{\max}^n$$

Where, the coefficient k_h depends on the material and n, known as Steinmetz exponent, may vary from 1.5 to 2.5. For iron it may be taken as 1.6.

22.5 Seperation of core loss

The sum of hyteresis and eddy current losses is called core loss as both the losses occur within the core (magnetic material). For a given magnetic circuit with a core of ferromagnetic material, volume and thickness of the plates are constant and the total core loss can be expressed as follows.

$$\text{Core loss} = \text{Hysteresis loss} + \text{Eddy current loss}$$
$$P_{core} = K_h \, f \, B_{\max}^n + K_e \, f^2 \, B_{\max}^2$$

It is rather easier to measure the core loss with the help of a wattmeter (W) by energizing the N turn coil from a sinusoidal voltage of known frequency as shown in figure 22.12.

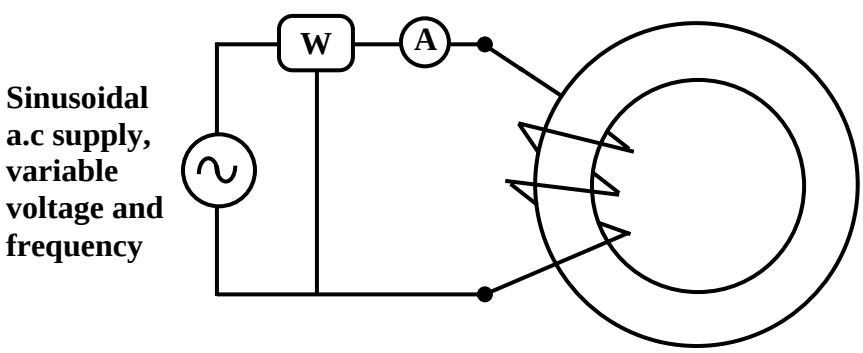

Figure 22.12: Core loss measurement.

Let A be the cross sectional area of the core and let winding resistance of the coil be negligibly small (which is usually the case), then equating the applied rms voltage to the induced rms voltage of the coil we get:

$$V \approx \sqrt{2}\pi f \phi_{\max} N$$

$$\text{Or, } V = \sqrt{2}\pi f \; B_{\max} AN$$

$$\text{So, } B_{\max} = \frac{V}{\sqrt{2}\pi f \; AN}$$

$$\therefore B_{\max} \propto \frac{V}{f}$$

The above result i.e., $B_{\max} \propto \frac{V}{f}$ is important because it tells us that to keep $B_{\max}$ constant at rated value at lower frequency of operation, applied voltage should be proportionately decreased. In fact, from the knowledge of N (number of turns of the coil) and A (cross sectional area of the core), V (supply voltage) and f (supply frequency) one can estimate the maximum value of the flux density from the relation $B_{\max} = \frac{V}{\sqrt{2}\pi f \; AN}$. This point has been further discussed in the future lesson on transformers.

Now coming back to the problem of separation of core loss into its components: we note that there are three unknowns, namely K_h, K_e and n (Steinmetz's exponent) to be determined in the equation $P_{core} = K_h f B_{\max}^n + K_e f^2 B_{\max}^2$. LHS of this equation is nothing but the wattmeter reading of the experimental set up shown in Figure 22.12. Therefore, by noting down the wattmeter readings corresponding to three different applied voltages and frequencies, we can have three independent algebraic equations to solve for K_h, K_e and n. However, to simplify the steps in solving of the equations two readings may be taken at same flux density (keeping $\frac{V}{f}$ ratio constant) and the third one at different flux density. To understand this, solve the following problem and verify the answers given.

For a magnetic circuit, following results are obtained.

Frequency	$B_{\max}$	Core loss
50 Hz	1.2 T	115 W
30 Hz	1.2 T	60.36 W
30 Hz	1.4 T	87.24 W

Estimate the constants, K_h, K_e and n and separate the core loss into hysteresis and eddy losses at the above frequencies and flux densities.
The answer of the problem is:

Frequency	$B_{\max}$	Core loss	Hyst loss	Eddy loss
50 Hz	1.2 T	115 W	79 W	36 W
30 Hz	1.2 T	60.36 W	47.4 W	12.96 W
30 Hz	1.4 T	87.24 W	69.6 W	17.64 W

22.6 Inductor

One can make an inductor L, by having several turns N, wound over a core as shown in figure 22.13. In an *ideal* inductor, as we all know, no power loss takes place. Therefore, we must use a very good magnetic material having negligible B-H loop area. Also we must see that the operating point lies in the linear zone of the B-H characteristic in order to get a constant value of the inductance. This means μ_r may be assumed to be constant. To make eddy current loss vanishingly small, let us assume the lamination thickness is extremely small and the core material has a very high resistivity ρ. Under these assumptions let us derive an expression for the inductance L, in order to have a feeling on the factors it will depend upon. Let us recall that inductance of a coil is defined as the flux linkage with the coil when 1 A flows through it.

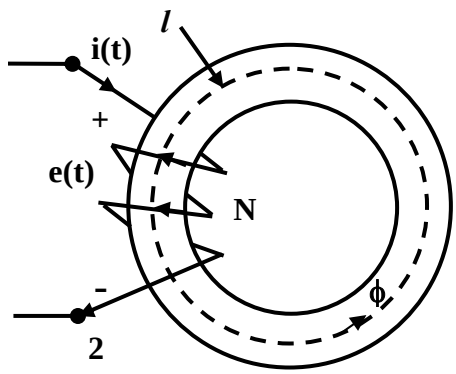

Figure 22.13: An inductor.

Let ϕ be the flux produced when i A flows through the coil. Then by definition:

$$\begin{aligned}
\text{Total flux linkage} &= N\phi \\
\therefore \text{inductance is } L &= \frac{N\phi}{i} \text{ by definition.} \\
&= \frac{N\,B\,A}{i} \quad \because \phi = B \times A \\
&= \frac{N\,\mu_0\,\mu_r\,H\,A}{i} \quad \because B = \mu_0\,\mu_r\,H \\
&= \mu_0\,\mu_r\,\frac{N\,H\,A}{i} \\
&= \mu_0\,\mu_r\,\frac{N\,\frac{Ni}{l}\,A}{i} \quad \text{putting } H = \tfrac{Ni}{l} \\
\textbf{Finally, } \boldsymbol{L} &= \boldsymbol{\mu_0\,\mu_r\,\frac{N^2 A}{l}}
\end{aligned}$$

The above equation relates *inductance* with the dimensions of the magnetic circuit, number of turns and permeability of the core in the similar way as we relate

resistance of a wire, with the dimensions of the wire and the resistivity (recall, $R = \rho \frac{l}{A}$). It is important to note that L is directly proportional to the square of the number of turns, directly proportional to the sectional area of the core, directly proportional to the permeability of the core and inversely proportional to the mean length of the flux path. In absence of any core loss and linearity of B-H characteristic, Energy stored during increasing current from 0 to I is exactly equal to the energy returned during decreasing current from I to 0. From our earlier studies we know for increasing current:

$$\text{Voltage induced in the coil} \quad e = N A \frac{dB}{dt}$$

$$\begin{aligned}
\text{Energy absorbed in time } dt \text{ is } dW &= e\, i\, dt\, NA \frac{dB}{dt} \\
&= N\, A \frac{dB}{dt} i\, dt \\
&= N\, i\, A\, d\, B \\
&= A\, l\, H\, d\, B \\
\text{Energy absorbed to reach } I \text{ or } B &= A\, l \int_0^B H\, dB \\
&= A\, l \int_0^B \frac{B}{\mu_0 \mu_r} dB \\
&= A\, l \frac{B^2}{2\, \mu_0\, \mu_r} \\
\textbf{Energy stored per unit volume} &= \frac{B^2}{2 \mu_0 \mu_r}
\end{aligned}$$

By expressing B in terms of current, I in the above equation one can get a more familiar expression for energy stored in an inductor as follows:

$$\begin{aligned}
\text{Energy absorbed to reach } I \text{ or } B &= A\, l \frac{B^2}{2\mu_0\, \mu_r} \\
&= A\, l \frac{(\mu_0\, \mu_r H)^2}{2\mu_0\, \mu_r} \\
&= A\, l \frac{\mu_0\, \mu_r\, H^2}{2} \\
&= A\, l \mu_0\, \mu_r \frac{(N\, I)^2}{2 l^2} \\
&= \frac{1}{2}\left(\frac{\mu_0\, \mu_r\, A\, N^2}{l}\right) I^2 \\
\therefore \textbf{Energy stored in the inductor} &= \frac{1}{2} \boldsymbol{L\, I^2}
\end{aligned}$$

22.7 Force between two opposite faces of the core across an air gap

In a magnetic circuit involving *air gap*, magnetic force will exist between the parallel faces across the air gap of length x. The situation is shown for a magnetic circuit in figure 22.14 (i). Direction of the lines of forces will be in the clockwise direction and the left face will become a north pole and the right face will become a south pole. Naturally there will be force of *attraction* F_a between the faces. Except for the fact that this force will develop stress in the core, no physical movement is possible as the structure is *rigid*.

$$\begin{aligned}
\text{Let the flux density in the air gap be} &= B \\
\text{energy stored per unit volume in the gap} &= \frac{B^2}{2\mu_0} \\
\text{gap volume} &= A\,x \\
\text{Total energy stored} &= \frac{B^2}{2\mu_0} \times \text{gap volume} \\
&= \frac{B^2}{2\mu_0} A\,x
\end{aligned} \tag{22.2}$$

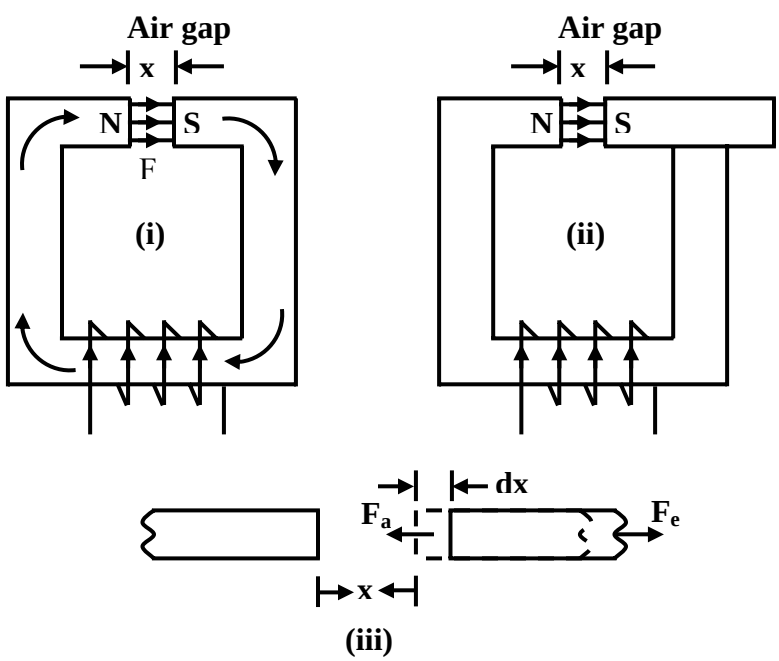

Figure 22.14: Force between parallel faces.

Easiest way to derive expression for F_a is to apply law of conservation of energy by using the concept of *virtual work*. To do this, let us *imagine* that right face belongs to a freely moving structure with initial gap x as in figure 22.14 (ii). At this gap x, we have find F_a. Obviously if we want to displace the moving structure by an elemental distance dx to the right, we have apply a force F_e toward right. As dx is very small tending to 0, we can assume B to remain unchanged. The magnitude of this external force F_e has to be

same as the prevailing force of attraction F_a between the faces. Where does the energy expended by the external agency go? It will go to *increase* the energy stored in the gap as its volume increase by $A\,dx$. Figure 22.14 (iii) shows an expanded view of the gap portion for clarity. Let us put it in mathematical steps as follows:

$$\text{energy stored per unit volume in the gap} = \frac{B^2}{2\mu_0}$$

$$\text{initial gap volume} = A\,x$$

$$\text{Total energy stored, } W_x = \frac{B^2}{2\mu_0} \times \text{gap volume}$$

$$W_x = \frac{B^2}{2\mu_0} A\,x$$

$$\text{let the external force applied be} = F_e$$

$$\text{let the force of attraction be} = F_a$$

$$\text{as explained above, } F_e = F_a$$

$$\text{work done by external agency} = F_e\,dx = F_a\,dx$$

$$\text{increase in the volume of the gap} = A\,(x + dx) - Ax = A\,dx$$

$$\text{increase in stored energy} = \frac{B^2}{2\mu_0} A\,dx$$

$$\text{but work done by external agency} = \text{increase in stored energy}$$

$$F_a\,dx = \frac{B^2}{2\mu_0} A\,dx$$

$$\text{or, desired force of attraction } \boldsymbol{F_a} = \frac{B^2}{2\mu_0} \boldsymbol{A}$$

22.8 Tick the correct answer

1. If the number of turns of a coil wound over a core is halved, the inductance of the coil will become:

   (A) doubled. (B) halved. (C) quadrapuled. (D) ¼ th

2. The expression for eddy current loss per unit volume in a thin ferromagnetic plate of thickness τ is:

   (A) $\frac{1}{6\rho}\pi^2 f^2 B_{\max}^2 \tau^2$ (B) $\frac{\rho}{6}\pi^2 f^2 B_{\max}^2 \tau^2$

   (C) $\frac{1}{6\rho}\pi^2 f^2 B_{\max} \tau^2$ (D) $\frac{1}{6\rho}\pi^2 f\, B_{\max}^2 \tau^2$

3. As suggested by Steinmetz, hyteresis loss in a ferromagnetic material is proportional to:

   (A) $f^n B_{max}$ (B) $f\ B_{max}^n$
   (C) $f^2 B_{max}^2$ (D) $f\ B_{max}^n$

   where, n may very between 1.5 to 2.5 depending upon material.

4. The eddy current loss in a magnetic circuit is found to be 100 W when the exciting coil is energized by 200 V, 50 Hz source. If the coil is supplied with 180 V, 54 Hz instead, the *eddy current loss* will become

   (A) 90 W (B) 81 W (C) 108 W (D) 50 W

5. A magnetic circuit draws a certain amount of alternating sinusoidal exciting current producing a certain amount of alternating flux in the core. If an air gap is introduced in the core path, the exciting current will:

   (A) increase. (B) remain same. (C) decrease. (D) vanish

22.9 Solve the following

1. The area of the hysteresis loop of a 1200 cm^3 ferromagnetic material is 0.9 cm^2 with B_{max} = 1.5 T. The scale factors are 1cm ≡ 10A/m along x-axis and 1 cm = 0.8T along y-axis. Find the power loss in watts due to hysteresis if this material is subjected to an 50 Hz alternating flux density with a peak value 1.5 T.

2. Calculate the core loss per kg in a specimen of alloy steel for a maximum density of 1.1 T and a frequency of 50 Hz, using 0.4 mm plates. Resistivity ρ is 24 $\mu\,\Omega$-cm; density is 7.75 g/cm^3; hysteresis loss 355 J/m^3 per cycle.

3. (a) A linear magnetic circuit has a mean flux length of 100 cm and uniform cross sectional area of 25 cm^2. A coil of 100 turns is wound over it and carries a current of 0.5 A. If relative permeability of the core is 1000, calculate the inductance of the coil and energy stored in the coil.

   (b) In the magnetic circuit of part (a), if an air gap of 2 mm length is introduced calculate (i) the energy stored in the air gap (ii) energy stored in core and (iii) force acting between the faces of the core across the gap for the same coil current.

4. An iron ring with a mean diameter of 35 cm and a cross section of 17.5 cm^2 has 110 turns of wire of negligible resistance. (a) What voltage must be applied to the coil at 50 Hz to obtain a maximum flux density of 1.2 T; the excitation required corresponding to this density 450 AT/m? Find also the inductance. (b) What is the effect of introducing a 2 mm air gap?

5. A coil wound over a core, is designed for 200 V (rms), 50 Hz such that the operating point is on the knee of the B-H characteristic of the core. At this rated voltage and frequency the value of the exciting current is found to be 1 A. Give your comments on the existing current if the coil is energized from:

   (a) 100 V, 25 Hz supply.
   (b) 200 V, 25 Hz supply.

Module 7

Transformer

Lesson 23

Ideal Transformer

Version 2 EE IIT, Kharagpur

Contents

23 Ideal Transformer (Lesson: 23) 4

23.1 Goals of the lesson …… 4

23.2 Introduction …….. 5

23.2.1 Principle of operation …….. 5

23.3 Ideal Transformer…….. 6

23.3.1 Core flux gets fixed by voltage and frequency…… 6

23.3.2 Analysis of ideal transformer……... 7

23.3.3 No load phasor diagram …….. 8

23.4 Transformer under loaded condition …… 9

23.4.1 Dot convention …… 10

23.4.2 Equivalent circuit of an ideal transformer …… 11

23.5 Tick the correct answer …… 12

23.6 Solve the following……... 14

23.1 Goals of the lesson

In this lesson, we shall study two winding *ideal transformer*, its properties and working principle under no load condition as well as under load condition. Induced voltages in primary and secondary are obtained, clearly identifying the factors on which they depend upon. The ratio between the primary and secondary voltages are shown to depend on ratio of turns of the two windings. At the end, how to draw phasor diagram under no load and load conditions, are explained. Importance of studying such a transformer will be highlighted. At the end, several objective type and numerical problems have been given for solving.

Key Words: Magnetising current, HV & LV windings, no load phasor diagram, reflected current, equivalent circuit.

After going through this section students will be able to understand the following.

1. necessity of transformers in power system.
2. properties of an ideal transformer.
3. meaning of load and no load operation.
4. basic working principle of operation under no load condition.
5. no load operation and phasor diagram under no load.
6. the factors on which the primary and secondary induced voltages depend.
7. fundamental relations between primary and secondary voltages.
8. the factors on which peak flux in the core depend.
9. the factors which decides the magnitude of the *magnetizing current*.
10. What does loading of a transformer means?
11. What is reflected current and when does it flow in the primary?
12. Why does VA (or kVA) remain same on both the sides?
13. What impedance does the supply see when a given impedance Z_2 is connected across the secondary?
14. Equivalent circuit of ideal transformer referred to different sides.

23.2 Introduction

Transformers are one of the most important components of any power system. It basically changes the level of voltages from one value to the other at constant frequency. Being a static machine the efficiency of a transformer could be as high as 99%.

Big generating stations are located at hundreds or more km away from the load center (where the power will be actually consumed). Long transmission lines carry the power to the load centre from the generating stations. Generator is a rotating machines and the level of voltage at which it generates power is limited to several kilo volts only –

a typical value is 11 kV. To transmit large amount of power (several thousands of mega watts) at this voltage level means large amount of current has to flow through the transmission lines. The cross sectional area of the conductor of the lines accordingly should be large. Hence cost involved in transmitting a given amount of power rises many folds. Not only that, the transmission lines has their own resistances. This huge amount of current will cause tremendous amount of *power loss* or I^2r loss in the lines. This loss will simply heat the lines and becomes a *wasteful energy*. In other words, *efficiency of transmission* becomes poor and cost involved is high.

The above problems may addressed if we could transmit power at a very high voltage say, at 200 kV or 400 kV or even higher at 800 kV. But as pointed out earlier, a generator is incapable of generating voltage at these level due to its own practical limitation. The solution to this problem is to use an appropriate *step-up transformer* at the generating station to bring the transmission voltage level at the desired value as depicted in figure 23.1 where for simplicity single phase system is shown to understand the basic idea. Obviously when power reaches the load centre, one has to step down the voltage to suitable and safe values by using transformers. Thus transformers are an integral part in any modern power system. Transformers are located in places called *substations*. In cities or towns you must have noticed transformers are installed on poles – these are called *pole mounted distribution transformers*. These type of transformers change voltage level typically from 3-phase, 6 kV to 3-phase 440 V line to line.

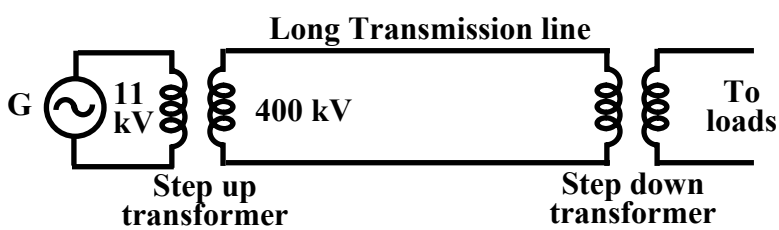

Figure 23.1: A simple single phase power system.

In this and the following lessons we shall study the basic principle of operation and performance evaluation based on equivalent circuit.

23.2.1 Principle of operation

A transformer in its simplest form will consist of a rectangular *laminated magnetic structure* on which two coils of different number of turns are wound as shown in Figure 23.2.

The winding to which a.c voltage is impressed is called the *primary* of the transformer and the winding across which the load is connected is called the *secondary* of the transformer.

23.3 Ideal Transformer

To understand the working of a transformer it is always instructive, to begin with the concept of an *ideal* transformer with the following properties.

1. Primary and secondary windings has no resistance.

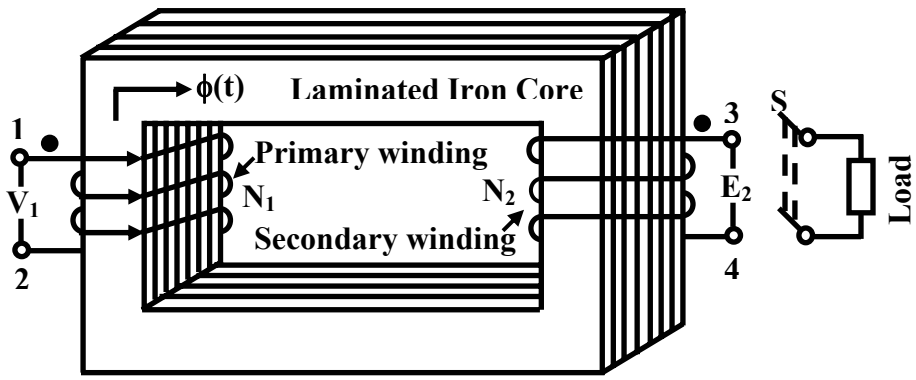

Figure 23.2: A typical transformer.

2. All the flux produced by the primary links the secondary winding i,e., there is no leakage flux.

3. Permeability μ_r of the core is infinitely large. In other words, to establish flux in the core vanishingly small (or zero) current is required.

4. Core loss comprising of *eddy current* and *hysteresis* losses are neglected.

23.3.1 Core flux gets fixed by voltage & frequency

The flux level B_{max} in the core of a given magnetic circuit gets fixed by the magnitude of the supply voltage and frequency. This important point has been discussed in the previous lecture 20. It was shown that:

$$B_{\max} = \frac{V}{\sqrt{2}\pi fAN} = \frac{1}{4.44AN}\frac{V}{f}$$

where, V is the applied voltage at frequency f, N is the number of turns of the coil and A is the cross sectional area of the core. For a given magnetic circuit A and N are constants, so B_{max} developed in core is decided by the ratio $\frac{V}{f}$. The peak value of the coil current I_{max}, drawn from the supply now gets decided by the B-H characteristics of the core material.

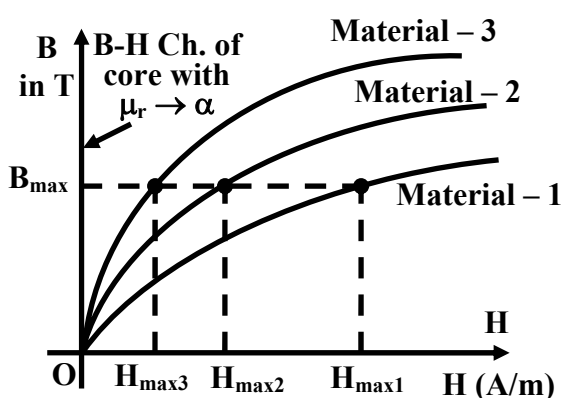

Figure 23.3: Estimating current drawn for different core materials.

To elaborate this, let us consider a magnetic circuit with N number of turns and core section area A with mean length l. Let material-3 be used to construct the core whose B-H characteristic shown in figure 23.3. Now the question is: if we apply a voltage V at frequency f, how much current will be drawn by the coil? We follow the following steps to arrive at the answer.

1. First calculate maximum flux density using $B_{\max} = \frac{1}{4.44AN}\frac{V}{f}$. Note that value of B_{max} is independent of the core material property.

2. Corresponding to this B_{max}, obtain the value of H_{max3} from the B-H characteristic of the material-3 (figure 23.3).

3. Now calculate the required value of the current using the relation $I_{\max 3} = \frac{H_{\max 3} l}{N}$.

4. The rms value of the exciting current with material-3 as the core, will be $I_3 = I_{\max 3}/\sqrt{2}$.

By following the above steps, one could also estimate the exciting currents (I_2 or I_3) drawn by the coil if the core material were replaced by material-2 or by material-3 with other things remaining same. Obviously current needed, to establish a flux of B_{max} is lowest for material-3. Finally note that if the core material is such that $\mu_r \to \infty$, the B-H characteristic of this ideal core material will be the B axis itself as shown by the thick line in figure 23.3 which means that for such an ideal core material current needed is practically zero to establish any B_{max} in the core.

23.3.2 Analysis of ideal transformer

Let us assume a sinusoidally varying voltage is impressed across the primary with secondary winding open circuited. Although the current drawn I_m will be practically zero, but its position will be 90° lagging with respect to the supply voltage. The flux produced will obviously be in phase with I_m. In other words the supply voltage will lead the flux phasor by 90°. Since flux is common for both the primary and secondary coils, it is customary to take flux phasor as the reference.

$$\text{Let, } \phi(t) = \phi_{max} \sin \omega t$$

$$\text{then, } v_1 = V_{max} \sin\left(\omega t + \frac{\pi}{2}\right) \qquad (23.1)$$

The time varying flux $\phi(t)$ will link both the primary and secondary turns inducing in voltages e_1 and e_2 respectively

$$\text{Instantaneous induced voltage in primary} = -N_1 \frac{d\phi}{dt} = \omega N_1 \phi_{max} \sin\left(\omega t - \frac{\pi}{2}\right)$$

$$= 2\pi\ f\ N_1\phi_{max} sin\left(\omega t - \frac{\pi}{2}\right) \quad (23.2)$$

Instantaneous induced voltage in secondary $= -N_2 \frac{d\phi}{dt} = \omega N_2\phi_{max} sin\left(\omega t - \frac{\pi}{2}\right)$

$$= 2\pi\ f\ N_2\phi_{max} sin\left(\omega t - \frac{\pi}{2}\right) \quad (23.3)$$

Magnitudes of the rms induced voltages will therefore be

$$E_1 = \sqrt{2}\pi\ f\ N_1\ \phi_{max} = 4.44\ f\ N_1\phi_{max} \quad (23.4)$$

$$E_2 = \sqrt{2}\pi\ f\ N_2\phi_{max} = 4.44\ f\ N_2\phi_{max} \quad (23.5)$$

The time phase relationship between the applied voltage v_1 and e_1 and e_2 will be same. The 180° phase relationship obtained in the mathematical expressions of the two merely indicates that the induced voltage opposes the applied voltage as per *Lenz's law*. In other words if e_1 were allowed to act alone it would have delivered power in a direction opposite to that of v_1. By applying Kirchoff's law in the primary one can easily say that $V_1 = E_1$ as there is no other drop existing in this ideal transformer. Thus udder no load condition,

$$\frac{V_2}{V_1} = \frac{E_2}{E_1} = \frac{N_2}{N_1}$$

Where, V_1, V_2 are the terminal voltages and E_1, E_2 are the rms induced voltages. In convention 1, phasors $\overline{E}^1$ and $\overline{E}^2$ are drawn 180° out of phase with respect to $\overline{V}^1$ in order to convey the respective power flow directions of these two are opposite. The second convention results from the fact that the quantities $v_1(t)$, $e_1(t)$ and $e_2(t)$ vary in unison, then why not show them as co-phasal and keep remember the power flow business in one's mind.

23.3.3 No load phasor diagram

A transformer is said to be under no load condition when no load is connected across the secondary i.e., the switch S in figure 23.2 is kept opened and no current is carried by the secondary windings. The phasor diagram under no load condition can be drawn starting with $\overline{\phi}$ as the reference phasor as shown in figure 23.4.

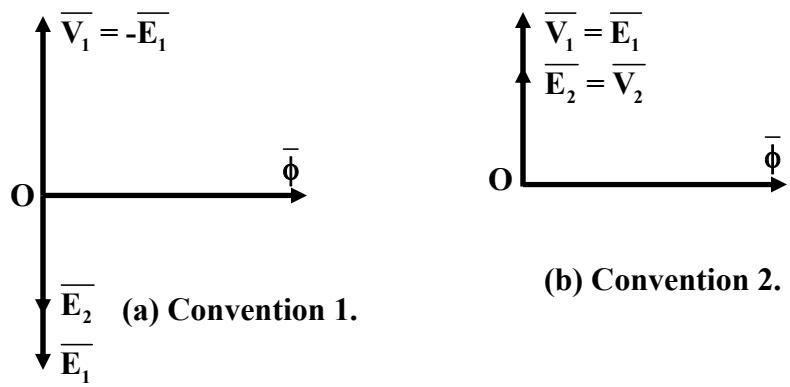

Figure 23.4: No load Phasor Diagram following two conventions.

In convention 1, phsors $\overline{E_1}$ and $\overline{E_2}$ are drawn 180° out of phase with respect to $\overline{V_1}$ in order to convey that the respective power flow directions of these two are opposite. The second convention results from the fact that the quantities $v_1(t)$, $e_1(t)$ and $e_2(t)$ vary in unison then why not show them as co-phasal and keep remember the power flow business in one's mind. Also remember vanishingly small magnetizing current is drawn from the supply creating the flux and in time phase with the flux.

23.4 Transformer under loaded condition

In this lesson we shall study the behavior of the transformer when loaded. A transformer gets loaded when we try to draw power from the secondary. In practice loading can be imposed on a transformer by connecting impedance across its secondary coil. It will be explained how the primary reacts when the secondary is loaded. It will be shown that any attempt to draw current/power from the secondary, is immediately responded by the primary winding by drawing extra current/power from the source. We shall also see that mmf balance will be maintained whenever both the windings carry currents. Together with the *mmf balance equation* and *voltage ratio* equation, invariance of Volt-Ampere (VA or KVA) irrespective of the sides will be established.

We have seen in the preceding section that the secondary winding becomes a seat of emf and ready to deliver power to a load if connected across it when primary is energized. Under no load condition power drawn is zero as current drawn is zero for ideal transformer. However when loaded, the secondary will deliver power to the load and same amount of power must be sucked in by the primary from the source in order to maintain *power balance*. We expect the primary current to flow now. Here we shall examine in somewhat detail the mechanism of drawing extra current by the primary when the secondary is loaded. For a fruitful discussion on it let us quickly review the *dot* convention in mutually coupled coils.

23.4.1 Dot convention

The primary of the transformer shown in figure 23.2 is energized from a.c source and potential of terminal 1 with respect to terminal 2 is $v_{12} = V_{max} sin\omega t$. Naturally polarity of 1 is sometimes +ve and some other time it is –ve. The *dot* convention helps us to determine the polarity of the induced voltage in the secondary coil marked with terminals 3 and 4. Suppose at some time t we find that terminal 1 is +ve and it is increasing with respect to terminal 2. At that time what should be the status of the induced voltage polarity in the secondary – whether terminal 3 is +ve or –ve? If possible let us assume terminal 3 is –ve and terminal 4 is positive. If that be current the secondary will try to deliver current to a load such that current comes out from terminal 4 and enters terminal 3. Secondary winding therefore, produces flux in the core in the same direction as that of the flux produced by the primary. So core flux gets strengthened in inducing more voltage. This is contrary to the dictate of Lenz's law which says that the polarity of the induced voltage in a coil should be such that it will try to oppose the cause for which it is due. Hence terminal 3 can not be –ve.

If terminal 3 is +ve then we find that secondary will drive current through the load leaving from terminal 3 and entering through terminal 4. Therefore flux produced by the secondary clearly opposes the primary flux fulfilling the condition set by Lenz's law. Thus when terminal 1 is +ve terminal 3 of the secondary too has to be positive. In mutually coupled coils dots are put at the appropriate terminals of the primary and secondary merely to indicative the status of polarities of the voltages. Dot terminals will have at any point of time identical polarities. In the transformer of figure 23.2 it is appropriate to put dot markings on terminal 1 of primary and terminal 3 of secondary. It is to be noted that if the *sense* of the windings are known (as in figure 23.2), then one can ascertain with confidence where to place the dot markings without doing any testing whatsoever. In practice however, only a pair of primary terminals and a pair of secondary terminals are available to the user and the sense of the winding can not be ascertained at all. In such cases the dots can be found out by doing some simple tests such as *polarity test* or *d.c kick test*.

If the transformer is loaded by closing the switch S, current will be delivered to the load from terminal 3 and back to 4. Since the secondary winding carries current it produces flux in the anti clock wise direction in the core and tries to reduce the original flux. However, KVL in the primary demands that core flux should remain constant no matter whether the transformer is loaded or not. Such a requirement can only be met if the primary draws a definite amount of extra current in order to nullify the effect of the mmf produced by the secondary. Let it be clearly understood that net mmf acting in the core is given by: mmf due to vanishingly small magnetizing current + mmf due to secondary current + mmf due to additional primary current. But the last two terms must add to zero in order to keep the flux constant and net mmf eventually be once again be due to vanishingly small magnetizing current. If I_2 is the magnitude of the secondary current and $I_2^{'}$ is the additional current drawn by the primary then following relation must hold good:

$$N_1 I'_2 = N_2 I_2$$

$$\text{or } I'_2 = \frac{N_2}{N_1} I_2$$

$$= \frac{I_2}{a}$$

$$\text{where, } a = \frac{N_1}{N_2} = \text{turns ratio} \qquad (23.6)$$

To draw the phasor diagram under load condition, let us assume the power factor angle of the load to be θ_2, lagging. Therefore the load current phasor $\overline{I_2}$, can be drawn lagging the secondary terminal voltage $\overline{E_2}$ by θ_2 as shown in the figure 23.5.

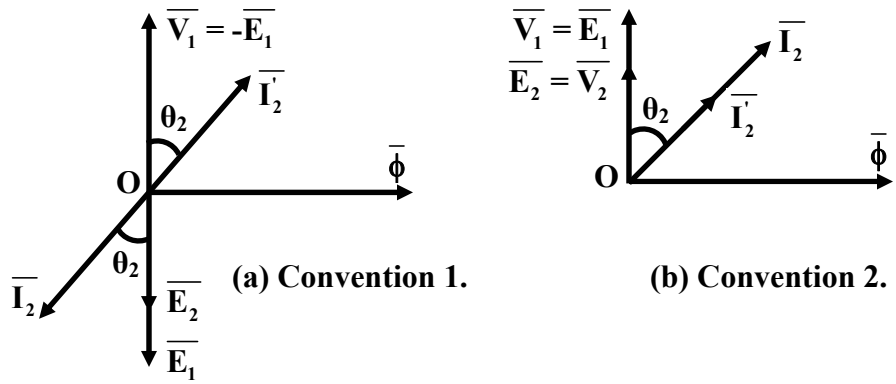

Figure 23.5: Phasor Diagram when transformer is loaded.

The reflected current magnitude can be calculated from the relation $I'_2 = \frac{I_2}{a}$ and is shown directed 180° out of phase with respect to $\overline{I_2}$ in convention 1 or in phase with $\overline{I_2}$ as per the convention 2. At this stage let it be suggested to follow one convention only and we select convention 2 for that purpose. Now,

$$\text{Volt-Ampere delivered to the load} = V_2 I_2$$

$$= E_2 I_2$$

$$= aE_1 \frac{I_1}{a}$$

$$= E_1 I_1 = V_1 I_1 = \text{Volt-Ampere drawn from the supply.}$$

Thus we note that for an ideal transformer the output VA is same as the input VA and also the power is drawn at the same power factor as that of the load.

23.4.2 Equivalent circuit of an ideal transformer

The equivalent circuit of a transformer can be drawn (i) showing both the sides along with parameters, (ii) referred to the primary side and (iii) referred to the secondary side.

In which ever way the equivalent circuit is drawn, it must represent the operation of the transformer correctly both under no load and load condition. Figure 23.6 shows the equivalent circuits of the transformer.

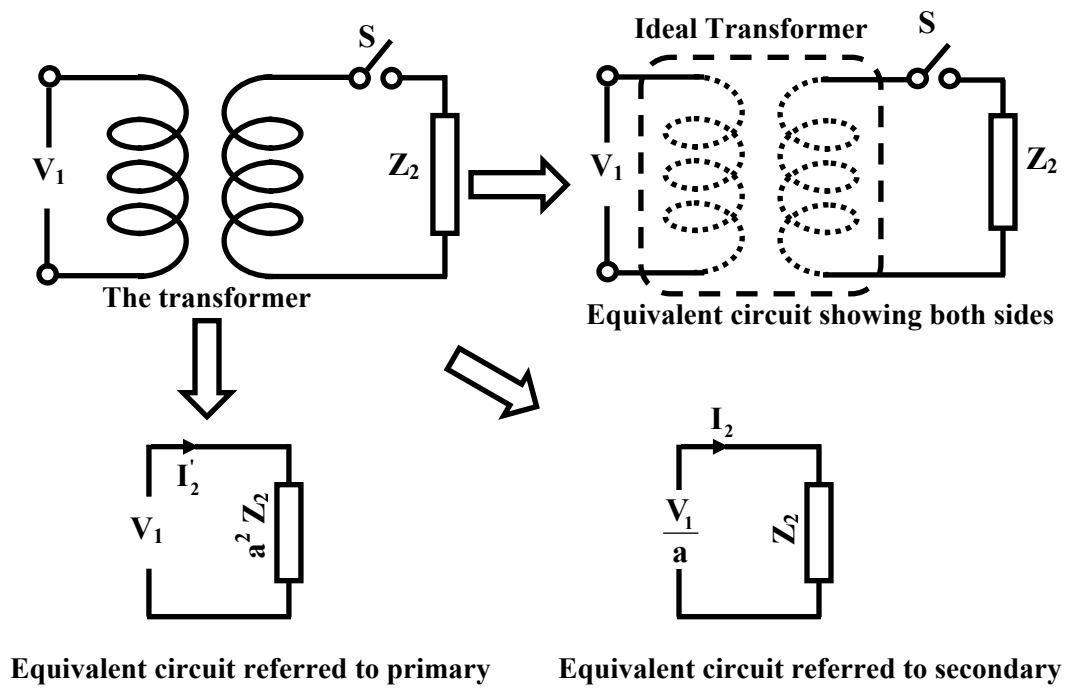

Figure 23.6: Equivalent circuits of an ideal transformer.

Think in terms of the supply. It supplies some current at some power factor when a load is connected in the secondary. If instead of the transformer, an impedance of value a^2Z_2 is connected across the supply, supply will behave identically. This corresponds to the equivalent circuit referred to the primary. Similarly from the load point of view, forgetting about the transformer, we may be interested to know what voltage source should be impressed across Z_2 such that same current is supplied to the load when the transformer was present. This corresponds to the equivalent circuit referred to the secondary of the transformer. When both the windings are shown in the equivalent circuit, they are shown with chain lines instead of continuous line. Why? This is because, when primary is energized and secondary is opened no current is drawn, however current is drawn when a load is present on the secondary side. Although supply two terminals are physically joined by the primary winding, the current drawn depends upon the load on the secondary side.

23.5 Tick the correct answer

1. An ideal transformer has two secondary coils with number of turns 100 and 150 respectively. The primary coil has 125 turns and supplied from 400 V, 50 Hz, single phase source. If the two secondary coils are connected in series, the possible voltages across the series combination will be:

(A) 833.5 V or 166.5 V (B) 833.5 V or 320 V
(C) 320 V or 800 V (D) 800 V or 166.5 V

2. A single phase, ideal transformer of voltage rating 200 V / 400 V, 50 Hz produces a flux density of 1.3 T when its LV side is energized from a 200 V, 50 Hz source. If the LV side is energized from a 180 V, 40 Hz source, the flux density in the core will become:

   (A) 0.68 T (B) 1.44 T (C) 1.62 T (D) 1.46 T

3. In the coil arrangement shown in Figure 23.7, A dot (•) marking is shown in the first coil. Where would be the corresponding dot (•) markings be placed on coils 2 and 3?

   (A) At terminal *P* of coil 2 and at terminal *R* of coil 3

   (B) At terminal *P* of coil 2 and at terminal *S* of coil 3

   (C) At terminal *Q* of coil 2 and at terminal *R* of coil 3

   (D) At terminal *Q* of coil 2 and at terminal *S* of coil 3

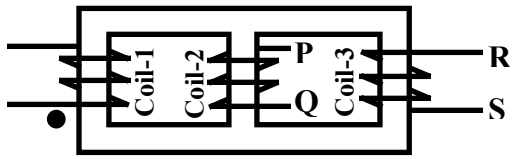

Figure 23.7:

4. A single phase ideal transformer is having a voltage rating 200 V / 100 V, 50 Hz. The HV and LV sides of the transformer are connected in two different ways with the help of voltmeters as depicted in figure 23.8 (a) and (b). If the HV side is energized with 200 V, 50 Hz source in both the cases, the readings of voltmeters V1 and V2 respectively will be:

   (A) 100 V and 300 V (B) 300 V and 100 V
   (C) 100 V or 0 V (D) 0 V or 300 V

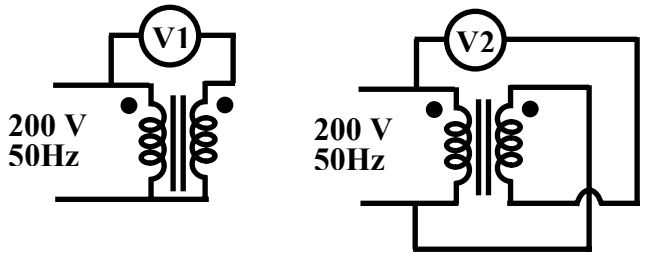

Connection (a) **Connection (b)**

Figure 23.8:

5. Across the HV side of a single phase 200 V / 400 V, 50 Hz transformer, an impedance of $32 + j24\Omega$ is connected, with LV side supplied with rated voltage & frequency. The supply current and the impedance seen by the supply are respectively:

   (A) 20 A & $128 + j96\Omega$ (B) 20 A & $8 + j6\Omega$
   (C) 5 A & $8 + j6\Omega$ (D) 20 A & $16 + j12\Omega$

6. The rating of the primary winding a transformer, having 60 number of turns, is 250 V, 50 Hz. If the core cross section area is 144 cm^2 then the flux density in the core is:

   (A) 1 T (B) 1.6 T (C) 1.4 T (D) 1.5 T

23.6 Solve the following

1. In Figure 23.9, the *ideal transformer* has turns ratio 2:1. Draw the equivalent circuits referred to primary and referred to secondary. Calculate primary and secondary currents and the input power factor and the load power factor.

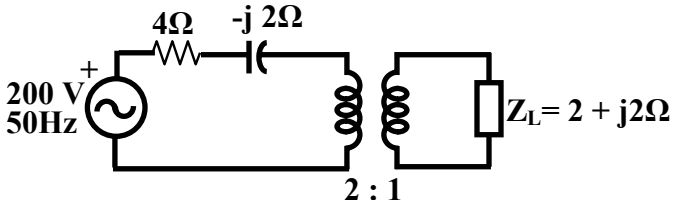

Figure 23.9: Basic scheme of protection.

2. In the Figure 23.10, a 4-winding transformer is shown along with number of turns of the windings. The first winding is energized with 200 V, 50 Hz supply. Across the 2nd winding a pure inductive reactance $X_L = 20\ \Omega$ is connected. Across the 3rd winding a pure resistance $R = 15\ \Omega$ and across the 4th winding a capacitive reactance of $X_C = 10\ \Omega$ are connected. Calculate the input current and the power factor at which it is drawn.

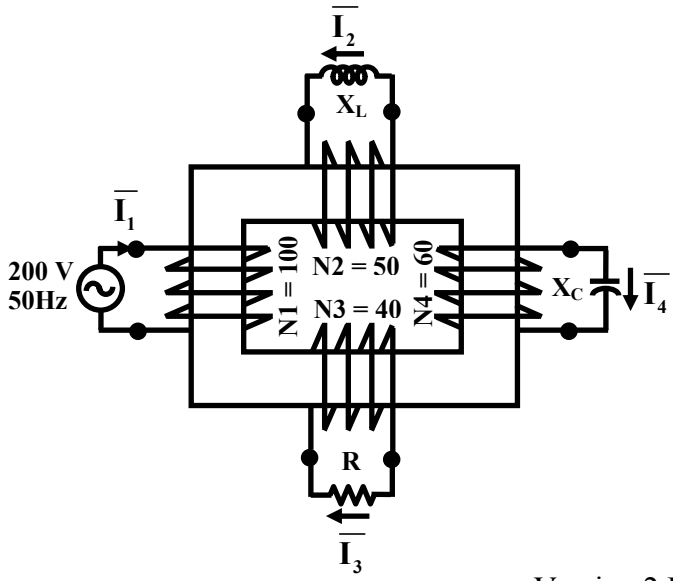

Figure 23.10:

3. In the circuit shown in Figure 23.11, T1, T2 and T3 are *ideal* transformers.

   a) Neglecting the impedance of the transmission lines, calculate the currents in primary and secondary windings of all the transformers. Reduce the circuit refer to the primary side of T1.
   b) For this part, assume the transmission line impedance in the section AB to be $\overline{Z}_{AB} = 1 + j3\Omega$. In this case calculate, what should be $\overline{V}_s$ for maintaining 450 V across the load $\overline{Z}_L = 60 + j80\Omega$. Also calculate the net impedance seen by $\overline{V}_s$.

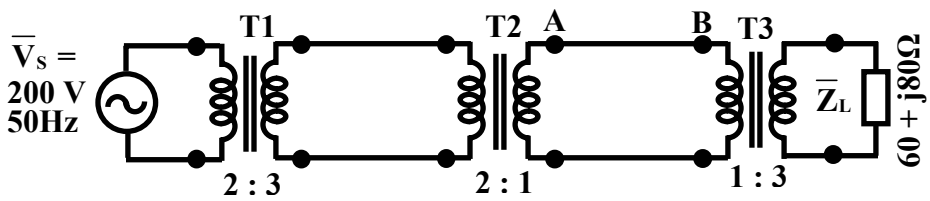

Figure 23.11:

.

Module 7

Transformer

Lesson 24

Practical Transformer

Contents

24 Practical Transformer **4**

24.1 Goals of the lesson ……. 4

24.2 Practical transformer ……. 4

24.2.1 Core loss…….. 7

24.3 Taking core loss into account …… 7

24.4 Taking winding resistances and leakage flux into account …….. 8

24.5 A few words about equivalent circuit ……... 10

24.6 Tick the correct answer ……. 11

24.7 Solve the problems …… 12

24.1 Goals of the lesson

In practice no transformer is ideal. In this lesson we shall add realities into an ideal transformer for correct representation of a practical transformer. In a practical transformer, core material will have (i) finite value of μ_r , (ii) winding resistances, (iii) leakage fluxes and (iv) core loss. One of the major goals of this lesson is to explain how the effects of these can be taken into account to represent a practical transformer. It will be shown that a practical transformer can be considered to be an ideal transformer plus some appropriate resistances and reactances connected to it to take into account the effects of items (i) to (iv) listed above.

Next goal of course will be to obtain exact and approximate equivalent circuit along with phasor diagram.

Key words : leakage reactances, magnetizing reactance, no load current.

After going through this section students will be able to answer the following questions.

- How does the effect of magnetizing current is taken into account?
- How does the effect of core loss is taken into account?
- How does the effect of leakage fluxes are taken into account?
- How does the effect of winding resistances are taken into account?
- Comment the variation of core loss from no load to full load condition.
- Draw the exact and approximate equivalent circuits referred to primary side.
- Draw the exact and approximate equivalent circuits referred to secondary side.
- Draw the complete phasor diagram of the transformer showing flux, primary & secondary induced voltages, primary & secondary terminal voltages and primary & secondary currents.

24.2 Practical transformer

A practical transformer will differ from an ideal transformer in many ways. For example the core material will have finite permeability, there will be eddy current and hysteresis losses taking place in the core, there will be leakage fluxes, and finite winding resistances. We shall gradually bring the realities one by one and modify the ideal transformer to represent those factors.

Consider a transformer which requires a finite magnetizing current for establishing flux in the core. In that case, the transformer will draw this current I_m even under no load condition. The level of flux in the core is decided by the voltage, frequency and number of turns of the primary and does not depend upon the nature of the core material used which is apparent from the following equation:

$$\phi_{\max} = \frac{V_1}{\sqrt{2}\pi f N_1}$$

Hence maximum value of flux density B_{max} is known from $B_{max} = \frac{\phi_{\max}}{A_i}$, where A_i is the net cross sectional area of the core. Now H_{max} is obtained from the B – H curve of the material. But we know $H_{max} = \frac{N_1 I_{m\max}}{l_i}$, where I_{mmax} is the maximum value of the magnetizing current. So rms value of the magnetizing current will be $I_{\mathrm{m}} = \frac{I_{m\max}}{\sqrt{2}}$. Thus we find that the amount of magnetizing current drawn will be different for different core material although applied voltage, frequency and number of turns are same. Under no load condition the required amount of flux will be produced by the mmf $N_1 I_m$. In fact this amount of mmf must exist in the core of the transformer all the time, independent of the degree of loading.

Whenever secondary delivers a current I_2, The primary has to reacts by drawing extra current I'_2 (called reflected current) such that $I'_2 N_1 = I_2 N_2$ and is to be satisfied at every instant. Which means that if at any instant i_2 is leaving the dot terminal of secondary, i'_2 will be drawn from the dot terminal of the primary. It can be easily shown that under this condition, these two mmfs (i.e, $N_2 i_2$ and $i'_2 N_1$) will act in opposition as shown in figure 24.1. If these two mmfs also happen to be numerically equal, there can not be any flux produced in the core, due to the effect of actual secondary current I_2 and the corresponding reflected current I'_2

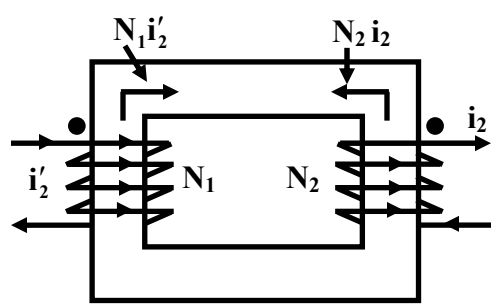

Figure 24.1: MMf directions by I_2 and I'_2

The net mmf therefore, acting in the magnetic circuit is once again $I_m N_1$ as mmfs $I'_2 N_1$ and $I_2 N_2$ cancel each other. All these happens, because KVL is to be satisfied in the primary demanding ϕ_{max} to remain same, no matter what is the status (i., open circuited or loaded) of the secondary. To create ϕ_{max}, mmf necessary is $N_1 I_m$. Thus, net mmf provided by the two coils together must always be $N_1 I_{\mathrm{m}}$ – under no load as under load condition. Better core material is used to make I_m smaller in a well designed transformer.

Keeping the above facts in mind, we are now in a position to draw phasor diagram of the transformer and also to suggest modification necessary to an ideal transformer to take magnetizing current $\overline{I}_m$ into account. Consider first, the no load operation. We first draw the $\overline{\phi}_{\max}$ phasor. Since the core is not ideal, a finite magnetizing current $\overline{I}_m$ will be drawn from supply and it will be in phase with the flux phasor as shown in figure 24.2(a). The induced voltages in primary $\overline{E}_1$ and secondary $\overline{E}_2$ are drawn 90º ahead (as explained earlier following convention 2). Since winding resistances and the leakage flux are still neglected, terminal voltages $\overline{V}_1$ and $\overline{V}_2$ will be same as $\overline{E}_1$ and $\overline{E}_2$ respectively.

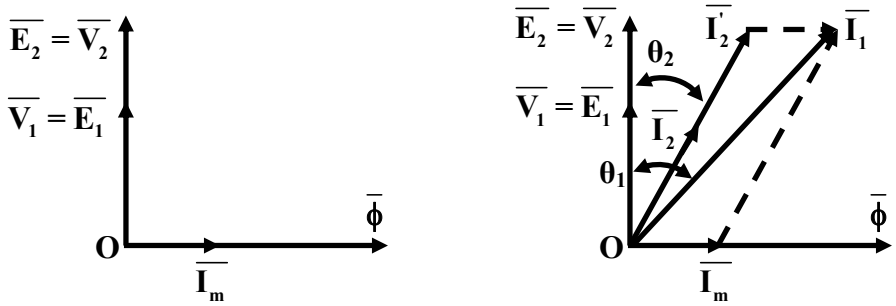

(a) No load condition **(b) Loaded condition**

Figure 24.2: Phasor Diagram with magnetising current taken into account.

If you compare this no load phasor diagram with the no load phasor diagram of the ideal transformer, the only difference is the absence of $\overline{I}_m$ in the ideal transformer. Noting that $\overline{I}_m$ lags $\overline{V}_1$ by 90º and the magnetizing current has to supplied for all loading conditions, common sense prompts us to connect a reactance X_m, called the magnetizing reactance across the primary of an ideal transformer as shown in figure 24.3(a). Thus the transformer having a finite magnetizing current can be modeled or represented by an ideal transformer with a fixed magnetizing reactance X_m connected across the primary. With S opened in figure 24.3(a), the current drawn from the supply is $\overline{I}_1 = \overline{I}_m$ since there is no reflected current in the primary of the ideal transformer. However, with S closed there will be $\overline{I}_2$, hence reflected current $\overline{I}'_2 = \overline{I}_2 / a$ will appear in the primary of the ideal transformer. So current drawn from the supply will be $\overline{I}_1 = \overline{I}_m + \overline{I}'_2$.

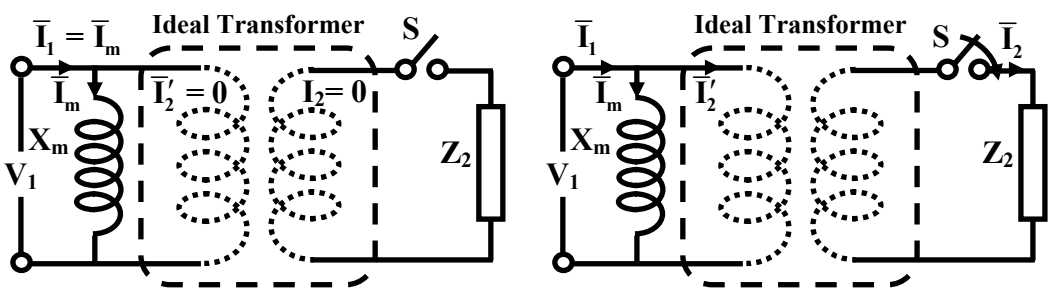

(a) with secondary opened **(a) with load in secondary**

Figure 24.3: Magnetising reactance to take I_m into account.

This model figure 24.3 correctly represents the phasor diagram of figure 24.2. As can be seen from the phasor diagram, the input power factor angle θ_1 will differ from the load power factor θ_2 in fact power factor will be slightly poorer (since $\theta_2 > \theta_1$).

Since we already know how to draw the equivalent circuit of an ideal transformer, so same rules of transferring impedances, voltages and currents from one side to the other side can be revoked here because a portion of the model has an ideal transformer. The equivalent circuits of the transformer having finite magnetizing current referring to primary and secondary side are shown respectively in figures 24.4(a) and (b).

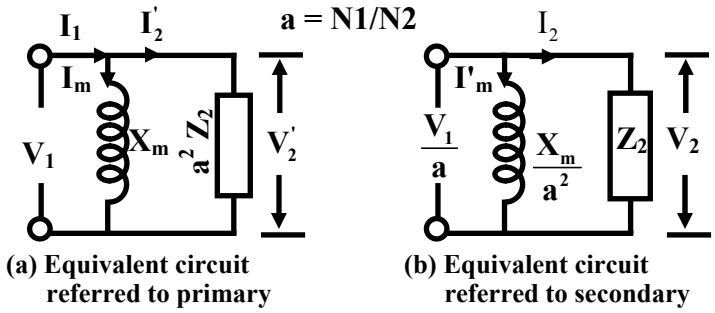

Figure 24.4: Equivalent circuits with X_m

24.2.1 Core loss

A transformer core is subjected to an alternating *time varying field* causing eddy current and hysteresis losses to occur inside the core of the transformer. The sum of these two losses is known as *core loss* of the transformer. A detail discussion on these two losses has been given in Lesson 22.

Eddy current loss is essentially I^2 R loss occurring inside the core. The current is caused by the induced voltage in any conceivable closed path due to time varying field. Obviously to reduce eddy current loss in a material we have to use very thin plates instead of using solid block of material which will ensure very less number of available eddy paths. Eddy current loss per unit volume of the material directly depends upon the *square* of the *frequency, flux density and thickness* of the plate. Also it is inversely proportional to the *resistivity* of the material. The core of the material is constructed using thin plates called lamination. Each plate is given a varnish coating for providing necessary insulation between the plates. *Cold Rolled Grain Oriented*, in short CRGO sheets are used to make transformer core.

After experimenting with several magnetic materials, Steinmetz proposed the following empirical formula for quick and reasonable estimation of the hysteresis loss of a given material.

$$P_h = k_h B_{\max}^n f$$

The value of n will generally lie between 1.5 to 2.5. Also we know the area enclosed by the hysteresis loop involving B-H characteristic of the core material is a measure of hysteresis loss per cycle.

24.3 Taking core loss into account

The transformer core being subjected to an alternating field at supply frequency will have hysteresis and eddy losses and should be appropriately taken into account in the equivalent circuit. The effect of core loss is manifested by heating of the core and is a real power (or energy) loss. Naturally in the model an external resistance should be shown to take the core loss into account. We recall that in a well designed transformer, the flux density level B_{max} practically remains same from no load to full load condition. Hence magnitude of the core loss will be practically independent of the degree of loading and this loss must be drawn from the supply. To take this into account, a fixed resistance R_{cl} is shown connected in parallel with the magnetizing reactance as shown in the figure 24.5.

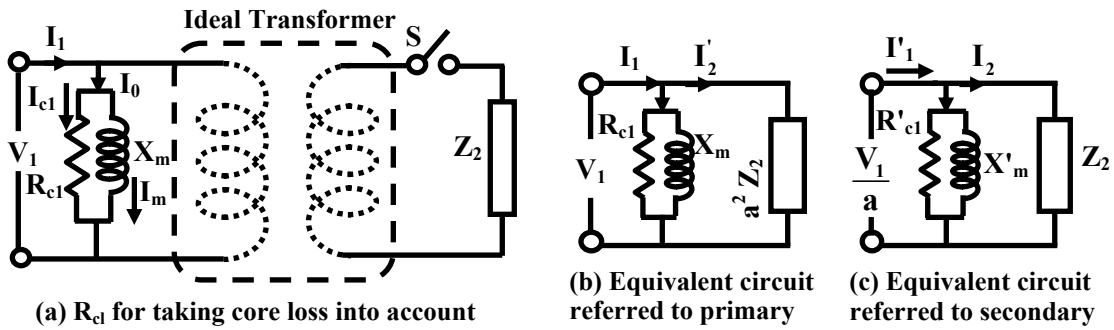

(a) R_{cl} for taking core loss into account

(b) Equivalent circuit referred to primary

(c) Equivalent circuit referred to secondary

Figure 24.5: Equivalent circuit showing core loss and magnetizing current.

It is to be noted that R_{cl} represents the core loss (i.e., sum of hysteresis and eddy losses) and is in parallel with the magnetizing reactance X_m. Thus the no load current drawn from the supply I_o, is not magnetizing current I_m alone, but the sum of I_{cl} and I_m with $\overline{I}_{cl}$ in phase with supply voltage $\overline{V}_1$ and $\overline{I}_m$ lagging by 90º from $\overline{V}_1$. The phasor diagrams for no load and load operations are shown in figures 24.6 (a) and (b).

It may be noted, that no load current I_o is about 2 to 5% of the rated current of a well designed transformer. The reflected current $\overline{I}'_2$ is obviously now to be added vectorially with $\overline{I}_o$ to get the total primary current $\overline{I}_1$ as shown in figure 24.6 (b).

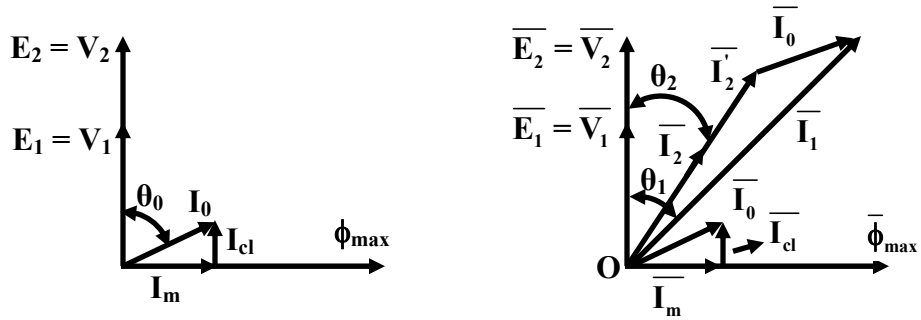

(a) phasor diagram: no load

(b) phasor diagram: with load power factor angle θ_2

Figure 24.6: Phasor Diagram of a transformer having core loss and magnetising current.

24.4 Taking winding resistances and leakage flux into account

The assumption that all the flux produced by the primary links the secondary is far from true. In fact a small portion of the flux only links primary and completes its path mostly through air as shown in the figure 24.7. The total flux produced by the primary is the sum of the mutual and the leakage fluxes. While the mutual flux alone takes part in the energy transfer from the primary to the secondary, the effect of the leakage flux causes additional voltage drop. This drop can be represented by a small reactance drop called the leakage reactance drop. The effect of winding resistances are taken into account by way of small lumped resistances as shown in the figure 24.8.

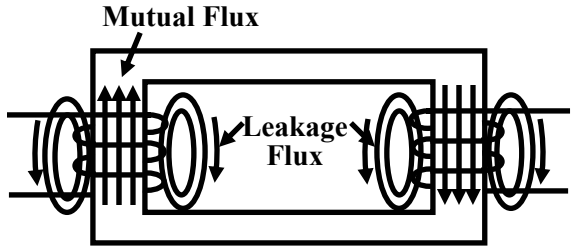

Figure 24.7: Leakage flux and their paths.

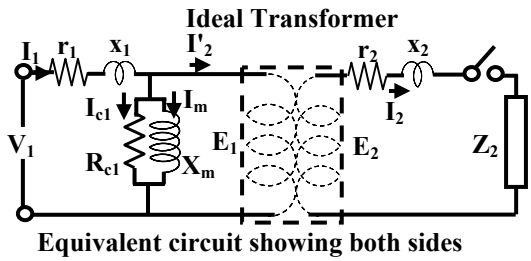

Figure 24.8: Equivalent circuit of a practical transformer.

The *exact* equivalent circuit can now be drawn with respective to various sides taking all the realities into account. Resistance and leakage reactance drops will be present on both the sides and represented as shown in the figures 24.8 and 24.9. The drops in the leakage impedances will make the terminal voltages different from the induced voltages.

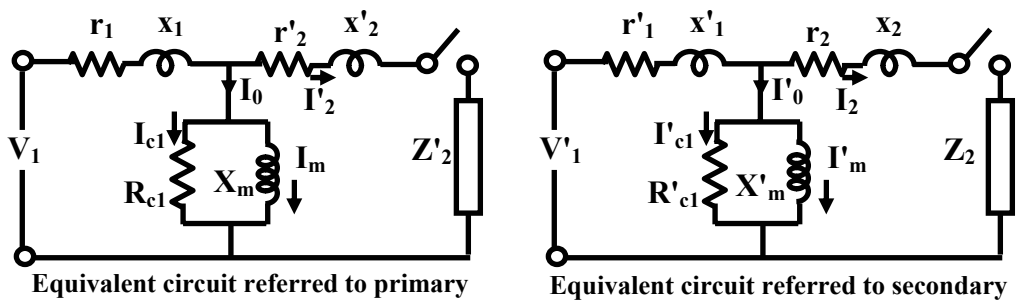

Figure 24.9: Exact Equivalent circuit referred to primary and secondary sides.

It should be noted that the parallel impedance representing core loss and the magnetizing current is much higher than the series leakage impedance of both the sides. Also the no load current I_0 is only about 3 to 5% of the rated current. While the use of exact equivalent circuit will give us exact modeling of the practical transformer, but it suffers from computational burden. The basic voltage equations in the primary and in the secondary based on the exact equivalent circuit looks like:

$$\overline{V_1} = \overline{E_1} + \overline{I_1}\, r_1 + j\overline{I_1}\, x_1$$
$$\overline{V_2} = \overline{E_2} - \overline{I_2}\, r_2 - j\overline{I_2}\, x_2$$

It is seen that if the parallel branch of R_{cl} and X_m are brought forward just right across the supply, computationally it becomes much more easier to predict the performance of the transformer sacrificing of course a little bit of accuracy which hardly matters to an engineer. It is this *approximate equivalent circuit* which is widely used to analyse a practical power/distribution transformer and such an equivalent circuit is shown in the figure 24.11.

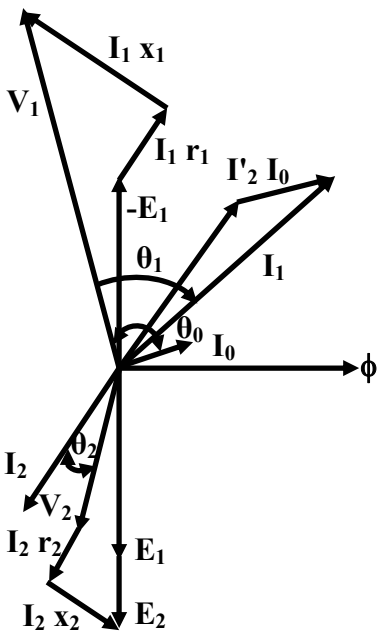

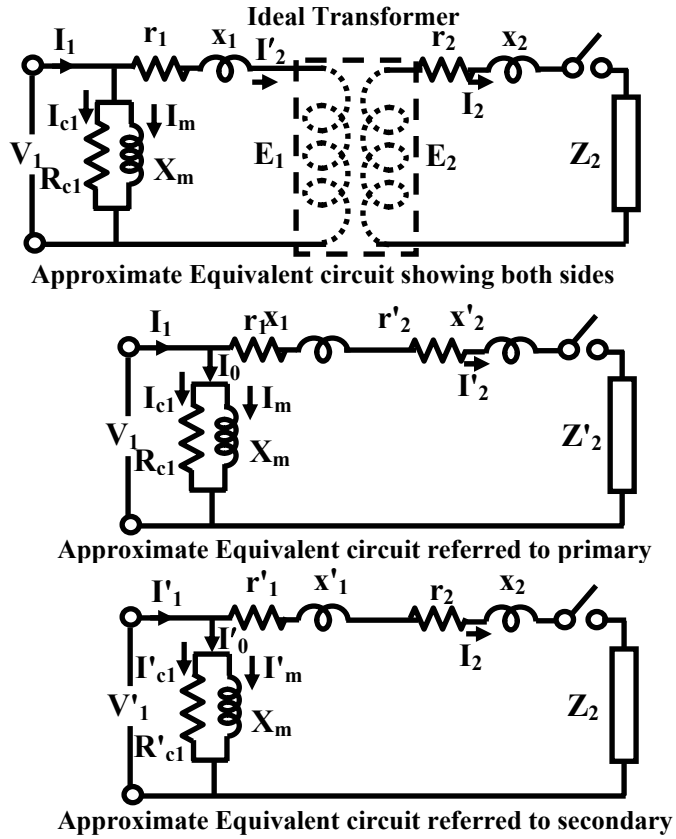

Figure 24.10: Phasor diagram of the transformer supplying lagging power factor load.

Figure 24.11: Approximate equivalent circuit.

The exact phasor diagram of the transformer can now be drawn by drawing the flux phasor first and then applying the KVL equations in the primary and in the secondary.

The phasor diagram of the transformer when it supplies a lagging power factor load is shown in the figure 24.10. It is clearly seen that the difference in the terminal and the induced voltage of both the sides are nothing but the leakage impedance drops of the respective sides. Also note that in the approximate equivalent circuit, the leakage impedance of a particular side is in series with the reflected leakage impedance of the other side. The sum of these leakage impedances are called *equivalent leakage impedance referred* to a particular side.

Equivalent leakage impedance referred to primary $r_{e1} + jx_{e1} = \left(r_1 + a^2 r_2\right) + j\left(x_1 + a^2 x_2\right)$

Equivalent leakage impedance referred to secondary $r_{e2} + jx_{e2} = \left(r_2 + \frac{r_1}{a^2}\right) + j\left(x_2 + \frac{x_1}{a^2}\right)$

Where, a = $\frac{N_1}{N_2}$ the turns ratio.

24.5 A few words about equivalent circuit

Approximate equivalent circuit is widely used to predict the performance of a transformer such as estimating regulation and efficiency. Instead of using the equivalent circuit showing both the

sides, it is always advantageous to use the equivalent circuit referred to a particular side and analyse it. Actual quantities of current and voltage of the other side then can be calculated by multiplying or dividing as the case may be with appropriate factors involving turns ratio a.

Transfer of parameters (impedances) and quantities (voltages and currents) from one side to the other should be done carefully. Suppose a transformer has turns ratio a, $a = N_1/N_2 = V_1/V_2$ where, N_1 and N_2 are respectively the primary and secondary turns and V_1 and V_2 are respectively the primary and secondary rated voltages. The rules for transferring parameters and quantities are summarized below.

1. **Transferring impedances from secondary to the primary:**
   If actual impedance on the secondary side be $\bar{Z}_2$, referred to primary side it will become $\bar{Z}_2' = a^2 \bar{Z}_2$.

2. **Transferring impedances from primary to the secondary:**
   If actual impedance on the primary side be $\bar{Z}_1$, referred to secondary side it will become $\bar{Z}_1' = \bar{Z}_1 / a^2$.

3. **Transferring voltage from secondary to the primary:**
   If actual voltage on the secondary side be $\bar{V}_2$, referred to primary side it will become $\bar{V}_2' = a\bar{V}_2$.

4. **Transferring voltage from primary to the secondary:**
   If actual voltage on the primary side be $\bar{V}_1$, referred to secondary side it will become $\bar{V}_1' = \bar{V}_1 / a$.

5. **Transferring current from secondary to the primary:**
   If actual current on the secondary side be $\bar{I}_2$, referred to primary side it will become $\bar{I}_2' = \bar{I}_2 / a$.

6. **Transferring current from primary to the secondary:**
   If actual current on the primary side be $\bar{I}_1$, referred to secondary side it will become $\bar{I}_1' = a\bar{I}_1$.

In spite of all these, gross mistakes in calculating the transferred values can be identified by remembering the following facts.

1. A current referred to LV side, will be higher compared to its value referred to HV side.
2. A voltage referred to LV side, will be lower compared to its value referred to HV side.
3. An impedance referred to LV side, will be lower compared to its value referred to HV side.

24.6 Tick the correct answer

1. If the applied voltage of a transformer is increased by 50%, while the frequency is reduced to 50%, the core flux density will become

   [A] 3 times [B] $\frac{3}{4}$ times [C] $\frac{1}{3}$ [D] same

2. For a 10 kVA, 220 V / 110 V, 50 Hz single phase transformer, a good guess value of no load current from LV side is:

   (A) about 1 A (B) about 8 A (C) about 10 A (D) about 4.5 A

3. For a 10 kVA, 220 V / 110 V, 50 Hz single phase transformer, a good guess value of no load current from HV side is:

   (A) about 2.25 A (B) about 4 A (C) about 0.5 A (D) about 5 A

4. The consistent values of equivalent leakage impedance of a transformer, referred to HV and referred to LV side are respectively:

   (A) $0.4 + j0.6\Omega$ and $0.016 + j0.024\Omega$
   (B) $0.2 + j0.3\Omega$ and $0.008 + j0.03\Omega$
   (C) $0.016 + j0.024\Omega$ and $0.4 + j0.6\Omega$
   (D) $0.008 + j0.3\Omega$ and $0.016 + j0.024\Omega$

5. A 200 V / 100 V, 50 Hz transformer has magnetizing reactance $X_m = 400\Omega$ and resistance representing core loss $R_{cl} = 250\Omega$ both values referring to HV side. The value of the no load current and no load power factor referred to HV side are respectively:

   (A) 2.41 A and 0,8 lag (B) 1.79 A and 0.45 lag
   (C) 3.26 A and 0.2 lag (D) 4.50 A and 0.01 lag

6. The no load current drawn by a single phase transformer is found to be $i_0 = 2 \cos \omega t$ A when supplied from 440 cos ωt Volts. The magnetizing reactance and the resistance representing core loss are respectively:

   (A) 216.65 Ω and 38.2 Ω (B) 223.57 Ω and 1264 Ω
   (C) 112 Ω and 647 Ω (D) 417.3 Ω and 76.4 Ω

24.7 Solve the problems

1. A 5 kVA, 200 V / 100 V, 50Hz single phase transformer has the following parameters:

HV winding Resistance	=	0.025 Ω
HV winding leakage reactance	=	0.25 Ω
LV winding Resistance	=	0.005 Ω
LV winding leakage reactance	=	0.05 Ω
Resistance representing core loss in HV side	=	400 Ω
Magnetizing reactance in HV side	=	190 Ω

Draw the equivalent circuit referred to [i] LV side and [ii] HV side and insert all the parameter values.

2. A 10 kVA, 1000 V / 200 V, 50 Hz, single phase transformer has HV and LV side winding resistances as 1.1 Ω and 0.05 Ω respectively. The leakage reactances of HV and LV sides are respectively 5.2 Ω and 0.15 Ω respectively. Calculate [i] the voltage to be applied to the HV side in order to circulate rated current with LV side shorted, [ii] Also calculate the power factor under this condition.

3. Draw the complete phasor diagrams of a single phase transformer when [i] the load in the secondary is purely resistive and [ii] secondary load power factor is *leading.*

Module 7

Transformer

Lesson 25

Testing, Efficiency & Regulation

Version 2 EE IIT, Kharagpur

Contents

25 Testing, Efficiency & regulation **4**

25.1 Goals of the lesson …….. 4

25.2 Determination of equivalent circuit parameters …… 4

25.2.1 Qualifying parameters with suffixes LV & HV……. 5

25.2.2 Open Circuit Test……... 5

25.2.3 Short circuit test ……. 6

25.3 Efficiency of transformer…….. 8

25.3.1 All day efficiency……... 10

25.4 Regulation……. 11

25.5 Tick the correct answer……. 14

25.6 Solves the Problems ……. 15

25.1 Goals of the lesson

In the previous lesson we have seen how to draw equivalent circuit showing magnetizing reactance (X_m), resistance (R_{cl}), representing core loss, equivalent winding resistance (r_e) and equivalent leakage reactance (x_e). The equivalent circuit will be of little help to us unless we know the parameter values. In this lesson we first describe two basic simple laboratory tests namely (i) open circuit test and (ii) short circuit test from which the values of the equivalent circuit parameters can be computed. Once the equivalent circuit is completely known, we can predict the performance of the transformer at various loadings. *Efficiency* and *regulation* are two important quantities which are next defined and expressions for them derived and importance highlighted. A number of objective type questions and problems are given at the end of the lesson which when solved will make the understanding of the lesson clearer.

Key Words: O.C. test, S.C test, efficiency, regulation.

After going through this section students will be able to answer the following questions.

- Which parameters are obtained from O.C test?
- Which parameters are obtained from S.C test?
- What percentage of rated voltage is needed to be applied to carry out O.C test?
- What percentage of rated voltage is needed to be applied to carry out S.C test?
- From which side of a large transformer, would you like to carry out O.C test?
- From which side of a large transformer, would you like to carry out S.C test?
- How to calculate efficiency of the transformer at a given load and power factor?
- Under what condition does the transformer operate at maximum efficiency?
- What is regulation and its importance?
- How to estimate regulation at a given load and power factor?
- What is the difference between *efficiency* and *all day efficiency*?

25.2 Determination of equivalent circuit parameters

After developing the equivalent circuit representation, it is natural to ask, how to know equivalent circuit the parameter values. Theoretically from the detailed design data it is possible to estimate various parameters shown in the equivalent circuit. In practice, two basic tests namely the *open circuit test* and the *short circuit test* are performed to determine the equivalent circuit parameters.

25.2.1 Qualifying parameters with suffixes LV & HV

For a given transformer of rating say, 10 kVA, 200 V / 100 V, 50 Hz, one should not be under the impression that 200 V (HV) side will always be the primary (as because this value appears

first in order in the voltage specification) and 100 V (LV) side will always be secondary. Thus, for a given transformer either of the HV and LV sides may be used as primary or secondary as decided by the user to suit his/her goals in practice. Usually suffixes 1 and 2 are used for expressing quantities in terms of primary and secondary respectively – there is nothing wrong in it so long one keeps track clearly which side is being used as primary. However, there are situation, such as carrying out O.C & S.C tests (discussed in the next section), where naming parameters with suffixes HV and LV become imperative to avoid mix up or confusion. Thus, it will be useful to qualify the parameter values using the suffixes HV and LV (such as $r_{e\,HV}$, $r_{e\,LV}$ etc. instead of r_{e1}, r_{e2}). Therefore, it is recommended to use suffixes as LV, HV instead of 1 and 2 while describing quantities (like voltage V_{HV}, V_{LV} and currents I_{HV}, I_{LV}) or parameters (resistances r_{HV}, r_{LV} and reactances x_{HV}, x_{LV}) in such cases.

25.2.2 Open Circuit Test

To carry out open circuit test it is the LV side of the transformer where rated voltage at rated frequency is applied and HV side is left opened as shown in the circuit diagram 25.1. The voltmeter, ammeter and the wattmeter readings are taken and suppose they are V_0, I_0 and W_0 respectively. During this test, rated flux is produced in the core and the current drawn is the no-load current which is quite small about 2 to 5% of the rated current. Therefore low range ammeter and wattmeter current coil should be selected. Strictly speaking the wattmeter will record the core loss as well as the LV winding copper loss. But the winding copper loss is very small compared to the core loss as the flux in the core is rated. In fact this approximation is built-in in the approximate equivalent circuit of the transformer referred to primary side which is LV side in this case.

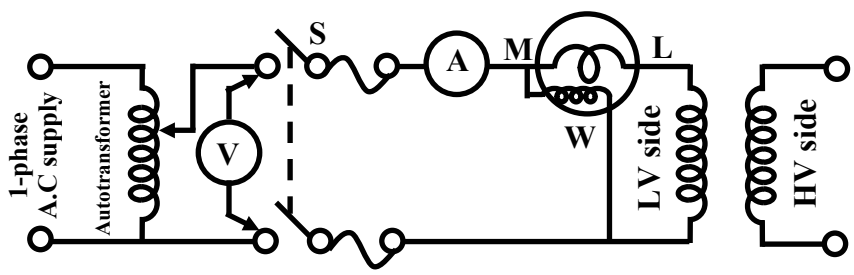

Open Circuit Test

Figure 25.1: Circuit diagram for O.C test

The approximate equivalent circuit and the corresponding phasor diagrams are shown in figures 25.2 (a) and (b) under no load condition.

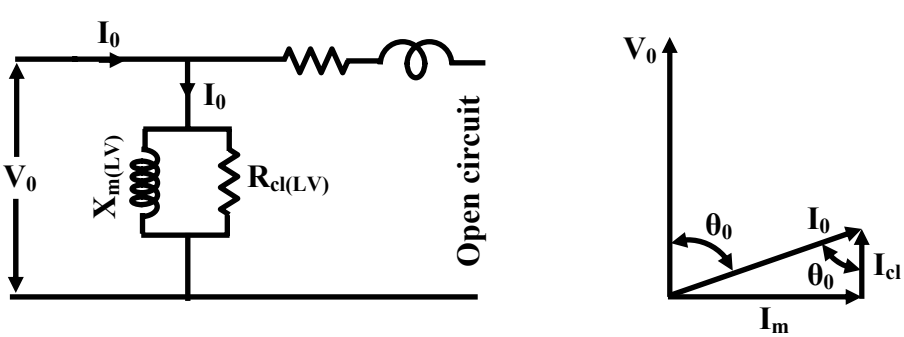

(a) Equivalent circuit under O.C test **(b) Corresponding phasor diagram**

Figure 25.2: Equivalent circuit & phasor diagram during O.C test

Below we shall show how from the readings of the meters the parallel branch impedance namely $R_{cl(LV)}$ and $X_{m(LV)}$ can be calculated.

$$\text{Calculate no load power factor } \cos\theta_0 = \frac{W_0}{V_0 I_0}$$

Hence θ_0 is known, calculate $\sin\theta_0$

$$\text{Calculate magnetizing current } I_m = I_0 \sin\theta_0$$

$$\text{Calculate core loss component of current } I_{cl} = I_0 \cos\theta_0$$

$$\text{Magnetising branch reactance } X_{m(LV)} = \frac{V_0}{I_m}$$

$$\text{Resistance representing core loss } R_{cl(LV)} = \frac{V_0}{I_{cl}}$$

We can also calculate $X_{m(HV)}$ and $R_{cl(HV)}$ as follows:

$$X_{m(HV)} = \frac{X_{m(LV)}}{a^2}$$

$$R_{cl(HV)} = \frac{R_{cl(LV)}}{a^2}$$

$$\text{Where, } a = \frac{N_{LV}}{N_{HV}} \text{ the turns ratio}$$

If we want to draw the equivalent circuit referred to LV side then $R_{cl(LV)}$ and $X_{m(LV)}$ are to be used. On the other hand if we are interested for the equivalent circuit referred to HV side, $R_{cl(HV)}$ and $X_{m(HV)}$ are to be used.

25.2.3 Short circuit test

Short circuit test is generally carried out by energizing the HV side with LV side shorted. Voltage applied is such that the *rated* current flows in the windings. The circuit diagram is shown in the figure 25.3. Here also voltmeter, ammeter and the wattmeter readings are noted corresponding to the rated current of the windings.

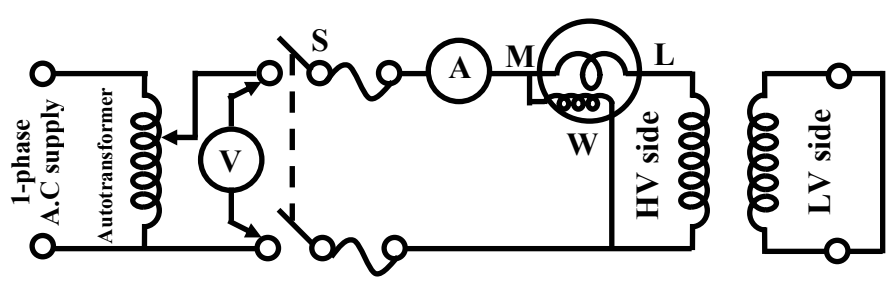

Short Circuit Test

Figure 25.3: Circuit diagram during S.C test

Suppose the readings are V_{sc}, I_{sc} and W_{sc}. It should be noted that voltage required to be applied for rated short circuit current is quite small (typically about 5%). Therefore flux level in

the core of the transformer will be also very small. Hence core loss is negligibly small compared to the winding copper losses as rated current now flows in the windings. Magnetizing current too, will be pretty small. In other words, under the condition of the experiment, the parallel branch impedance comprising of $R_{cl(HV)}$ and $X_{m(LV)}$ can be considered to be absent. The equivalent circuit and the corresponding phasor diagram during circuit test are shown in figures 25.4 (a) and (b).

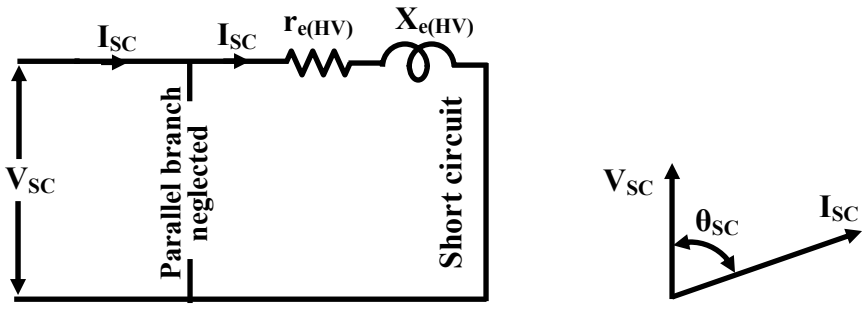

(a) Equivalent circuit under S.C test **(b) Corresponding phasor diagram**

Figure 25.4: Equivalent circuit & phasor diagram during S.C test

Therefore from the test data series equivalent impedance namely $r_{e(HV)}$ and $x_{e(HV)}$ can easily be computed as follows:

$$\text{Equivalent resistance ref. to HV side } r_{e(HV)} = \frac{W_{sc}}{I_{sc}^2}$$

$$\text{Equivalent impedance ref. to HV side } z_{e(HV)} = \frac{V_{sc}}{I_{sc}}$$

$$\text{Equivalent leakage reactance ref. to HV side } x_{e(HV)} = \sqrt{z_{e(HV)}^2 - r_{e(HV)}^2}$$

We can also calculate $r_{e(LV)}$ and $x_{e(LV)}$ as follows:

$$r_{e(LV)} = a^2 r_{e(HV)}$$

$$x_{e(LV)} = a^2 x_{e(HV)}$$

$$\text{where, } a = \frac{N_{LV}}{N_{HV}} \text{ the turns ratio}$$

Once again, remember if you are drawing equivalent circuit referred to LV side, use parameter values with suffixes LV, while for equivalent circuit referred to HV side parameter values with suffixes HV must be used.

25.3 Efficiency of transformer

In a practical transformer we have seen mainly two types of major losses namely core and copper losses occur. These losses are wasted as heat and temperature of the transformer rises. Therefore output power of the transformer will be always less than the input power drawn by the primary from the source and efficiency is defined as

$$\eta = \frac{\text{Output power in KW}}{\text{Output power in Kw} + \text{Losses}}$$

$$= \frac{\text{Output power in KW}}{\text{Output power in Kw} + \text{Core loss} + \text{Copper loss}} \qquad (25.1)$$

We have seen that from no load to the full load condition the core loss, P_{core} remains practically constant since the level of flux remains practically same. On the other hand we know that the winding currents depend upon the degree of loading and copper loss directly depends upon the square of the current and not a constant from no load to full load condition. We shall write a general expression for efficiency for the transformer operating at x per unit loading and delivering power to a known power factor load. Let,

KVA rating of the transformer be = S

Per unit degree of loading be = x

Transformer is delivering = $x\,S$ KVA

Power factor of the load be = $\cos\theta$

Output power in KW = $xS\cos\theta$

Let copper loss at full load (i.e., x = 1) = P_{cu}

Therefore copper loss at x per unit loading = $x^2 P_{cu}$

Constant core loss = P_{core} (25.2)

(25.3)

Therefore efficiency of the transformer for general loading will become:

$$\eta = \frac{xS\cos\theta}{xS\cos\theta + P_{core} + x^2 P_{cu}}$$

If the power factor of the load (i.e., cos θ) is kept constant and degree of loading of the transformer is varied we get the *efficiency* Vs *degree of loading* curve as shown in the figure 25.5. For a given load power factor, transformer can operate at maximum efficiency at some unique value of loading i.e., x. To find out the condition for *maximum efficiency*, the above equation for η can be differentiated with respect to x and the result is set to 0. Alternatively, the right hand side of the above equation can be simplified to, by dividing the numerator and the denominator by x. the expression for η then becomes:

$$\eta = \frac{S\cos\theta}{S\cos\theta + \frac{P_{core}}{x} + x\,P_{cu}}$$

For efficiency to be maximum, $\frac{d}{dx}$ (Denominator) is set to zero and we get,

$$\text{or } \frac{d}{dx}\left(S\cos\theta + \frac{P_{core}}{x} + x\,P_{cu}\right) = 0$$

$$\text{or } -\frac{P_{core}}{x^2} + P_{cu} = 0$$

$$\text{or } x^2 P_{cu} = P_{core}$$

$$\text{The loading for maximum efficiency, } x = \sqrt{\frac{P_{core}}{P_{cu}}}$$

Thus we see that for a given power factor, transformer will operate at maximum efficiency when it is loaded to $\sqrt{\frac{P_{core}}{P_{cu}}}\,S$ KVA. For transformers intended to be used continuously at its rated KVA, should be designed such that maximum efficiency occurs at x = 1. Power transformers fall under this category. However for transformers whose load widely varies over time, it is not desirable to have maximum efficiency at x = 1. Distribution transformers fall under this category and the typical value of x for maximum efficiency for such transformers may between 0.75 to 0.8. Figure 25.5 show a family of efficiency Vs. degree of loading curves with power factor as parameter. It can be seen that for any given power factor, maximum efficiency occurs at a loading of $x = \sqrt{\frac{P_{core}}{P_{cu}}}$. Efficiencies η_{max1}, η_{max2} and η_{max3} are respectively the maximum efficiencies corresponding to power factors of unity, 0.8 and 0.7 respectively. It can easily be shown that for a given load (i.e., fixed x), if power factor is allowed to vary then maximum efficiency occurs at unity power factor. Combining the above observations we can say that the efficiency is obtained when the loading of the transformer is $x = \sqrt{\frac{P_{core}}{P_{cu}}}$ and load power factor is unity. Transformer being a static device its efficiency is very high of the order of 98% to even 99%.

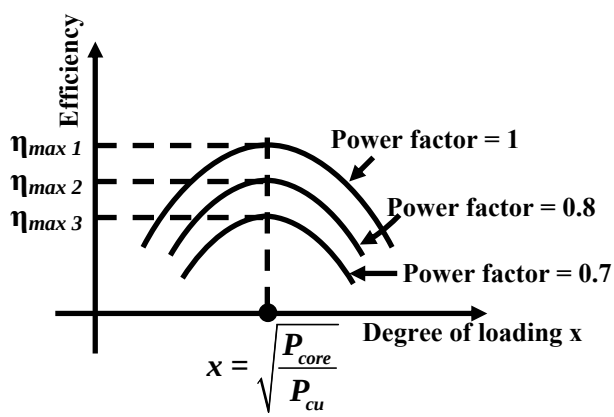

Figure 25.5: Efficiency VS degree of loading curves.

25.3.1 All day efficiency

In the earlier section we have seen that the efficiency of the transformer is dependent upon the degree of loading and the load power factor. The knowledge of this efficiency is useful provided the load and its power factor remains constant throughout.

For example take the case of a *distribution transformer*. The transformers which are used to supply LT consumers (residential, office complex etc.) are called distribution transformers. For obvious reasons, the load on such transformers vary widely over a day or 24 hours. Some times the transformer may be practically under no load condition (say at mid night) or may be over loaded during peak evening hours. Therefore it is not fare to judge efficiency of the

transformer calculated at a particular load with a fixed power factor. *All day efficiency*, alternatively called *energy efficiency* is calculated for such transformers to judge how efficient are they. To estimate the efficiency the whole day (24 hours) is broken up into several time blocks over which the load remains constant. The idea is to calculate total amount of energy output in KWH and total amount of energy input in KWH over a complete day and then take the ratio of these two to get the energy efficiency or all day efficiency of the transformer. Energy or All day efficiency of a transformer is defined as:

$$\eta_{\text{all day}} = \frac{\text{Energy output in KWH in 24 hours}}{\text{Energy input in KWH in 24 hours}}$$

$$= \frac{\text{Energy output in KWH in 24 hours}}{\text{Output in KWH in 24 hours} + \text{Energy loss in 24 hours}}$$

$$= \frac{\text{Output in KWH in 24 hours}}{\text{Output in KWH in 24 hours} + \text{Loss in core in 24 hours} + \text{Loss in the Winding in 24 hours}}$$

$$= \frac{\text{Energy output in KWH in 24 hours}}{\text{Energy output in KWH in 24 hours} + 24\,P_{\text{core}} + \text{Energy loss (cu) in the winding in 24 hours}}$$

With primary energized all the time, constant P_{core} loss will always be present no matter what is the degree of loading. However copper loss will have different values for different time blocks as it depends upon the degree of loadings. As pointed out earlier, if P_{cu} is the full load copper loss corresponding to $x = 1$, copper loss at any arbitrary loading x will be $x^2\,P_{cu}$. It is better to make the following table and then calculate $\eta_{all\ day}$.

Time blocks	KVA Loading	Degree of loading x	P.F of load	KWH output	KWH cu loss
T_1 hours	S_1	$x_1 = S_1/S$	$\cos\theta_1$	$S_1 \cos\theta_1 T_1$	$x_1^2\,P_{cu}\,T_1$
T_2 hours	S_2	$x_2 = S_2/S$	$\cos\theta_2$	$S_2 \cos\theta_2 T_2$	$x_2^2\,P_{cu}\,T_2$
…	…	…	…	…	…
T_n hours	S_n	$x_n = S_n/S$	$\cos\theta_n$	$S_n \cos\theta_n T_n$	$x_n^2\,P_{cu}\,T_n$

$$\text{Note that } \sum_{i=1}^{n} T_i = 24$$

$$\text{Energy output in 24 hours} = \sum_{i=1}^{n} S_i \cos\theta_i\, T_i$$

$$\text{Total energy loss} = 24\,P_{core} + \sum_{i=1}^{n} x_i^2\, P_{cu}\, T_i$$

$$\eta_{allday} = \frac{\sum_{i=1}^{n} S_i \cos\theta_i\, T_i}{\sum_{i=1}^{n} S_i \cos\theta_i\, T_i + \sum_{i=1}^{n} x_i^2\, P_{cu}\, T_i + 24\,P_{core}}$$

25.4 Regulation

The output voltage in a transformer will not be maintained constant from no load to the full load condition, for a fixed input voltage in the primary. This is because there will be internal voltage drop in the series leakage impedance of the transformer the magnitude of which will depend upon the degree of loading as well as on the power factor of the load. The knowledge of *regulation* gives us idea about change in the magnitude of the secondary voltage from no load to full load condition at a given power factor. This can be determined experimentally by direct loading of the transformer. To do this, primary is energized with rated voltage and the secondary terminal voltage is recorded in absence of any load and also in presence of full load. Suppose the readings of the voltmeters are respectively V_{20} and V_2. Therefore change in the magnitudes of the secondary voltage is $V_{20} - V_2$. This change is expressed as a percentage of the no load secondary voltage to express regulation. Lower value of regulation will ensure lesser fluctuation of the voltage across the loads. If the transformer were ideal regulation would have been zero.

$$\text{Percentage Regulation}, \%R = \frac{(V_{20} - V_2)}{V_{20}} \times 100$$

For a well designed transformer at full load and 0.8 power factor load percentage regulation may lie in the range of 2 to 5%. However, it is often not possible to fully load a large transformer in the laboratory in order to know the value of regulation. Theoretically one can estimate approximately, regulation from the equivalent circuit. For this purpose let us draw the equivalent circuit of the transformer referred to the secondary side and neglect the effect of no load current as shown in the figure 25.6. The corresponding phasor diagram referred to the secondary side is shown in figure 25.7.

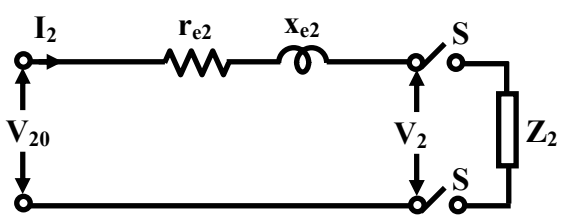

Approximate Equivalent Circuit referred to secondary

Figure 25.6: Equivalent circuit ref. to secondary.

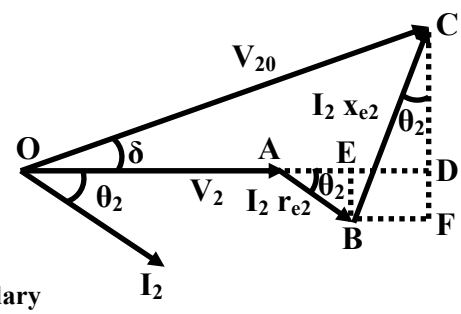

Figure 25.7: Phasor diagram ref. to secondary.

It may be noted that when the transformer is under no load condition (i.e., S is opened), the terminal voltage V_2 is same as V_{20}. However, this two will be different when the switch is closed due to drops in $I_2\ r_{e2}$ and $I_2\ x_{e2}$. For a loaded transformer the phasor diagram is drawn taking terminal voltage V_2 on reference. In the usual fashion I_2 is drawn lagging V_2, by the power factor angle of the load θ_2 and the drops in the equivalent resistance and leakage reactances are added to get the phasor V_{20}. Generally, the resistive drop $I_2\ r_{e2}$ is much smaller than the reactive drop $I_2\ x_{e2}$. It is because of this the angle between OC and OA (δ) is quite small. Therefore as per the definition we can say regulation is

$$R = \frac{(V_{20} - V_2)}{V_{20}} = \frac{OC - OA}{OC}$$

An approximate expression for regulation can now be easily derived geometrically from the phasor diagram shown in figure 25.7.

$$\begin{aligned}
\text{OC} &= \text{OD since, } \delta \text{ is small} \\
\text{Therefore, OC} - \text{OA} &= \text{OD} - \text{OA} \\
&= \text{AD} \\
&= \text{AE} + \text{ED} \\
&= I_2\, r_{e2} \cos\theta_2 + I_2\, x_{e2} \sin\theta_2 \\
\text{So per unit regulation, } R &= \frac{OC - OA}{OC} \\
&= \frac{I_2\, r_{e2} \cos\theta_2 + I_2\, x_{e2} \sin\theta_2}{V_{20}} \\
\text{or, } R &= \frac{I_2\, r_{e2}}{V_{20}} \cos\theta_2 + \frac{I_2\, x_{e2}}{V_{20}} \sin\theta_2
\end{aligned}$$

It is interesting to note that the above regulation formula was obtained in terms of quantities of secondary side. It is also possible to express regulation in terms of primary quantities as shown below:

$$\text{We know, } R = \frac{I_2\, r_{e2}}{V_{20}} \cos\theta_2 + \frac{I_2\, x_{e2}}{V_{20}} \sin\theta_2$$

Now multiplying the numerator and denominator of the RHS by a the turns ratio, and further manipulating a bit with a in numerator we get:

$$\text{R} = \frac{(I_2/a)a^2\, r_{e2}}{aV_{20}} \cos\theta_2 + \frac{(I_2/a)a^2\, x_{e2}}{aV_{20}} \sin\theta_2$$

Now remembering, that $(I_2/a) = I_2'$, $a^2 r_{e2} = r_{e1}$, $a^2 x_{e2} = x_{e1}$ and $aV_{20} = V_{20}' = V_1$; we get regulation formula in terms of primary quantity as:

$$\begin{aligned}
R &= \frac{I_2'\, r_{e1}}{V_{20}'} \cos\theta_2 + \frac{I_2'\, x_{e1}}{V_{20}'} \sin\theta_2 \\
\text{Or, } R &= \frac{I_2'\, r_{e1}}{V_1} \cos\theta_2 + \frac{I_2'\, x_{e1}}{V_1} \sin\theta_2 \\
\text{Neglecting no load current: } R &\approx \frac{I_1\, r_{e1}}{V_1} \cos\theta_2 + \frac{I_1\, x_{e1}}{V_1} \sin\theta_2
\end{aligned}$$

Thus regulation can be calculated using either primary side quantities or secondary side quantities, since:

$$R = \frac{I_2\, r_{e2}}{V_{20}} cos\,\theta_2 + \frac{I_2\, x_{e2}}{V_{20}} sin\,\theta_2 = \frac{I_1\, r_{e1}}{V_1} cos\,\theta_2 + \frac{I_1\, x_{e1}}{V_1} sin\,\theta_2$$

Now the quantity $\frac{I_2 r_{e2}}{V_{20}}$, represents what fraction of the secondary no load voltage is dropped in the equivalent winding resistance of the transformer. Similarly the quantity $\frac{I_2 x_{e2}}{V_{20}}$ represents what fraction of the secondary no load voltage is dropped in the equivalent leakage reactance of the transformer. If I_2 is rated curerent, then these quantities are called the per unit resistance and per unit leakage reactance of the transformer and denoted by $\in_r$ and $\in_x$ respectively. The terms $\in_r = \frac{I_{2rated} r_{e2}}{V_{20}}$ and $\in_x = \frac{I_{2rated} x_{e2}}{V_{20}}$ are called the per unit resistance and per unit leakage reactance respectively. Similarly, per unit leakage impedance $\in_z$, can be defined.

It can be easily shown that the per unit values can also be calculated in terms of primary quantities as well and the relations are summarised below.

$$\in_r = \frac{I_{2rated}\, r_{e2}}{V_{20}} = \frac{I_{1rated}\, r_{e1}}{V_1}$$

$$\in_x = \frac{I_{2rated}\, x_{e2}}{V_{20}} = \frac{I_{1rated}\, x_{e1}}{V_1}$$

$$\in_z = \frac{I_{2rated}\, z_{e2}}{V_{20}} = \frac{I_{1rated}\, z_{e1}}{V_1}$$

where, $z_{e2} = \sqrt{r_{e2}^2 + x_{e2}^2}$ and $z_{e1} = \sqrt{r_{e1}^2 + x_{e1}^2}$.

It may be noted that the per unit values of resistance and leakage reactance come out to be same irrespective of the sides from which they are calculated. So regulation can now be expressed in a simple form in terms of per unit resistance and leakage reactance as follows.

$$\text{per unit regulation, } R = \in_r cos\,\theta_2 + \in_x sin\,\theta_2$$

$$\text{and \% regulation } R = \left(\in_r cos\,\theta_2 + \in_x sin\,\theta_2\right) \times 100$$

For leading power factor load, regulation may be negative indicating that secondary terminal voltage is more than the no load voltage. A typical plot of *regulation versus power factor* for rated current is shown in figure 25.8.

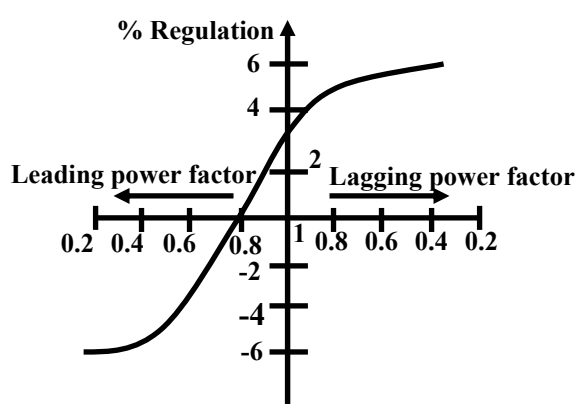

Figure 25.8: Regulation VS power factor curve.

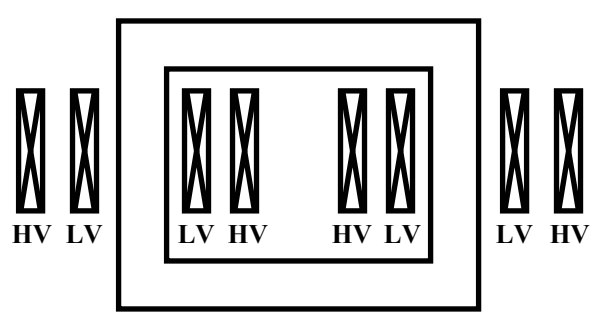

Figure 25.9: LV and HV windings in both the limbs.

To keep the regulation to a prescribed limit of low value, good material (such as copper) should be used to reduce resistance and the primary and secondary windings should be distributed in the limbs in order to reduce leakage flux, hence leakage reactance. The hole LV winding is divided into two equal parts and placed in the two limbs. Similar is the case with the HV windings as shown in figure 25.9.

25.5 Tick the correct answer

1. While carrying out OC test for a 10 kVA, 110 / 220 V, 50 Hz, single phase transformer from LV side at rated voltage, the watt meter reading is found to be 100 W. If the same test is carried out from the HV side at rated voltage, the watt meter reading will be

   (A) 100 W (B) 50 W (C) 200 W (D) 25 W

2. A 20 kVA, 220 V / 110 V, 50 Hz single phase transformer has full load copper loss = 200 W and core loss = 112.5 W. At what kVA and load power factor the transformer should be operated for maximum efficiency?

   (A) 20 kVA & 0.8 power factor (B) 15 kVA & unity power factor

   (C) 20 kVA & unity power factor (D) 15 kVA & 0.8 power factor.

3. A transformer has negligible resistance and has an equivalent *per unit* reactance 0.1. Its voltage *regulation* on full load at 30° leading load power factor angle is:

   (A) +5 % (B) -5 % (C) + 10 % (D) -10 %

4. A transformer operates most efficiently at $\frac{3}{4}$th full load. The ratio of its *iron loss* and *full load copper loss* is given by:

   (A) 16:9 (B) 4:3 (C) 3:4 (D) 9:16

5. Two identical 100 kVA transformer have 150 W iron loss and 150 W of copper loss at rated output. Transformer-1 supplies a constant load of 80 kW at 0.8 power factor lagging throughout 24 hours; while transformer-2 supplies 80 kW at unity power factor for 12 hours and 120 kW at unity power factor for the remaining 12 hours of the day. The *all day efficiency*:

   (A) of transformer-1 will be higher. (B) of transformer-2 will be higher.

   (B) will be same for both transformers. (D) none of the choices.

6. The current drawn on no load by a single phase transformer is $i_0 = 3 \sin(314t - 60°)$ A, when a voltage $v_1 = 300 \sin(314t)V$ is applied across the primary. The values of magnetizing current and the *core loss* component current are respectively:

   (A) 1.2 A & 1.8 A (B) 2.6 A & 1.5 A (C) 1.8 A & 1.2 A (D) 1.5 A & 2.6 A

7. A 4 kVA, 400 / 200 V single phase transformer has 2 % equivalent resistance. The equivalent resistance referred to the HV side in ohms will be:

   (A) 0.2 (B) 0.8 (C) 1.0 (D) 0.25

8. The % resistance and the % leakage reactance of a 5 kVA, 220 V / 440 V, 50 Hz, single phase transformer are respectively 3 % and 4 %. The voltage to be applied to the HV side, to carry out S.C test at rated current is:

   (A) 11 V (B) 15.4 V (C) 22 V (D) 30.8 V

25.6 Solve the Problems

1. A 30KVA, 6000/230V, 50Hz single phase transformer has HV and LV winding resistances of 10.2Ω and 0.0016Ω respectively. The *equivalent* leakage reactance as referred to HV side is 34Ω. Find the voltage to be applied to the HV side in order to circulate the full load current with LV side short circuited. Also estimate the full load % *regulation* of the transformer at 0.8 lagging power factor.

2. A single phase transformer on open circuit condition gave the following test results:

Applied voltage	Frequency	Power drawn
192 V	40 Hz	39.2 W
288 V	60 Hz	73.2 W

   Assuming Steinmetz exponent n = 1.6, find out the *hysteresis* and *eddy current* loss separately if the transformer is supplied with 240 V, 50 Hz.

3. Following are the test results on a 4KVA, 200V/400V, 50Hz single phase transformer. While no load test is carried out from the LV side, the short circuit test is carried out from the HV side.

No load test:	200 V	0.7 A	60 W
Short Circuit Test:	9 V	6 A	21.6 W

   Draw the equivalent circuits (i) referred to LV side and then (ii) referred to HV side and insert all the parameter values.

4. The following data were obtained from testing a 48 kVA, 4800/240V, 50 Hz transformer.

O.C test (from LV side):	240 V	2 A	120 W
S.C test (from HV side):	150 V	10 A	600 W

   (i) Draw the equivalent circuit referred to the HV side and insert all the parameter values.
   (ii) At what kVA the transformer should be operated for *maximum efficiency*? Also calculate the value of maximum efficiency for 0.8 lagging factor load.

Module 7

Transformer

Lesson 26

Three Phase Transformer

Contents

26 Three phase transformer **4**

26.1 Goals of the lesson ……. 4

26.2 Three phase transformer ……. 4

26.3 Introducing basic ideas …….. 4

26.3.1 A wrong star-star connection ……. 7

26.3.2 Bank of three phase transformer …… 7

26.3.3 3-phase transformer – a single unit…….. 12

26.4 Vector Group of 3-phase transformer …… 12

26.5 Tick the correct answer …….. 14

26.6 Problems…….. 15

26.1 Goals of the lesson

Three phase system has been adopted in modern power system to generate, transmit and distribute power all over the world. In this lesson, we shall first discuss how three number of *single phase transformers* can be connected for 3-phase system requiring change of voltage level. Then we shall take up the construction of a 3-phase transformer as a single unit. *Name plate rating* of a three phase transformer is explained. Some basic connections of a 3-phase transformer along with the idea of *vector grouping* is introduced.

Key Words: bank of three phase transformer, vector group.

After going through this section students will be able to answer the following questions.

- Point out one important advantage of connecting a *bank* of 3-phase transformer.
- Point out one disadvantage of connecting a *bank* of 3-phase transformer.
- Is it possible to transform a 3-phase voltage, to another level of 3-phase voltage by using two identical single phase transformers? If yes, comment on the total kVA rating obtainable.
- From the name plate rating of a 3-phase transformer, how can you get individual coil rating of both HV and LV side?
- How to connect successfully 3 coils in delta in a transformer?

26.2 Three phase transformer

It is the three phase system which has been adopted world over to generate, transmit and distribute electrical power. Therefore to change the level of voltages in the system three phase transformers should be used.

Three number of identical single phase transformers can be suitably connected for use in a three phase system and such a three phase transformer is called a *bank of three phase transformer*. Alternatively, a three phase transformer can be constructed as a single unit.

26.3 Introducing basic ideas

In a single phase transformer, we have only two coils namely primary and secondary. Primary is energized with single phase supply and load is connected across the secondary. However, in a 3-phase transformer there will be 3 numbers of primary coils and 3 numbers of secondary coils. So these 3 primary coils and the three secondary coils are to be properly connected so that the voltage level of a balanced 3-phase supply may be changed to another 3-phase balanced system of different voltage level.

Suppose you take three identical transformers each of rating 10 kVA, 200 V / 100 V, 50 Hz and to distinguish them call them as A, B and C. For transformer-A, primary terminals are marked as A_1A_2 and the secondary terminals are marked as a_1a_2. The markings are done in such a way that A_1 and a_1 represent the dot (•) terminals. Similarly terminals for B and C transformers are marked and shown in figure 26.1.

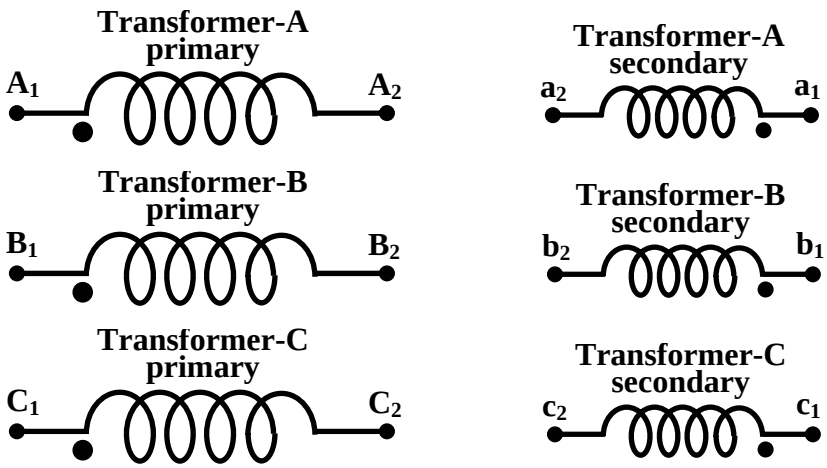

Figure 26.1: Terminal markings along with dots

It may be noted that individually each transformer will work following the rules of single phase transformer i.e, induced voltage in a_1a_2 will be in phase with applied voltage across A_1A_2 and the ratio of magnitude of voltages and currents will be as usual decided by a where $a = N_1/N_2 = 2/1$, the turns ratio. This will be true for transformer-B and transformer-C as well i.e., induced voltage in b_1b_2 will be in phase with applied voltage across B_1B_2 and induced voltage in c_1c_2 will be in phase with applied voltage across C_1C_2.

Now let us join the terminals A_2, B_2 and C_2 of the 3 primary coils of the transformers and no inter connections are made between the secondary coils of the transformers. Now to the free terminals A_1, B_1 and C_1 a balanced 3-phase supply with phase sequence A-B-C is connected as shown in figure 26.2. Primary is said to be connected in star.

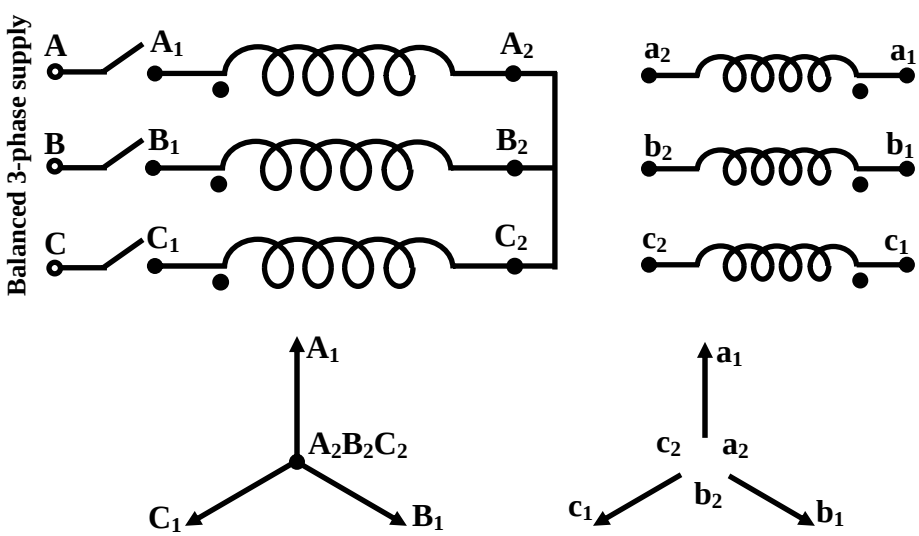

Figure 26.2: Star connected primary with secondary coils left alone.

If the line voltage of the supply is $V_{LL} = 200\sqrt{3}$ V, the magnitude of the voltage impressed across each of the primary coils will be $\sqrt{3}$ times less i.e., 200 V. However, the phasors $\overline{V}_{A_1A_2}$,

$\bar{V}_{B_1B_2}$ and $\bar{V}_{C_1C_2}$ will be have a mutual phase difference of 120º as shown in figure 26.2. Then from the fundamental principle of single phase transformer we know, secondary coil voltage $\bar{V}_{a_1a_2}$ will be parallel to $\bar{V}_{A_1A_2}$; $\bar{V}_{b_1b_2}$ will be parallel to $\bar{V}_{B_1B_2}$ and $\bar{V}_{c_1c_2}$ will be parallel to $\bar{V}_{C_1C_2}$. Thus the secondary induced voltage phasors will have same magnitude i.e., 100 V but are displaced by 120º mutually. The secondary coil voltage phasors $\bar{V}_{a_1a_2}$, $\bar{V}_{b_1b_2}$ and $\bar{V}_{c_1c_2}$ are shown in figure 26.2. Since the secondary coils are not interconnected, the secondary voltage phasors too have been shown independent without any interconnections between them. In contrast, the terminals A_2, B_2 and C_2 are physically joined forcing them to be equipotential which has been reflected in the primary coil voltage phasors as well where phasor points A_2, B_2 and C_2 are also shown joined. Coming back to secondary, if a voltmeter is connected across any coil i.e., between a_1 and a_2 or between b_1 and b_2 or between c_1 and c_2 it will read 100 V. However, voltmeter will not read anything if connected between a_1 and b_1 or between b_1 and c_1 or between c_1 and a_1 as open circuit exist in the paths due to no physical connections between the coils.

Imagine now the secondary coil terminals a_2, b_2 and c_2 are joined together physically as shown in figure 26.3. So the secondary coil phasors should not be shown isolated as a_2, b_2 and c_2 become equipotential due to shorting of these terminals. Thus, the secondary coil voltage phasors should not only be parallel to the respective primary coil voltages but also a_2, b_2 and c_2 should be equipotential. Therefore, shift and place the phasors $\bar{V}_{a_1a_2}$, $\bar{V}_{b_1b_2}$ and $\bar{V}_{c_1c_2}$ in such a way that they remain parallel to the respective primary coil voltages and the points a_2, b_2 and c_2 are superposed.

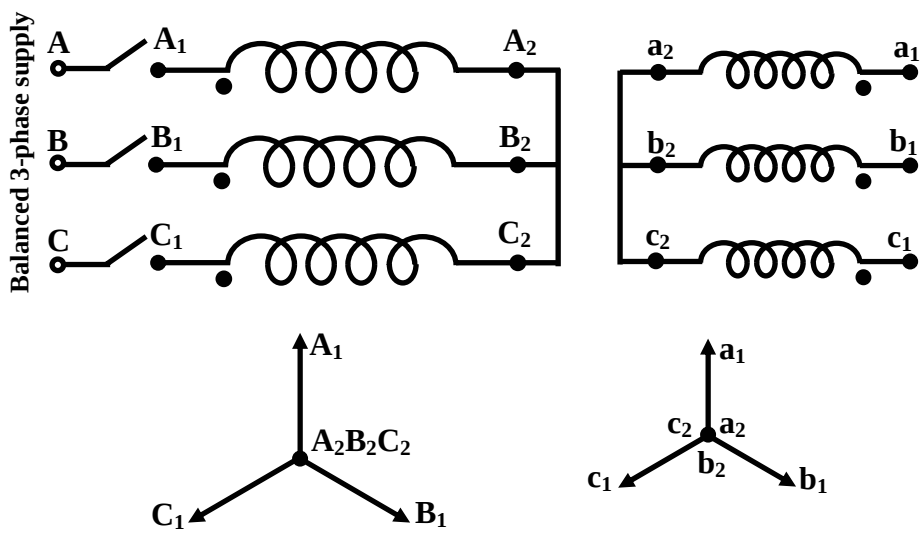

Figure 26.3: Both primary & secondary are star connected.

Here obviously, if a voltmeter is connected between a_1 and b_1 or between b_1 and c_1 or between c_1 and a_1 it will read corresponding phasor lengths a_1b_1 or b_1 c_1 or c_1a_1 which are all equal to $200\sqrt{3}$ V. Thus, $\bar{V}_{a_1b_1}$, $\bar{V}_{b_1c_2}$ and $\bar{V}_{c_2a_1}$ are of same magnitude and displaced mutually by 120º to form a balanced 3-phase voltage system. Primary 3-phase line to line voltage of $200\sqrt{3}$ V is therefore stepped down to 3-phase, $100\sqrt{3}$ V line to line voltage at the secondary. The junction of A_2, B_2 and C_2 can be used as *primary neutral* and may be denoted by N. Similarly the junction of a_2, b_2 and c_2 may be denoted by n for secondary neutral.

26.3.1 A wrong star-star connection

In continuation with the discussion of the last section, we show here a deliberate wrong connection to highlight the importance of proper terminal markings of the coils with dots (•). Let us start from the figure 26.2 where the secondary coils are yet to be connected. To implement star connection on the secondary side, let us assume that someone joins the terminals a_2, b_1 and c_2 together as shown in figure 26.4.

The question is: is it a valid star connection? If not why? To answer this we have to interconnect the secondary voltage phasors in accordance with the physical connections of the coils. In other words, shift and place the secondary voltage phasors so that a_2, b_1 and c_2 overlap each other to make them equipotential. The lengths of phasors $\bar{V}_{a_1a_2}$, $\bar{V}_{b_1b_2}$ and $\bar{V}_{c_1c_2}$ are no doubt, same and equal to 100 V but they do not maintain 120º mutual phase displacement between them as clear from figure 26.4. The magnitude of the line to line voltages too will not be equal. From simple geometry, it can easily be shown that

$$\left|\bar{V}_{a_1b_2}\right| = \left|\bar{V}_{b_2c_1}\right| \neq \left|\bar{V}_{c_1a_1}\right|$$

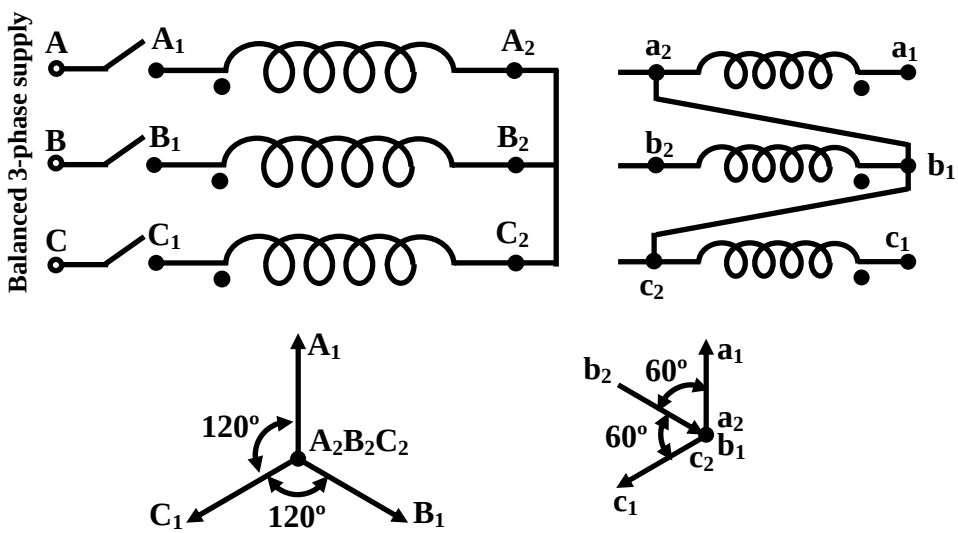

Figure 26.4: Both primary & secondary are star connected.

Thus both the phase as well as line voltages are not balanced 3-phase voltage. Hence the above connection is useless so far as transforming a balanced 3-phase voltage into another level of balanced 3-phase voltage is concerned.

Appropriate polarity markings with letters along with dots (•) are essential in order to make various successful 3-phase transformer connections in practice or laboratory.

26.3.2 Bank of three phase transformer

In the background of the points discussed in previous section, we are now in a position to study different connections of 3-phase transformer. Let the discussion be continued with the same three single phase identical transformers, each of rating 10kVA, 200V / 100V, 50Hz,. These

transformers now should be connected in such a way, that it will change the level of a balanced three phase voltage to another balanced three phase voltage level. The three primary and the three secondary windings can be connected in various standard ways such as *star / star* or *star / delta* or *delta / delta* or in *delta / star* fashion. Apart from these, *open delta* connection is also used in practice.

Star-star connection

We have discussed in length in the last section, the implementation of star-star connection of a 3-phase transformer. The connection diagram along with the phasor diagram are shown in figure 26.5 and 26.6.

As discussed earlier, we need to apply to the primary terminals ($A_1B_1C_1$) a line to line voltage of $200\sqrt{3}$ V so that rated voltage (200 V) is impressed across each of the primary coils of the individual transformer. This ensures 100 V to be induced across each of the secondary coil and the line to line voltage in the secondary will be $100\sqrt{3}$ V. Thus a 3-phase line to line voltage of $200\sqrt{3}$ V is stepped down to a 3-phase line to line voltage of $100\sqrt{3}$ V. Now we have to calculate how much load current or kVA can be supplied by this bank of three phase transformers without over loading any of the single phase transformers. From the individual rating of each transformer, we know maximum allowable currents of HV and LV windings are respectively I_{HV} = 10000/200 = 50A and I_{LV} = 10000/100 = 100A. Since secondary side is connected in star, line current and the winding currents are same. Therefore total kVA that can be supplied to a balanced 3-phase load is $\sqrt{3}V_{LL}I_L = \sqrt{3}\left(\sqrt{3}100\right)100 = 30\,\text{kVA}$. While solving problems, it is not necessary to show all the terminal markings in detail and a simple and popular way of showing the same star-star connection is given in figure 26.7.

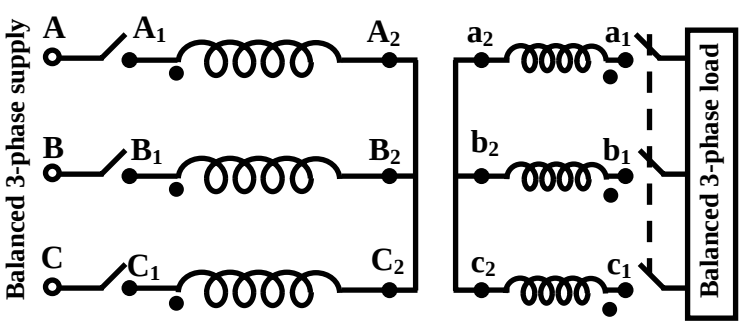

Figure 26.5: Star/star Connection.

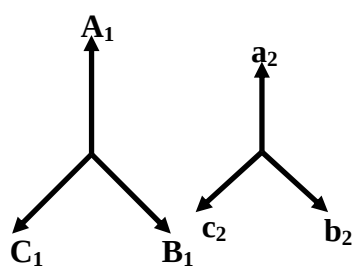

Figure 26.6: Phasor diagram.

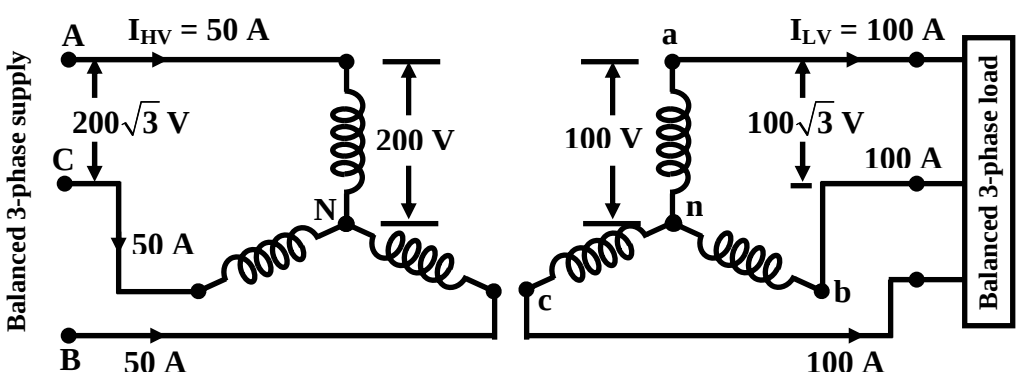

Figure 26.7: Simplified way of showing star-star connection

Star-delta connection

To connect windings in delta, one should be careful enough to avoid dead short circuit. Suppose we want to carry out star / delta connection with the help of the above single phase transformers. HV windings are connected by shorting A_2, B_2 and C_2 together as shown in the figure 26.8. As we know, in delta connection, coils are basically connected in series and from the junction points, connection is made to supply load. Suppose we connect quite arbitrarily (without paying much attention to terminal markings and polarity), a_1 with b_2 and b_1 with c_1. Should we now join a_2 with c_2 by closing the switch S, to complete the delta connection? As a rule, we should not join (i.e., put short circuit) between any two terminals if potential difference exists between the two. It is equivalent to put a short circuit across a voltage source resulting into very large circulating current. Therefore before closing S, we must calculate the voltage difference between a_2 with c_2. To do this, move the secondary voltage phasors such that a_1 and b_2 superpose as well as b_1 with c_1 superpose – this is because a_1 and b_2 are physically joined to make them equipotential; similarly b_1 and c_1 are physically joined so as to make them equipotential. The phasor diagram is shown in figure 26.9. If a voltmeter is connected across S (i.e., between a_2 and c_2), it is going to read the length of the phasor $\bar{V}_{a_2c_2}$. By referring to phasor diagram of figure 26.9, it can be easily shown that the voltage across the switch S, under this condition is $V_{a_2c_2} = 100 + 2\cos 60^o 100 = 200\text{V}$. So this connection is not proper and the switch S should not be closed.

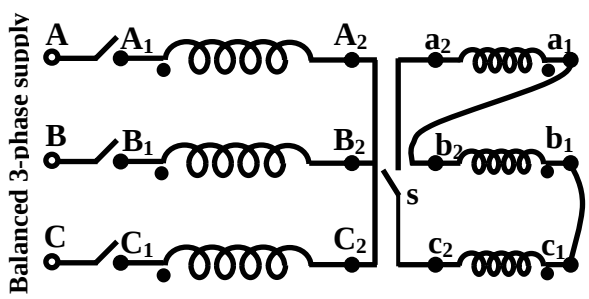

Figure 26.8: Incomplete Connection.

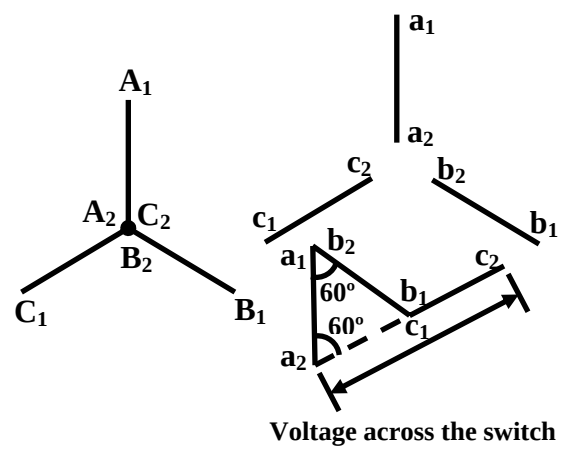

Figure 26.9: Phasor diagram.

Another alternative way to attempt delta connection in the secondary could be: join a_1 with b_2 and b_1 with c_2. Before joining a_2 with c_1 to complete delta connection, examine the open circuit voltage $\bar{V}_{a_2c_1}$. Following the methods described before it can easily be shown that $\bar{V}_{a_2c_1}$ = 0, which allows to join a_2 with c_1 without any circulating current. So this, indeed is a correct delta connection and is shown in figure 26.10 where a_1 is joined with b_2, b_1 is joined with c_2 and c_1 is joined with a_2. The net voltage acting in the closed delta in this case is zero. Although voltage exists in each winding, the resultant sum becomes zero as they are 120° mutually apart. The output terminals are taken from the junctions as *a*, *b* and *c* for supplying 3-phase load. The corresponding phasor diagram is shown in figure 26.11.

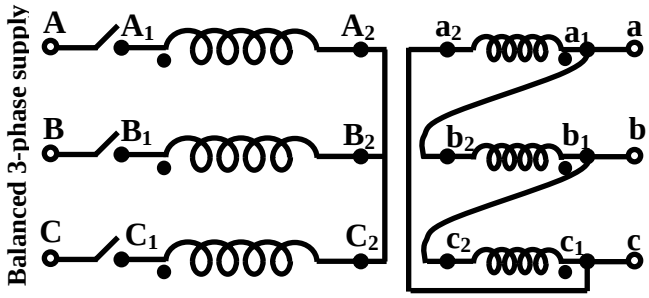

Figure 26.10: Star/delta Connection.

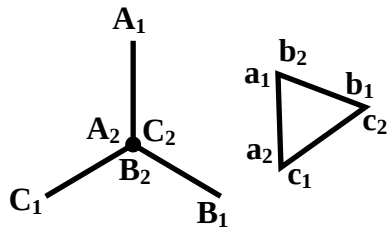

Figure 26.11: Phasor diagram.

Here also we can calculate the maximum kVA this star / delta transformer can handle without over loading any of the constituents transformers. In this case the secondary line to line voltage is same as the winding voltage i.e., 100V, but the line current which can be supplied to the load is $100\sqrt{3}$. Because it is at this line current, winding current becomes the rated 100A. Therefore total load that can be supplied is $\sqrt{3}V_{LL}I_L = \sqrt{3}\ 100\left(\sqrt{3}100\right)\text{VA} = 30\text{kVA}$. Here also total kVA is 3 times the kVA of each transformer. The star-delta connection is usually drawn in a simplified manner for problem solving and easy understanding as shown in figure 26.12.

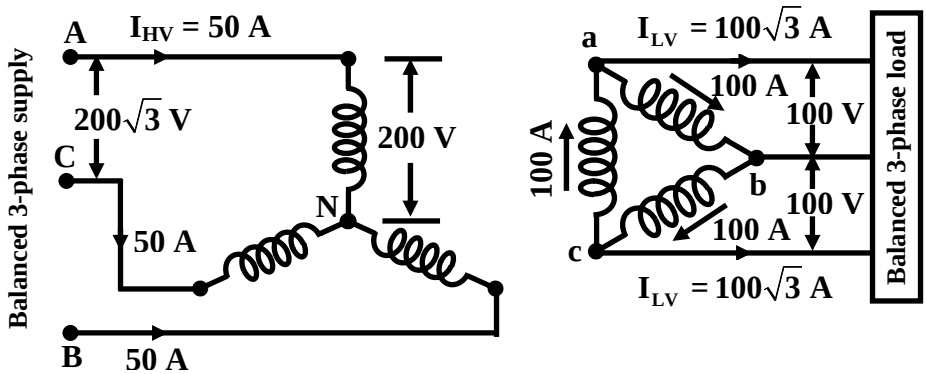

Figure 26.12: Simplified way of showing star-star connection

Another valid delta connection on the LV side is also possible by joining a_2 with b_1, b_2 with c_1 and c_2 with a_1. It is suggested that the reader tries other 3-phase connections and verify that the total KVA is 3-times the individual KVA of each transformer. However, we shall discuss about delta / delta and open delta connection.

Delta / delta and open delta connection

Here we mention about the delta/delta connection because, another important and useful connection namely open delta connection can be understood well. Valid delta connection can be implemented in the usual way as shown in the figure 26.13. The output line to line voltage will be 100V for an input line voltage of 200V. From the secondary one can draw a line current of $100\sqrt{3}$ A which means a total of 30 kVA can be supplied without overloading any of the

individual transformers. A simplified representation of the delta-delta connection is shown in figure 26.15 along with the magnitude of the currents in the lines and in the coils of HV and LV side.

Let us now imagine that the third transformer C be removed from the circuit as shown in the second part of the figure 26.13. In effect now two transformers are present. If the HV sides is energized with three phase 200V supply, in the secondary we get 3-phase balanced 100V supply which is clear from the phasor diagram shown in figure 26.14. Although no transformer winding exist now between A_2 & B_1 on the primary side and between a_2 & b_1 on the secondary side, the voltage between A_2 & B_1 on the primary side and between a_2 & b_1 on the secondary side exist. Their phasor representation are shown by the dotted line confirming balanced 3-phase supply. But what happens to kVA handling capacity of the open delta connection? Is it 20 kVA, because two transformers are involved? Let us see. The line current that we can allow to flow in the secondary is 100A (and not $100\sqrt{3}$ as in delta / delta connection). Therefore total maximum kVA handled is given by $\sqrt{3}V_{LL}I_L = \left(\sqrt{3}\ 100\ 100\right)\ \text{VA} = 17.32\ \text{kVA}$, which is about 57.7% of the delta connected system. This is one of the usefulness of using bank of 3-phase transformers and connecting them in delta-delta. In case one of them develops a fault, it can be removed from the circuit and power can be partially restored.

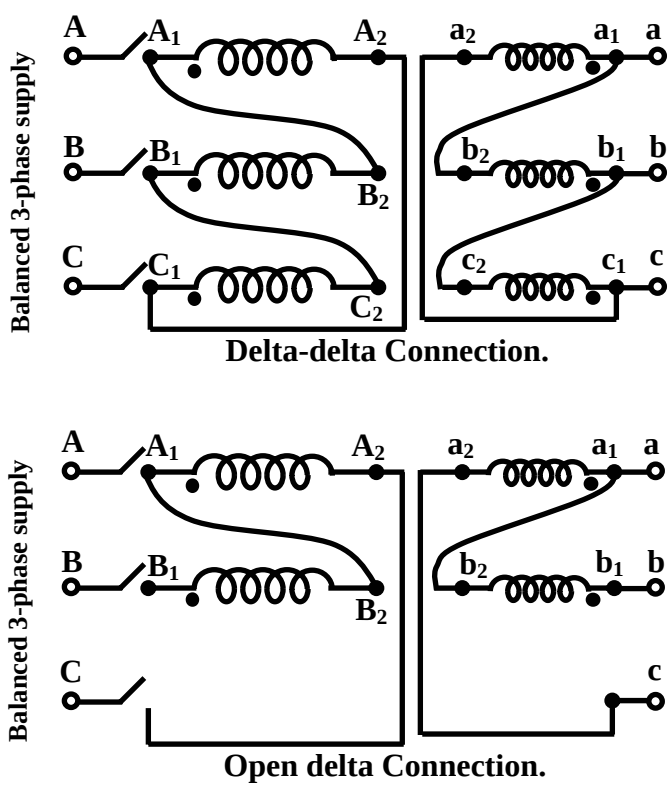

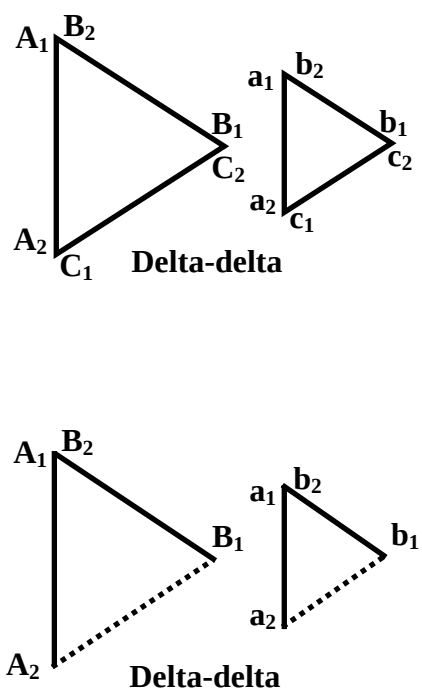

Figure 26.13: Delta/delta and open delta connection. Figure 26.14: Phasor diagram

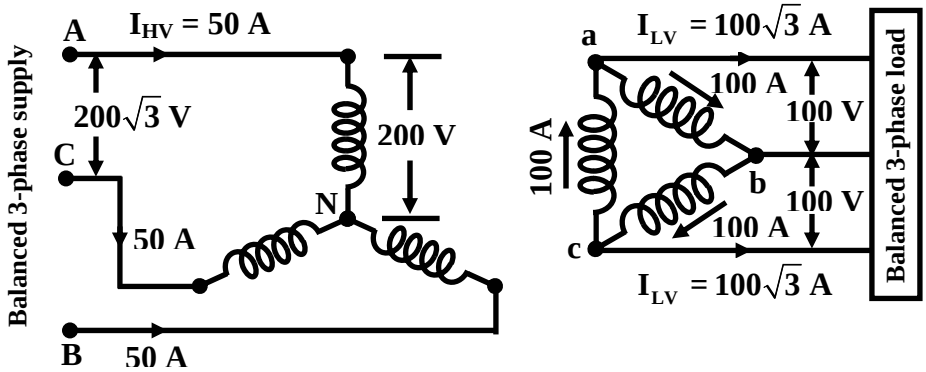

Figure 26.15: Simplified way of showing delta-delta connection

26.3.3 3-phase transformer- a single unit

Instead of using three number of single phase transformers, a three phase transformer can be constructed as a single unit. The advantage of a single unit of 3-phase transformer is that the cost is much less compared to a bank of single phase transformers. In fact all large capacity transformers are a single unit of three phase transformer.

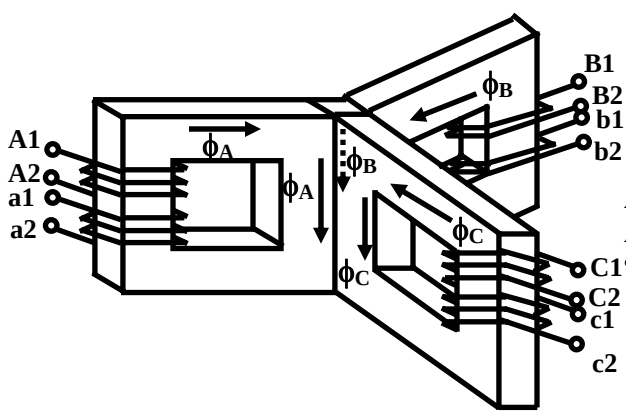

Figure 26.16: A conceptual three phase transformer.

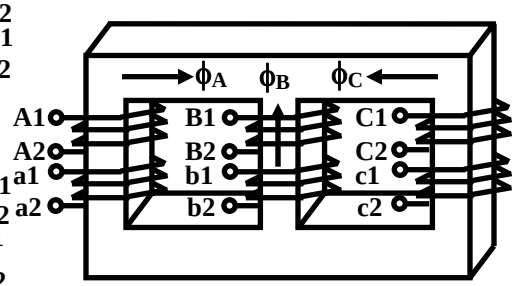

Figure 26.17: A practical core type three phase transformer.

To understand, how it is constructed let us refer to figure 26.16. Here three, single phase transformers are so placed that they share a common central limb. The primary and the secondary windings of each phase are placed on the three outer limbs and appropriately marked. If the primary windings are connected to a balanced 3-phase supply (after connecting the windings in say star), the fluxes $\phi_A(t)$, $\phi_B(t)$ and $\phi_C(t)$ will be produced in the cores differing in time phase mutually by 120°. The return path of these fluxes are through the central limb of the core structure. In other words the central limb carries sum of these three fluxes. Since instantaneous sum of the fluxes, $\phi_A(t)+ \phi_B(t)+ \phi_C(t) = 0$, no flux lines will exist in the central limb at any time. As such the central common core material can be totally removed without affecting the working of the transformer. Immediately we see that considerable saving of the core material takes place if a 3-phase transformer is constructed as a single unit. The structure however requires more floor area as the three outer limbs protrudes outwardly in three different directions.

A further simplification of the structure can be obtained by bringing the limbs in the same plane as shown in the figure 26.17. But what do we sacrifice when we go for this simplified structure? In core structure of figure 26.16, we note that the reluctance seen by the three fluxes are same, Hence magnetizing current will be equal in all the three phases. In the simplified core structure of figure 26.17, reluctance encountered by the flux ϕ_B is different from the reluctance encountered by fluxes ϕ_A and ϕ_C, Hence the magnetizing currents or the no load currents drawn will remain slightly unbalanced. This degree of unbalanced for no load current has practically no influence on the performance of the loaded transformer. Transformer having this type of core structure is called the *core type* transformer.

26.4 Vector Group of 3-phase transformer

The secondary voltages of a 3-phase transformer may undergo a *phase shift* of either +30° leading or -30° lagging or 0° i.e, no phase shift or 180° reversal with respective line or phase to neutral voltages. On the name plate of a three phase transformer, the vector group is mentioned. Typical representation of the vector group could be Yd1 or Dy11 etc. The first capital latter Y indicates that the primary is connected in star and the second lower case latter d indicates delta connection of the secondary side. The third numerical figure conveys the angle of phase shift based on *clock convention*. The minute hand is used to represent the primary phase to neutral voltage and always shown to occupy the position 12. The hour hand represents the secondary phase to neutral voltage and may, depending upon phase shift, occupy position other than 12 as shown in the figure 26.18.

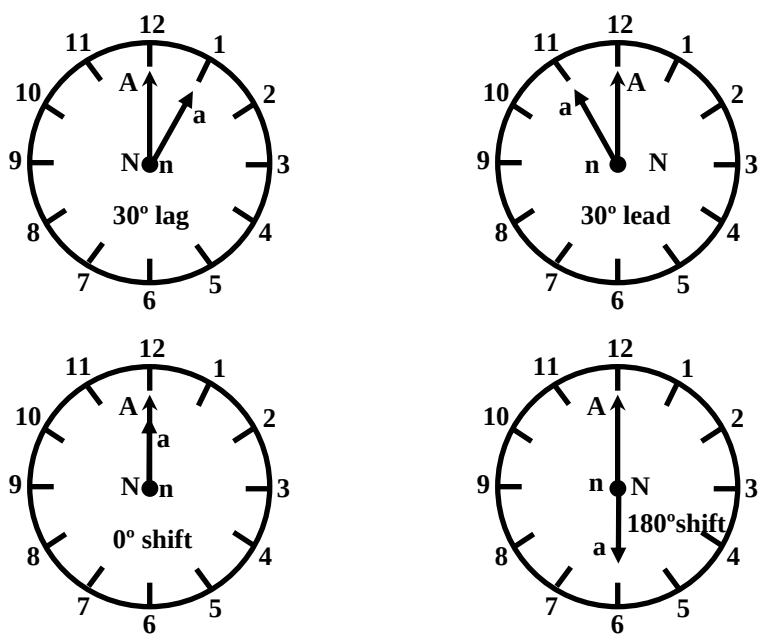

Figure 26.18: Clock convention representing vector groups.

The angle between two consecutive numbers on the clock is 30°. The star-delta connection and the phasor diagram shown in the figures 26.10 and 26.11 correspond to Yd_1. It can be easily seen that the secondary *a* phase voltage to neutral *n* (artificial in case of delta connection) leads the *A* phase voltage to neutral N by 30°. However the star delta connection shown in the figure 26.19 correspond to Yd_{11}.

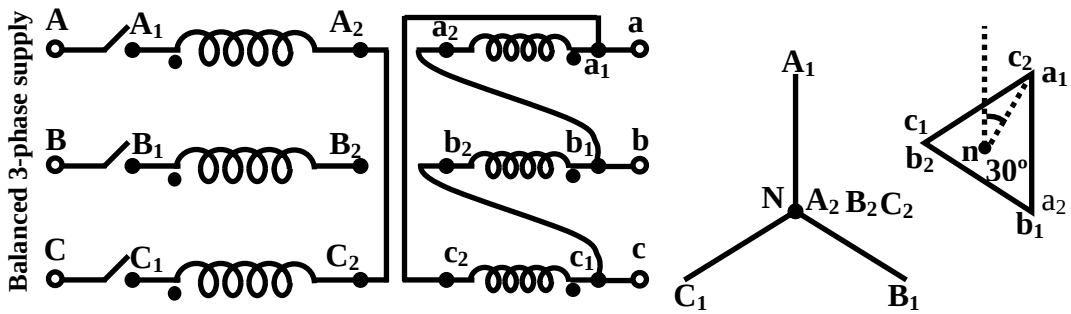

Figure 26.19: Connection and phasor diagram for *Y d*$_{11}$.

26.5 Tick the correct answer

1. The secondary line to line voltage of a star-delta connected transformer is measured to be 400 V. If the turns ratio between the primary and secondary coils is 2 : 1, the applied line to line voltage in the primary is:

   (A) 462 V (B) 346 V (C) 1386 V (D) 800 V

2. The secondary line to line voltage of a delta-delta connected transformer is measured to be 400 V. If the turns ratio between the primary and secondary coils is 2 : 1, the applied line to line voltage in the primary is:

   (A) 462 V (B) 346 V (C) 1386 V (D) 800 V

3. The secondary line to line voltage of a delta-star connected transformer is measured to be 400 V. If the turns ratio between the primary and secondary coils is 2 : 1, the applied line to line voltage in the primary is:

   (A) 800 V (B) 500 V (C) 1386 V (D) 462 V

4. The secondary line current of a star-delta connected transformer is measured to be 100 A. If the turns ratio between the primary and secondary coils is 2 : 1, the line current in the primary is:

   (A) 50 A (B) 28.9 A (C) 57.7 A (D) 60 A

5. The secondary line current of a delta-star connected transformer is measured to be 100 A. If the turns ratio between the primary and secondary coils is 2 : 1, the line current in the primary is:

   (A) 86.6 A (B) 50 A (C) 60 A (D) 57.7 A

6. The primary line current of an open delta connected transformer is measured to be 100 A. If the turns ratio between the primary and secondary coils 2 : 1, the line current in the primary is:

   (A) 173.2 A (B) 200 A (C) 150 A (D) 50 A

7. Two single-phase transformers, each of rating 15 kVA, 200 V / 400 V, 50 Hz are connected in open delta fashion. The arrangement can supply safely, a balanced 3-phase load of:

   (A) 45 kVA (B) 25.9 kVA (C) 30 kVA (D) 7.5 kVA

8. In figure 26.20 showing an incomplete 3-phase transformer connection, the reading of the voltmeter will be:

   (A) 0 V (B) 173.2 V (C) 346.4 V (D) 300 V

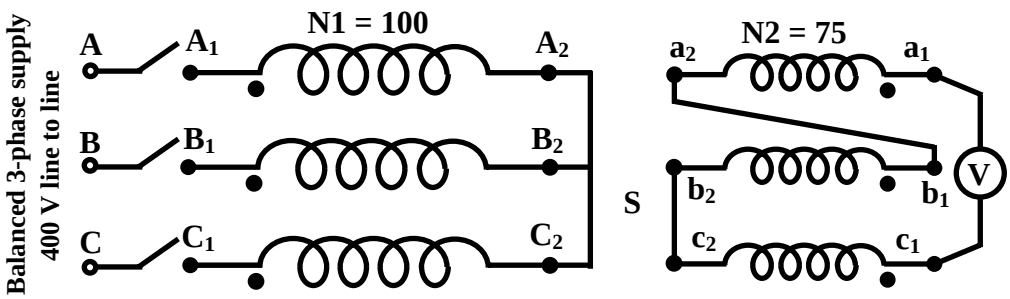

Figure 26.20:

26.6 Problems

1. Three number of single phase *ideal* transformers, each of rating. 10kVA, 200V / 100V, 50Hz is connected in star/delta fashion to supply a balanced three phase 20 kW, 0.8 power factor load at 100V(line to line). Draw a circuit diagram for this. Calculate (i) what line to line voltage should be applied to the primary side? (ii) Calculate the line and phase currents on the secondary and primary sides and indicate them on the diagram.

2. How two identical single phase transformers each of rating 5kVA, 200V/100V, 50Hz be used to step down a balanced 3-phase, 200V supply to a balanced 3-phase, 100V supply? Explain with circuit and phasor diagrams. Calculate also the maximum kVA that can be supplied from this connection.

3. A balanced 3-phase load of 20kW, 0.8 power factor lagging is to be supplied at a line to line voltage of 110V. However, a balanced 3-phase voltage of 381V (line to line) is available. Using three numbers of identical single phase ideal transformers each of rating 10kVA, 220V/110V, 50Hz make an arrangement such that the above load can be supplied. Draw the circuit diagram and show the magnitude of currents in the *lines* and in the *windings* of the transformers on both LV and HV side.

4. Refer to the following figure 26.21 which shows the windings of a 3-phase transformer. Primary turns per phase is 250. Each phase has got two *identical* secondary windings each having 100 turns. The primary windings are connected in star by shorting A_2, B_2 and C_2 and supplied from a balanced 3-phase 1000 V (line to line), 50 Hz source.

   a) If the secondary coils are connected by joining a_2 with b_3 and b_4 with c_1 then calculate $V_{a_1c_1}$.

   b) All the 6 coils are connected in series in the following way:

a_2 joined with b_2	b_1 joined with c_2
c_1 joined with c_4	c_3 joined with b_4
b_3 joined with a_3	

   Draw the phasor diagram and calculate the voltage $V_{a_1a_4}$

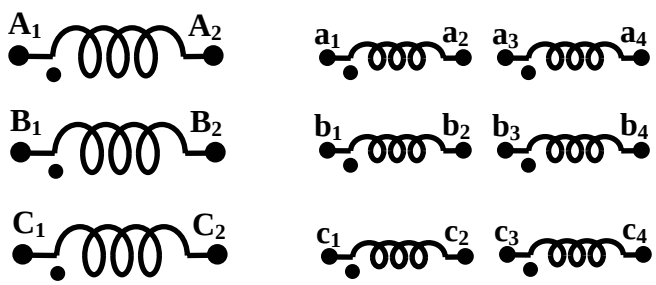

Figure 26.21: 3-phase transformer with two secondary coils per phase

Module 7

Transformer

Lesson 27

Auto-Transformer

Contents

27 Auto-Transformer **4**

27.1 Goals of the lesson ……. 4

27.2 Introduction …… 4

27.3 2-winding transformer as Autotransformer ……... 5

27.4 Autotransformer as a single unit …… 6

27.5 Tick the correct answers …… 9

27.6 Problems ……. 9

27.1 Goals of the lesson

In this lesson we shall learn about the working principle of another type of transformer called *autotransformer* and its uses. The differences between a *2-winding* and an *autotransformer* will be brought out with their relative advantages and disadvantages. At the end of the lesson some objective type questions and problems for solving are given.
Key Words: tapping's, conducted VA, transformed VA.
After going through this section students will be able to understand the following.

1. Constructional differences between a 2-winding transformer and an autotransformer.
2. Economic advantages/disadvantages between the two types.
3. Relative advantages/disadvantages of the two, based on technical considerations.
4. Points to be considered in order to decide whether to select a 2-winding transformer or an autotransformer.
5. The difference between an *autotransformer* and *variac* (or dimmerstat).
6. The use of a 2-winding transformer as an *autotransformer*.
7. The connection of three identical single phase transformers to be used in 3-phase system.

27.2 Introduction

So far we have considered a *2-winding* transformer as a means for changing the level of a given voltage to a desired voltage level. It may be recalled that a *2-winding* transformer has two separate magnetically coupled coils with no electrical connection between them. In this lesson we shall show that change of level of voltage can also be done quite effectively by using a single coil only. The idea is rather simple to understand. Suppose you have a single coil of 200 turns (= N_{BC}) wound over a iron core as shown in figure 27.1. If we apply an a.c voltage of 400 V, 50 Hz to the coil (between points B and C), voltage per turn will be 400/200 = 2 V. If we take out a wire from one end of the coil say C and take out another wire tapped from any arbitrary point E, we would expect some voltage available between points E and C. The magnitude of the voltage will obviously be $2 \times N_{EC}$ where N_{EC} is the number of turns between points E and C. If tapping has been taken in such a way that $N_{EC} = 100$, voltage between E and C would be 200 V. Thus we have been able to change 400 V input voltage to a 200 V output voltage by using a single coil only. Such transformers having a single coil with suitable tapings are called *autotransformers*.

It is possible to connect a conventional *2-winding transformer* as an *autotransformer* or one can develop an *autotransformer* as a single unit.

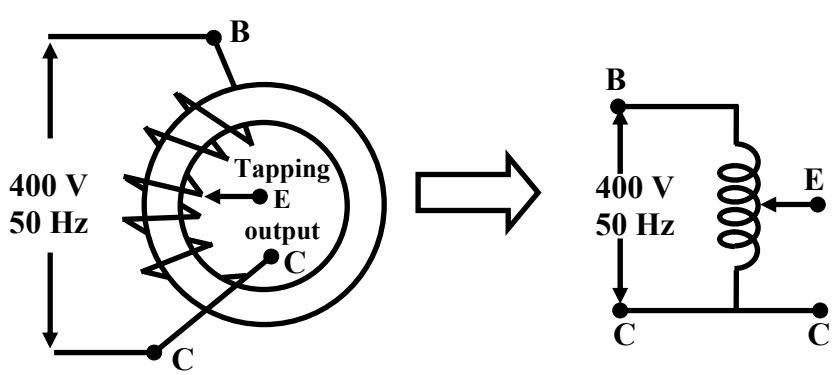

Figure 27.1: Transformer with a single coil.

27.3 2-winding transformer as Autotransformer

Suppose we have a single phase 200V/100V, 50Hz, 10kVA two winding transformer with polarity markings. Then the coils can be connected in various ways to have voltage ratios other than 2 also, as shown in figure 27.2.

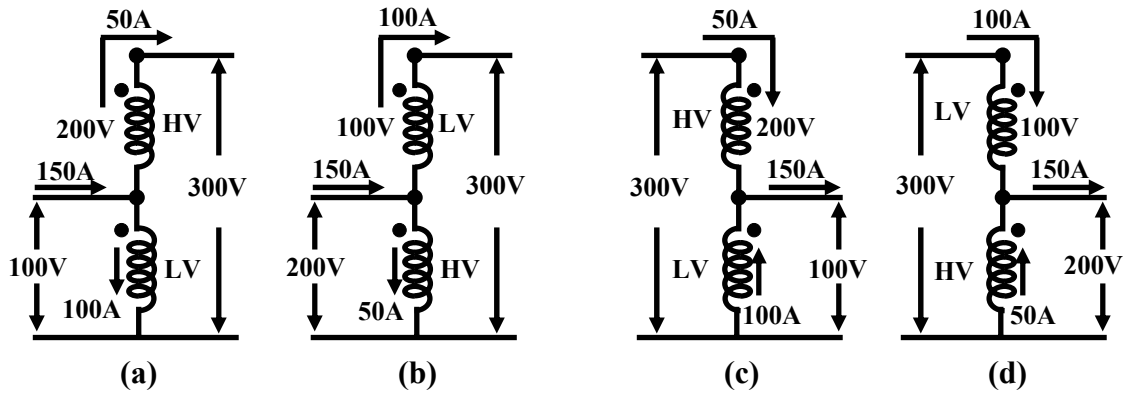

Figure 27.2: A two winding transformer connected as an autotransformer in various ways.

Let us explain the one of the connections in figure 27.2(a) in detail. Here the LV and the HV sides are connected in additive series. For rated applied voltage (100V) across the LV winding, 200V must be induced across the HV winding. So across the whole combination we shall get a voltage of 300V. Thus the input voltage is stepped up by a factor of 3 (300 V/100 V). Now how much current can be supplied to a load at 300 V? From the given rating of the transformer we know, $I_{HV\,\text{rated}}$ = 50 A and $I_{LV\,\text{rated}}$ = 100 A. Therefore for safe operation of the transformer, these rated currents should not be exceeded in HV and LV coils. Since the load is in series with the HV coil, 50A current can be safely supplied. But a current of 50A in the HV demands that the LV winding current must be 100A and in a direction as shown, in order to keep the flux in the core constant. Therefore by applying KCL at the junction, the current drawn from the supply will be 150A. Obviously the kVA handled by the transformer is 30 kVA and without overloading either of the windings. It may look a bit surprising because as a two winding transformer its rating is only 10 kVA. The explanation is not far to seek. Unlike a two winding transformer, the coils here are connected *electrically*. So the kVA transferred from supply to the load side takes place both *inductively* as well as *conductively* – 10kVA being transferred inductively and remaining 20kVA transferred conductively. The other connections shown in (b), (c) and (d) of figure 27.2 can similarly explained and left to the reader to verify.

27.4 Autotransformer as a single unit

Look at the figure 27.3 where the constructional features of an auto transformer is shown. The core is constructed by taking a rectangular long strip of magnetic material (say CRGO) and rolled to give the radial thickness. Over the core, a continuous single coil is wound the free terminals of which are marked as C and A. A *carbon brush* attached to a manually rotating handle makes contact with different number of turns and brought out as a terminal, marked E. The number of turns between E & C, denoted by N_{EC} can be varied from zero to a maximum of total number of turns between A & C i.e, N_{AC}. The output voltage can be varied smoothly from zero to the value of the input voltage simply by rotating the handle in the clockwise direction.

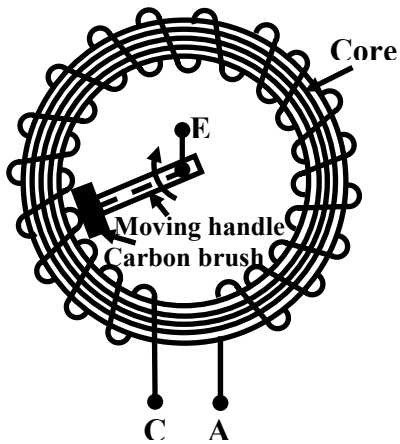

Figure 27.3: Autotransformer or Variac.

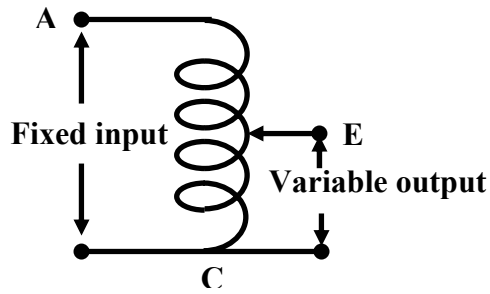

Figure 27.4: Schematic representation of autotransformer.

This type of autotransformers are commercially known as *varic* or *dimmerstat* and is an important piece of equipment in any laboratory.

Now we find that to change a given voltage V_1 to another level of voltage V_2 and to transfer a given KVA from one side to the other, we have *two choices* namely by using a *Two Winding Transformer* or by using an *Autotransformer*. There are some advantages and disadvantages associated with either of them. To understand this aspect let us compare the two types of transformers in equal terms. Let,

Input voltage = V_1

Output voltage required across the load = V_2

Rated current to be supplied to the load = I_2

Current drawn from the supply at rated condition = I_1

KVA to be handled by both types of transformers = $V_1I_1 = V_2I_2$

The above situation is pictorially shown in figures 27.5(a) and (b). Let for the two winding transformer,

For the two winding transformer:

Primary number of turns = N_1

Secondary number of turns = N_2

For the autotransformer:

Number of turns between A & C = N_1

Number of turns between E & C = N_2

Therefore, number of turns between A & E = $N_1 - N_2$

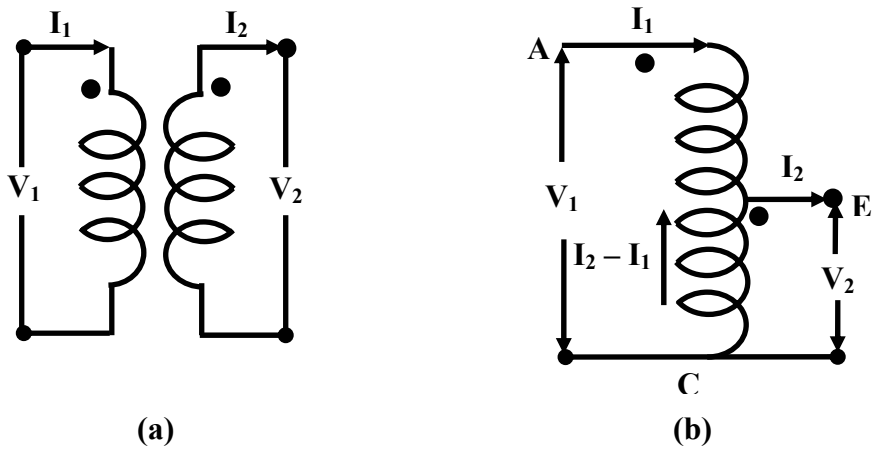

Figure 27.5: A two winding transformer and an autotransformer of same rating.

Let us now right down the mmf balance equation of the transformers.

For the two winding transformer:

MMF balance equation is $N_1 I_1 = N_2 I_2$

For the autotransformer:

MMF balance equation is $(N_1 - N_2)I_1 = N_2(I_2 - I_1)$

or, $N_1 I_1 = N_2 I_2$

It may be noted that in case of an autotransformer, the portion EC is common between the primary and the secondary. At loaded condition current flowing through N_{EC} is $(I_2 - I_1)$. Therefore, compared to a two winding transformer lesser cross sectional area of the conductor in the portion EC can be chosen, thereby saving copper. We can in fact find out the ratio of amount of copper required in two types of transformers noting that the volume of copper required will be proportional to the product of current and the number of turns of a particular coil. This is because, length of copper wire is proportional to the number of turns and crossectional area of wire is proportional to the current value i.e.,

Volume of copper $\propto$ length of the wire $\times$ cross sectional area of copper wire
$\propto N \times I$

Hence,

$$\frac{\text{Amount of copper required in an autotransformer}}{\text{Amount of copper required in a two winding transformer}} = \frac{(N_1 - N_2)I_1 + N_2(I_2 - I_1)}{N_1 I_1 + N_2 I_2}$$

$$\text{Noting that } N_1 I_1 = N_2 I_2 = \frac{2N_1 I_1 - 2N_2 I_1}{2N_1 I_1}$$

$$= \frac{N_1 - N_2}{N_1}$$

$$= 1 - \frac{1}{a} \text{ where, } a \text{ is the turns ratio.}$$

Here we have assumed that N_1 is greater than N_2 i.e., a is greater than 1. The savings will of course be appreciable if the value of a is close to unity. For example if a = 1.2, copper required for autotransformer will be only 17% compared to a two winding transformer, i.e, saving will be about 83%. On the other hand, if a = 2, savings will be only 50%. Therefore, it is always economical to employ autotransformer where the voltage ratio change is close to unity. In fact autotransformers could be used with advantage, to connect two power systems of voltages say 11 kV and 15 kV.

Three similar single units of autotransformers could connected as shown in the figure 27.6 to get variable balanced three phase output voltage from a fixed three phase voltage. Such connections are often used in the laboratory to start 3-phase induction motor at reduced voltage.

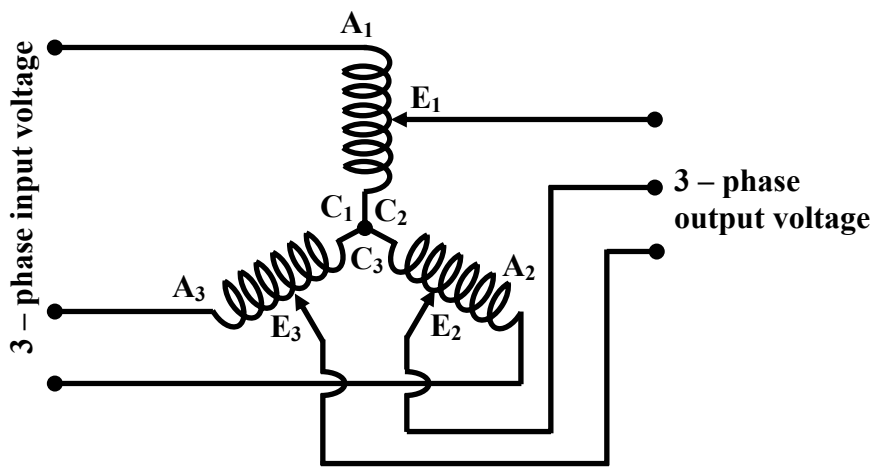

Figure 27.6: 3 – phase autotransformer connection

Apart from being economical, autotransformer has less leakage flux hence improved regulation. Copper loss in the common portion of the winding will be less, so efficiency will be slightly more. However its one major disadvantage is that it can not provide isolation between HV and LV side. In fact, due to an open circuit in the common portion between E & C, the voltage on the load side may soot up to dangerously high voltage causing damage to equipment. This unexpected rise in the voltage on the LV side is potentially dangerous to the personnel working on the LV side.

27.5 Tick the correct answers

1. Savings of copper, in an autotransformer will be significant over a two winding transformer of same rating when the ratio of the voltages is

   (A) ≈ 1 (B) >> 1 (C) = 1 (D) << 1

2. 110 V, 50 Hz single phase supply is needed from a 220 V, 50 Hz source. The ratio of weights of copper needed for a *two winding* and an *autotransformer* employed for the purpose is:

(A) 2 (B) 0.5 (C) 4 (D) 0.25

3. The two winding transformer and the autotransformer of the circuit shown in Figure 27.7 are *ideal*. The current in the section BC of the autotransformer is

(A) 28 A from B to C (B) 12 A from C to B

(C) 28 A from C to B (D) 12 A from B to C

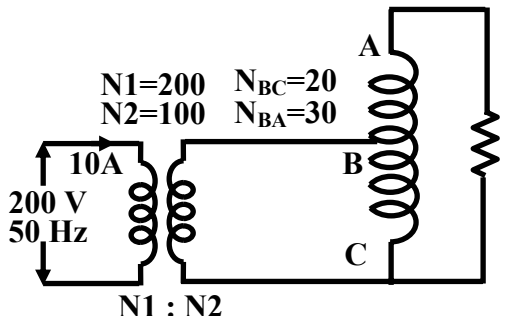

Figure 27.7:

4. A 22 kVA, 110 V/ 220 V, 50 Hz transformer is connected in such away that it steps up 110 V supply to 330 V. The maximum kVA that can be handled by the transformer is

(A) 22 kVA (B) 33 kVA (C) 11 kVA (D) 5.5 kVA

27.6 Problems

1. The following figure 27.8 shows an ideal autotransformer with number of turns of various sections as N_{AB} = 100, N_{CB} = 60 and N_{DB} = 80. Calculate the current drawn from the supply and the input power factor when the supply voltage is 400V, 50Hz.

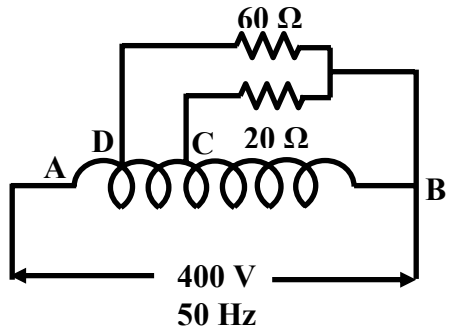

Figure 27.8:

2. An ideal autotransformer steps down a 400 V, single phase voltage to 200 V, single phase voltage. Across the secondary an impedance of (6 + j8)Ω is connected. Calculate the currents in all parts of the circuit.

3. Calculate the values of currents and show their directions in the various branches of a 3-phase, star connected autotransformer of ratio of 400 / 500 V and loaded with 600 kW at 0.85 lagging. Autotransformer may be considered to be ideal. It may be noted that, unless otherwise specified, voltage value of a 3-phase system corresponds to line to line voltage.

4. A delta-star connected 3-phase transformer is supplied with a balanced 3-phase, 400 V supply as shown in figure 27.9. A 3-phase auto transformer is fed from the output of the 3-phase transformer. Finally the at the secondary of the autotransformer a balanced 3-phase load is connected. The per phase primary and secondary turns of both the transformers are given in figure 27.9.

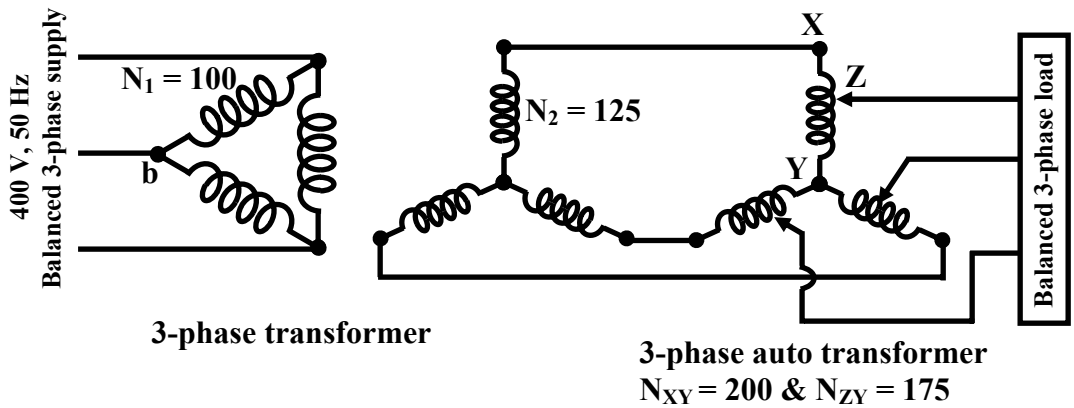

Figure 27.9:

Calculate line to line voltage at which the load receives power. If the load draws 10 A current, calculate currents (a) in the section XZ & ZY of the autotransformer and (b) line currents and coil currents of both the sides of the 3-phase, delta-star connected transformer.

Module 7

Transformer

Lesson 28

Problem solving on Transformers

Version 2 EE IIT, Kharagpur

Contents

28 Problem solving on Transformer (Lesson-28) 4

28.1 Introduction ……. 4

28.2 Problems on 2 winding single phase transformers ……. 4

28.3 Problems on 3-phase ideal transformer ……... 10

28.4 Problems on ideal auto transformers ……... 14

28.1 Introduction

In this lesson some typical problems on transformer are solved with emphasis on logical steps involved. For a practical two winding transformer, the knowledge of approximate equivalent circuit is of utmost importance in order to predict its performance. Equivalent circuit parameters are either supplied directly or indirectly in terms of O.C and S.C test data. The first problem enumerates in detail how to get the equivalent circuit parameters from test data. The importance of the side (LV or HV) in which calculations are carried out is highlighted. The second problem, in fact, is an extension of the first problem. Calculation of regulation, efficiency and maximum efficiency are dealt with in these problems.

Next few problems highlight the basic calculation steps involved in *ideal* 3-phase transformer and *ideal* auto transformer since the equivalent circuit of these transformers are outside the scope of first year electrical technology course.

28.2 Problems on 2 winding single phase transformers

1. The O.C and S.C test data are given below for a single phase, 5 kVA, 200V/400V, 50Hz transformer.

O.C test from LV side :	200V	1.25A	150W
S.C test from HV side :	20VV	12.5A	175W

Draw the equivalent circuit of the transformer (i) referred to LV side and (ii) referred to HV side inserting all the parameter values.

Solution

Let us represent LV side parameters with suffix 1 and HV side parameters with suffix 2.

Computation with O.C test data

Let us show the test data in the approximate equivalent circuit (Figure 28.1) of the transformer as given below.

Due to the fact that the HV side is open circuited, there will be no current in the branch $r_{e1} + jx_{e1}$. So entire power of 150W is practically dissipated in R_{cl1}. The no load current I_{01} = 1.25 A is divided into: magnetizing component I_{m1} and core loss component I_{cl1} as depicted in the phasor diagram figure 28.1.

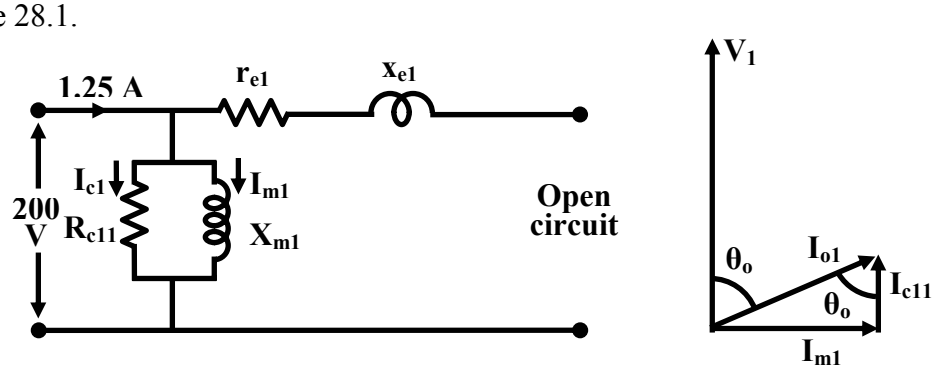

Figure 28.1: O.C equivalent circuit and phasor diagram.

$$\text{No load (or O.C) power factor } \cos\theta_o = \frac{150}{200\times 1.25}$$

$$= 0.6$$

$$\therefore \theta_o = \cos^{-1} 0.6$$

$$= 53.13^{o}$$

$$\text{Hence, } \sin\theta_o = 0.8$$

After knowing the value of $\cos\theta_o$ and $\sin\theta_o$ and referring to the no load phasor diagram, I_{m1} and I_{cl1} can be easily calculated as follows.

$$\text{Magnetizing component } I_{m1} = I_{01}\sin\theta_o$$

$$= 1.25 \times 0.8$$

$$\therefore I_{m1} = 1A$$

$$\text{core loss component, } I_{cl1} = I_{01}\cos\theta_o$$

$$= 1.25 \times 0.6$$

$$\therefore I_{cl1} = 0.75A$$

Thus the parallel branch parameters X_{m1} and R_{cl1} can be calculated.

$$\text{Magnetizing reactance } X_{m1} = \frac{V_1}{I_{m1}}$$

$$= \frac{200}{1}$$

$$\therefore X_{m1} = 200\Omega$$

$$\text{Resistance representing core loss } R_{cl1} = \frac{V_1}{I_{cl1}}$$

$$= \frac{200}{0.75}$$

$$\therefore, R_{cl1} = 266.67\Omega$$

It may be noted that from the O.C test data we can get the parallel branch impedances namely the *magnetizing reactance* and the *resistance representing the core loss* referred to the side where measurements have been taken.

Computation with S.C test data

Since the test has been carried out from the HV side with LV side shorted, we draw the equivalent circuit referred to the HV side as shown in figure 28.2. Parameter values are denoted by using suffix 2. Important point to note here is the absence of the parallel branch. The reason

being, the voltage applied during S.C test is quite low causing a low flux level. Hence magnetizing and core loss component of currents will be pretty small compared to the rated current flowing through $r_{e2} + jx_{e2}$. In this case, power drawn from the supply gets practically dissipated in winding resistances i.e., r_{e2}.

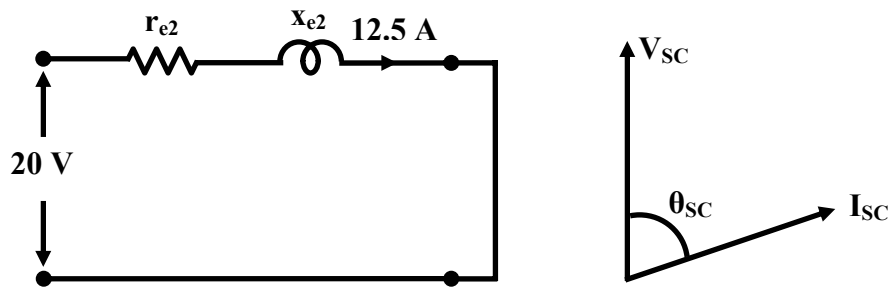

Figure 28.2: O.C equivalent circuit and phasor diagram.

Calculation of series parameters is rather simple and as follows.

$$\text{Power drawn } W_{sc} = I_{sc}^2 r_{e2}$$

$$\text{or, } r_{e2} = \frac{W_{sc}}{I_{sc}^2}$$

$$= \frac{175}{12.5^2}$$

$$\therefore r_{e2} = 1.12\Omega$$

$$\text{Now S.C impedance } z_{sc} = \frac{V_{sc}}{I_{sc}}$$

$$= 20/12.5$$

$$\therefore z_{sc} = 1.6\Omega = \sqrt{r_{e2}^2 + x_{e2^2}}$$

$$\text{Thus, } x_{e2} = \sqrt{z_{sc}^2 - r_{e2^2}}$$

$$= \sqrt{1.6^2 - 1.12^2}$$

$$\therefore x_{e2} = 1.14\Omega$$

Although calculation of parameters from the test results are over, it is *very important* to note that parallel branch parameters have been obtained referred to LV side and series branch parameters have been obtained referred to HV side. However to draw a meaningful equivalent circuit referred to a particular side, *all the parameters are to be represented/calculated referred to that side.*

Equivalent circuit referred LV side

The parallel branch parameters R_{cl1} = 266.67Ω and X_{m1} = 200Ω have already been calculated wrt LV side. Naturally no further transformations are necessary. However, series parameters r_{e2} and x_{e2} have been calculated above from test data. So we need to calculate r_{e1} and x_{e1} in order to correctly represent the equivalent circuit referred to primary side.

$$\begin{aligned}
\text{Turns ratio, } a &= 200/400 = 0.5 \\
\text{but we know, } r_{e1} &= a^2\, r_{e2} \\
\text{and } x_{e1} &= a^2\, x_{e2} \\
\text{Thus } r_{e1} &= 0.5^2 \times 1.12 = 0.28\Omega \\
\text{and } x_{e1} &= 0.5^2 \times 1.14 = 0.285\Omega
\end{aligned}$$

So the equivalent circuit referred to LV side can now be drawn showing all the parameter values as shown below in figure 28.3.

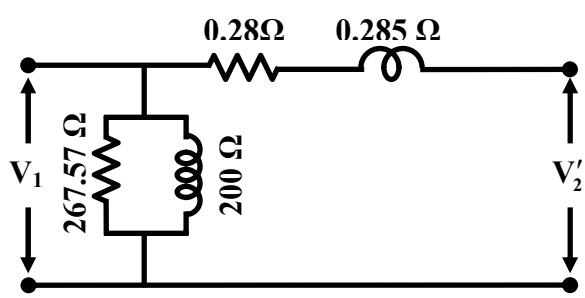

Figure 28.3: Equivalent circuit referred to LV side.

Equivalent circuit referred HV side

Here we note that series parameters referred to HV side are already known to be r_{e2} = 1.12Ω and x_{e2} = 1.14Ω. However, the parallel branch parameters are to be transformed as follows.

$$\begin{aligned}
\text{Turns ratio, } a &= 0.5 \\
\text{but we know, } R_{cl2} &= R_{cl1}/a^2 \\
\text{and } X_{m2} &= X_{m1}/a^2 \\
\text{Thus, } R_{cl2} &= 266.67/0.5^2 = 1066.68\Omega \\
\text{and } X_{m2} &= 200/0.5^2 = 800\Omega
\end{aligned}$$

We are now in a position to draw the equivalent circuit of the same transformer referred to the HV side as shown in figure 28.4.

After getting the equivalent circuit, regulation, efficiency of the transformer can be predicted under various loading conditions. Solution of the next problem shows how equivalent circuit can be used to predict the performance,

2. For the same transformer (single phase, 5 kVA, 200V/400V, 50 Hz) of problem 1, the equivalent circuit of which is known, calculate the following:

i. the efficiency of the transformer at 75% loading with load power factor = 0.7

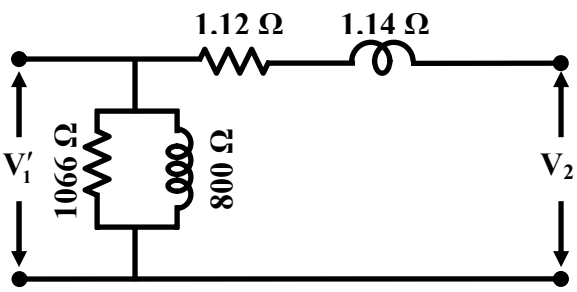

Figure 28.4: Equivalent circuit referred to HV side.

ii. At what load or kVA the transformer is to be operated for maximum efficiency? Also calculate the value of maximum efficiency.
iii. The regulation of the transformer at full load 0.8 power factor lag.
iv. What should be the applied voltage to the LV side when the transformer delivers rated current at 0.7 power factor lagging, at a terminal voltage of 400 V?

Solution

i. From the test data of the previous problem, we have:

$$\text{Full load kVA rating, } S = 5kVA$$

$$\text{Core loss at rated voltage \& frequency, } P_{core} = 150\text{W}$$

$$\text{Full load copper loss, } P_{cu} = 175\text{W}$$

$$\text{We know, efficiency, } \eta = \frac{x\,S\cos\theta}{x\,S\cos\theta + P_{core} + x^2\,P_{cu}}$$

$$\text{75\% loading means, } x = 0.75$$

$$\text{load power factor, } \cos\theta = 0.7$$

$$\therefore \eta = \frac{0.75\times5000\times0.7}{0.75\times5000\times0.7+150+0.75^2\times175}$$

$$= 2625/2873.44$$

$$\therefore \text{ \% efficiency, } \eta = 91.35\%$$

ii. We know maximum efficiency occurs when $x^2P_{cu} = P_{core}$, where P_{cu} is the full load copper loss and P_{core} is the iron loss. Now P_{cu} = 175 W and P_{core} = 120 W.

$$\text{Per unit value of loading for } \eta_{max} \text{ is } x = \sqrt{P_{core}/P_{cu}}$$

$$= \sqrt{120/175}$$

$$\therefore x = 0.83$$

$$\text{Thus the load for } \eta_{max} = x\,S$$

$$= 0.83 \times 5\text{kVA}$$

$$\therefore \text{ the required load for } \eta_{max} = 4.15\text{kVA}$$

iii. To calculate the regulation of the transformer at load current I_2 and load power factor cos θ, we use the following formula in terms of HV side parameters.

$$\text{Per unit regulation, } R = \frac{I_2\, r_{e2} \cos\theta + I_2\, x_{e2} \sin\theta}{V_{20}}$$

$$\text{Putting the values, } R = \frac{12.5 \times 1.12 \times 0.7 + 12.5 \times 1.14 \times 0.71}{400}$$

$$\therefore \text{ \% regulation, } R = 4.9\%$$

iv. It is interesting to note that the difference between the reflected primary supply voltage magnitude $V_1^{'}$ and the secondary load terminal voltage magnitude V_2 is the numerator of the regulation formula used above.

$$V_1^{'} - V_2 = I_2\, r_{e2} \cos\theta + I_2\, x_{e2} \sin\theta$$

$$\text{or, } V_1^{'} = V_2 + I_2\, r_{e2} \cos\theta + I_2\, x_{e2} \sin\theta$$

$$= 12.5 \times 1.12 \times 0.7 + 12.5 \times 1.14 \times 0.71$$

$$= 400 + 19.92\text{V}$$

$$\text{so, } V_1^{'} = 419.92\text{V}$$

Remember $V_1^{'}$ represents the applied voltage to LV calculated in terms of HV side. So the magnitude of the actual voltage to be applied across the primary is:

$$V_1 = a\, V_1^{'}$$

$$= 0.5 \times 419.92$$

$$\therefore V_1 = 210 \text{ V}$$

28.3 Problems on 3-phase ideal transformer

It may be recalled that one can make a 3-phase transformer by using a bank of three numbers of identical single phase transformers or a single unit of a 3-phase transformers.

1. Three single phase *ideal* transformers, each of rating 5kVA, 200V/400V, 50 Hz are available.

   a) The LV sides are connected in star and HV sides are connected in delta. What line to line 3-phase voltage should be applied and what will be the corresponding HV side line to line voltage will be? Also calculate and show the line and phase current magnitudes in both LV & HV sides corresponding to rated condition.

   b) The LV sides are connected in delta and HV sides are connected in delta. What line to line 3-phase voltage should be applied and what will be the corresponding HV side line to line voltage will be? Also calculate and show the line and phase current magnitudes in both LV & HV sides corresponding to rated condition.

Solution

Here the idea is not to exceed the voltage and current rating of HV and LV coils of each single phase transformer. Now for each transformer having rating 5 kVA, 200V/100V, 50 Hz we have:

Rated voltage of each HV coil is	=	200V
Rated voltage of each LV coil is	=	100V
Phase turns ratio is a_{ph}	=	200/100 = 2
Rated current of each HV coil is	=	5000/200 = 25A
Rated current of each LV coil is	=	5000/100 = 50A

Solution of (a)

In this case HV sides are connected in star and LV sides are connected in delta as shown in figure 28.5. Thus line to line voltage to be applied to HV side must not exceed $200\sqrt{3} = 346.4V$. This will ensure that rated voltage is applied across each of the HV coil and rated voltage of 100 V is induced in each of the LV coil. Obviously the available line to line voltage on the LV side will be 100 V since the coils on this side are connected in delta.

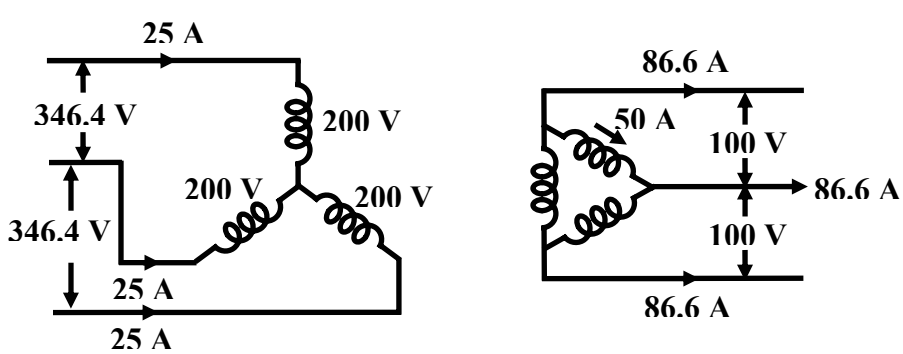

Figure 28.5: Connection of transformers for part (a).

Now the question is how much line current should be allowed to be supplied by the LV side when balanced 3-phase load is connected across it? The constrain is that we should not allow overloading of any of the coils in terms of current as well. Since rated current of each LV side coil is 50 A and the coils are connected in delta, so the corresponding allowed line current in the LV side will be is $50\sqrt{3} = 86.6A$ (Note: line current = $\sqrt{3}$ phase current in delta connection).

But we know for any individual ideal transformer if LV coil carries a 50 A current, the corresponding HV coil must carry a current of $50/a_{ph}$ = 25 A as shown in fig 28.5. Thus HV side line current drawn from the supply must be also 25 A as these coils are connected in star (Note: line current = phase current in star connection).

Now we are in a position to calculate the total kVA handled by the bank of 3-phase transformer. Referring to the LV side the transformers supplies 86.6 A line current at a line to line voltage of 100 V. Therefore, total kVA supplied is equal to $\sqrt{3}\,V_{LL}I_L = \sqrt{3}\times 100\times 86.6\text{ VA} = 15\text{ kVA}$. Similarly total kVA drawn from the supply is calculated as $\sqrt{3}\times 346.4\times 25\,mbox\text{ VA} = 15\text{ kVA}$. Thus we see the total kVA becomes 3 times the individual kVA rating of the transformers. Since the transformers are assumed to be ideal *Total kVA input = Total kVA output*.

Solution of (b)

In this case HV sides are connected in delta and LV sides are connected in star as shown in figure 28.6. Thus line to line voltage to be applied to HV side must not exceed 200V. This will ensure that rated voltage is applied across each of the HV coil and rated voltage of 100 V is induced in each of the LV coils. The available line to line voltage on the LV side will be 100 $\sqrt{3}$ = 173.2 V since coils on this side are connected in star.

Since LV coils are connected in star allowed line current to be delivered is 50 A. So total kVA output is $\sqrt{3}\times 173.2\times 50\text{ VA} = 15\text{ kVA}$. In each HV coil current has to be 25 A and the corresponding supply line current is $\sqrt{3}\times 25 = 43.3A$. Total input kVA is $\sqrt{3}\times 200\times 43.3\text{ VA} = 15\text{ kVA}$. Distribution of phase and line currents in LV and HV sides are shown in figure 28.6.

2. Three identical single phase transformers each of rating 5 kVA, 200V/100V, 50Hz are connected in delta-delta. Calculate what line to line voltage to be applied to the HV side? Also find out corresponding LV side line to line voltage. Find out the kVA rating of the bank such that none of the transformers get over loaded.

Solution

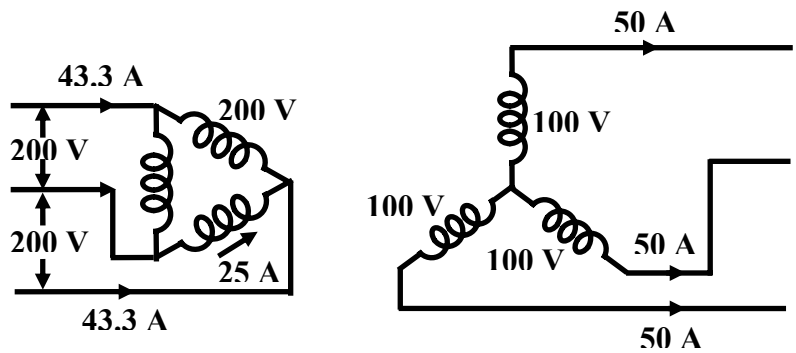

Figure 28.6: Connection of transformers for part (b).

The connection diagram of the delta-delta arrangement is shown in figure 28.7

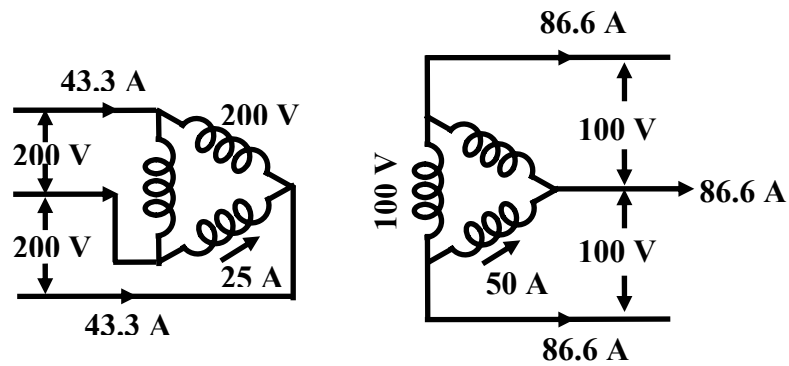

Figure 28.7: Connection of transformers for delta-delta.

As explained in the first two problems, line to line voltage to be applied to the HV side is 200 V because of delta connection. Induced voltage in each coil has to be 100 V in the LV side. Since the LV coils are also connected in delta the line to line voltage on the LV side is 100 V.
Since coil current has to be rated values, line currents on HV and LV sides are obtained as 43.3 A and 86.6 A. Total kVA that can be handled by the bank is $\sqrt{3} \times 200 \times 43.3 \text{ VA} = \sqrt{3} \times 100 \times 86.6 \text{ VA} = 15 \text{ kVA}$.

3. Two identical transformers each of rating 5 kVA, 200V/100V, 50 Hz transformers are connected in *open delta*. Calculate the kVA rating of the open delta bank when HV side is used as primary.

Solution: The relevant connection for open delta is shown in figure 28.8

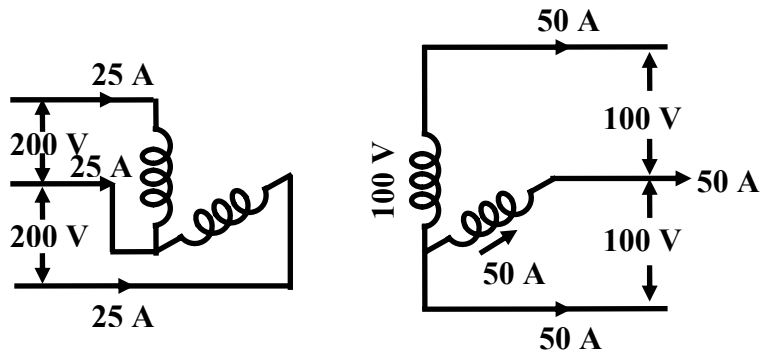

Figure 28.8: Connection of transformers for open delta.

In open delta connection each coil is connected across the lines; therefore, the line to line voltage to be applied to the HV side is 200 V. Induced voltage in the LV coils will be 100 V. Hence line to line voltage in the LV side is 100 V.

A careful look at the circuit in fig 28.8 shows that both HV and LV coils are in series with the lines. Thus if we want the transformers not to be over loaded, line currents on the LV side must be 50 A which automatically fixes the HV side line current to be 25 A.
Let us use $\sqrt{3}\, V_{LL}\, I_L$ to calculate the kVA handled by the bank of two single phase transformers i.e;

$$\text{Total kVA} = \sqrt{3} \times 100 \times 50 = \sqrt{3} \times 200 \times 25 \text{ VA} = 8.66 \text{ kVA}$$

It is interesting to note that in other types of 3-phase connection of transformers such as star-star, star-delta, delta-delta, total kVA handled without overloading any of the transformers is 3 times the individual rating of the transformers. This we learned while solving previous problems where we got the total kVA as 15 kVA $(= 3 \times 5 \text{ kVA})$. But in open delta connection where two single phase identical transformers each of rating 5 kVA has been employed we note the total kVA handled is **not** 10 kVA $(= 2 \times 5)$kVA but 8.66 kVA only. Thus total kVA available as open delta is only $\frac{8.66}{10} \times 100 = 86.6\%$ of the installed capacity.

4. A 3-phase, 500 kVA, 6000V/400V, 50Hz, delta-star connected transformer is delivering 300 kW, at 0.8 pf lagging to a balanced 3-phase load connected to the LV side with HV side supplied from 6000 V, 3- phase supply. Calculate the line and winding currents in both the sides. Assume the transformer to be ideal.

Solution

First note that it is not a bank of single phase transformers. In fact it is a single unit of 3-phase transformer with the name plate rating as 500 kVA, 6000 V/400 V, 50Hz, delta-star connected 3-phase transformer. 500 kVA represents the *total* kVA and voltages specified are always line to line. Similarly unless otherwise specified, kW rating of a 3-phase load is the total kW absorbed by the load. The connection diagram is shown in figure 28.9.

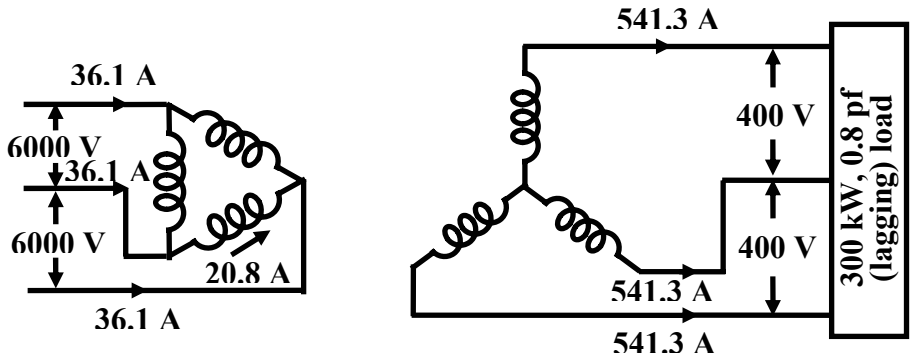

Figure 28.9: Connection diagram with 3-phase load.

Noting the relation kVA, $S = P / \cos\theta$ and $I = S / \sqrt{3}\ V_{LL}$ let us start out calculation.

$$\text{Load kVA} = 300/0.8 = 375 \text{ kVA} = \text{input kVA}$$

$$\text{Line current drawn by the load, } I_{2L} = 375000/\sqrt{3} \times 400$$

$$I_{2L} = 541.3\ A$$

$$\text{Because of star connection, LV coil current} = 541.3\ A$$

$$\text{since input kVA} = 375 \text{ kVA}$$

$$\text{HV side line current, } I_{1L} = \frac{375000}{\sqrt{3} \times 6000}$$

$$\therefore I_{1L} = 36.1\ A$$

Actual phase winding currents can also be calculated as:

$$\text{LV side phase coil current} = \text{LV side line current}$$

$$\text{or, } I_{2ph} = I_{2L}$$

$$\therefore I_{2ph} = 541.3 \text{ A due to star connection.}$$

$$\text{HV side phase coil current} = \text{LV side line current} / \sqrt{3}$$

$$\text{or, } I_{1ph} = I_{1L}/\sqrt{3}$$

$$\therefore I_{1ph} = 36.1/\sqrt{3} = 20.8\ A \text{ due to delta connection.}$$

28.4 Problems on ideal auto transformers

Recall that an auto transformer essentially is essentially a single winding transformer with a portion of the winding common to both supply and the load side. In contrast to a two winding transformer it can not provide isolation between HV and LV side. Here VA is transferred from one side to the other not only by magnetic coupling but also by electrical conduction. Autotransformer becomes cheaper than a similarly rated two winding transformer when the voltage transformation ratio is close to unity. A single phase two winding transformer can be suitably connected to perform like an auto transformer.

1. A 5kVA, 200 V/ 100 V, 50 Hz, single phase ideal two winding transformer is to used to step up a voltage of 200 V to 300 V by connecting it like an auto transformer. Show the connection diagram to achieve this. Calculate the maximum kVA that can be handled by the autotransformer (without over loading any of the HV and LV coil). How much of this kVA is transferred magnetically and how much is transferred by electrical conduction.

Solution

Two connect a two winding transformer as an auto transformer, it is essential to know the dot markings on the two coils. The coils are to be now series connected appropriately so as to identify clearly between which two terminals to give supply and between which two to connect the load. Since the input voltage here is 200 V, supply must be connected across the HV terminals. The induced voltage in the LV side in turn gets fixed to 100 V. But we require 300 V as output, so LV coil is to be connected in additive series with the HV coil. This is what has been shown in figure 28.10.

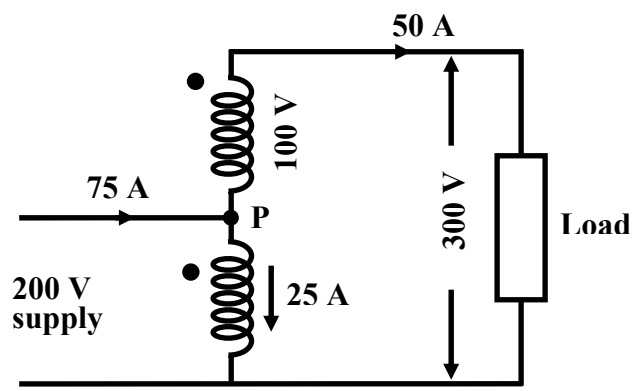

Figure 28.10: Two winding transformer as an autotransformer.

Here the idea is not to exceed the voltage and current rating of HV and LV coils of the two winding transformer. Now for the transformer having rating 5 kVA, 200 V/ 100 V, 50 Hz we have:

$$\text{Rated voltage of HV coil is} = 200 \text{ V}$$
$$\text{Rated voltage of LV coil is} = 100 \text{ V}$$
$$\text{Phase turns ratio is } a = 200/100 = 2$$
$$\text{Rated current of each HV coil is} = 5000/200 = 25 \text{ A}$$
$$\text{Rated current of each LV coil is} = 5000/100 = 50 \text{ A}$$

Since the load is in series with LV coil, so load current is same as the current flowing through the LV coil. Thus a maximum of 50 A can be drawn by the load otherwise overloading of the coils take place.

$$\text{Output kVA} = 300 \times 50 \text{ VA} = 15 \text{ kVA}$$
$$\text{input kVA} = \text{Output kVA} = 15 \text{ kVA}$$
$$\because \text{ transformer is ideal}$$

$$\text{Current drawn form the supply} = 15000/200 = 75 \text{ A}$$

Now the question is now much current is flowing in the HV coil and in which direction? However, this is quite easy since supply and load currents are already known along with their directions as shown in figure 28.10. Applying KCl at the junction P, we get:

$$\text{Current through HV coil } I_{HV} = 75 - 50 = 25 \text{ A}$$

The direction of I_{HV} is obviously from top to bottom. No matter whether a two winding transformer is used as a two winding transformer or as an autotransformer, mmf must be balanced in the coils. If current comes out through the dot terminal in the LV coil, current must flow in through the dot of the HV coil.

It is important to note that as a two winding transformer, kVA handling capacity is 5 kVA, the rating of the transformer. However, the same transformer when connected as auto transformer, kVA handling capacity becomes 15 kVA without overloading any of the coils.

$$\begin{aligned}
\text{kVA transferred magnetically} &= \text{kVA of either HV or LV coil} \\
&= 200 \times 25 \text{ VA} = 100 \times 50 \text{ VA} = 5 \text{ kVA} \\
\therefore \text{kVA transferred magnetically} &= 5kVA \\
\text{kVA transferred electrically} &= \text{total kVA transferred} - \text{kVA transferred magnetically} \\
&= 15 - 5 = 10 \text{ kVA}
\end{aligned}$$

2. An autotransformer has a coil with total number of turns $N_{CD} = 200$ between terminals C and D. It has got one tapping at A such that $N_{AC} = 100$ and another tapping at B such that $N_{BA} = 50$.
   Calculate currents in various parts of the circuit and show their directions when 400 V supply is connected across AC and two resistive loads of 60Ω & 40Ω are connected across BC and DC respectively.

Solution

Let us first draw the circuit diagram (shown in figure 28.11) as per data given in the problem.
First let us calculate the voltages applied across the loads remembering the fact that voltage per turn in a transformer remains constant.

$$\begin{aligned}
\text{Supply voltage across AC, } V_{AC} &= 400\text{V} \\
\text{Number of turns between A \& C } N_{AC} &= 100 \\
\text{Voltage per turn} &= 400/100 = 4\text{V} \\
\text{Voltage across the 40}\Omega\text{ load} &= N_{DC} \times \text{Voltage per turn} \\
&= 200 \times 4 = 800\text{V} \\
\text{So, current through 40}\Omega &= 800/40 = 20\text{A} \\
\text{Voltage across the 60}\Omega\textit{ load} &= N_{BC} \times \text{Voltage per turn}
\end{aligned}$$

$$= \quad 150 \times 4 = 600 \text{ V}$$

$$\text{So, current through } 60\Omega \quad = \quad 600/60 = 10\text{A} \tag{28.1}$$

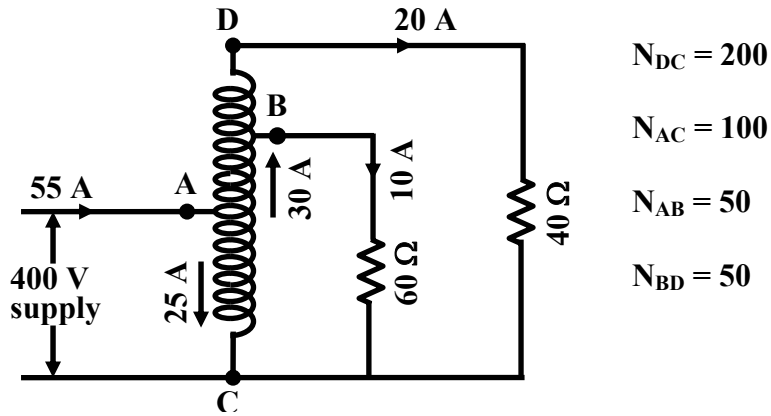

Figure 28.11: Circuit arrangement.

Total output kVA will be the simple addition of the kVAs supplied to the loads i,e.,

$$(600 \times 10 + 800 \times 20) \text{ VA} = 22000 \text{ VA} = 22 \text{ kVA}$$

Assuming the autotransformer to be ideal, input kVA must also be 22 kVA. We are therefore in a position to calculate the current drawn from the supply.

$$\text{Current drawn from the supply} = 22000/400 = 55 \text{ A}$$

Now we know all the load currents and the current drawn from the supply. Current calculations in different parts of the transformer winding becomes pretty simple-one has to apply KCL at the tap points B and A.

$$\text{Current in DB part of the winding } I_{BD} \quad = \quad 20 \text{ A}$$

$$\text{Applying KCL at B, current in AB part } I_{AB} \quad = \quad 20 + 10 = 30 \text{ A}$$

$$\text{Applying KCL at A, current in AC part } I_{AC} \quad = \quad 55 - 30 = 25 \text{ A}$$

It is suggested to repeat the problem if 40Ω resistor is replaced by an impedance $(30 + j40)$ Ω other things remaining unchanged.

Module 8

Three-phase Induction Motor

Lesson 29

Rotating Magnetic Field in Three-phase Induction Motor

In the previous module, containing six lessons (23-28), mainly, the study of the single-phase two-winding Transformers – a static machine, fed from ac supply, has been presented. In this module, containing six lessons (29-34), mainly, the study of Induction motors, fed from balanced three-phase supply, will be described.

In this (first) lesson of this module, the formation of rotating magnetic field in the air gap of an induction motor, is described, when the three-phase balanced winding of the stator is supplied with three-phase balanced voltage. The balanced winding is of the same type, as given in lesson no. 18, for a three-phase ac generator.

Keywords: Induction motor, rotating magnetic field, three-phase balanced winding, and balanced voltage.

After going through this lesson, the students will be able to answer the following questions:

1. How a rotating magnetic field is formed in the air gap of a three-phase Induction motor, when the balanced winding of the stator is fed from a balanced supply?
2. Why does the magnitude of the magnetic field remain constant, and also what is the speed of rotation of the magnetic field, so formed? Also what is meant by the term 'synchronous speed'?

Three-phase Induction Motor

A three-phase balanced winding in the stator of the Induction motor (IM) is shown in Fig. 29.1 (schematic form). In a three-phase balanced winding, the number of turns in three windings, is equal, with the angle between the adjacent phases, say R & Y, is 120° (electrical). Same angle of 120° (elec.) is also between the phases, Y & B.

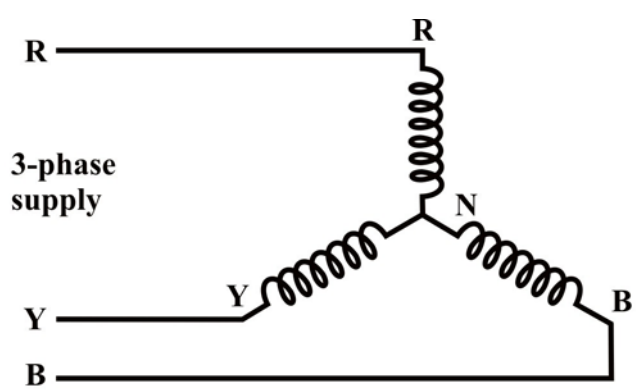

Fig. 29.1: Schematic diagram of the stator windings in a three-phase induction motor.

A three-phase balanced voltage, with the phase sequence as R-Y-B, is applied to the above winding. In a balanced voltage, the magnitude of the voltage in each phase, assumed to be in star in this case, is equal, with the phase angle of the voltage between the adjacent phases, say R & Y, being 120°.

Rotating Magnetic Field

The three phases of the stator winding (balanced) carry balanced alternating (sinusoidal) currents as shown in Fig. 29.2.

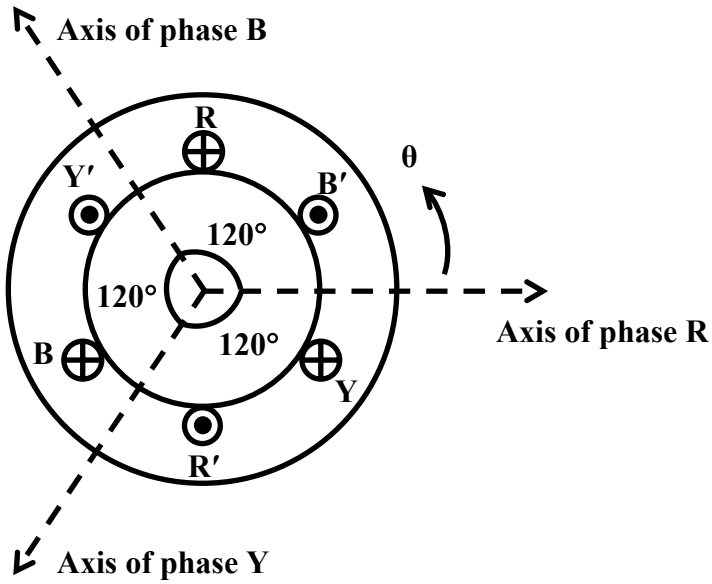

Fig. 29.2: The relative location of the magnetic axis of three phases.

$i_R = I_m \cos \omega t$

$i_Y = I_m \cos (\omega t - 120°)$

$i_B = I_m \cos (\omega t + 120°) = I_m \cos (\omega t - 240°)$

Please note that the phase sequence is R-Y-B. I_m is the maximum value of the phase currents, and, as the phase currents are balanced, the rms values are equal ($|I_R| = |I_Y| = |I_B|$).

Three pulsating mmf waves are now set up in the air-gap, which have a time phase difference of $120°$ from each other. These mmf's are oriented in space along the magnetic axes of the phases, R, Y & B, as illustrated by the concentrated coils in Fig. 29.2. Please note that <u>2-pole</u> stator is shown, with the angle between the adjacent phases, R & Y as $120°$, in both mechanical and electrical terms. Since the magnetic axes are located $120°$ apart in space from each other, the three mmf's are expresses mathematically as

$F_R = F_m \cos \omega t \cos \theta$

$F_Y = F_m \cos (\omega t - 120°) \cos (\theta - 120°)$

$F_B = F_m \cos (\omega t + 120°) \cos (\theta + 120°)$

wherein it has been considered that the three mmf waves differ progressively in time phase by $120°$, i.e. $2\pi/3$ rad (elect.), and are separated in space phase by $120°$, i.e. $2\pi/3$ rad (elect.). The resultant mmf wave, which is the sum of three pulsating mmf waves, is

$$F = F_R + F_Y + F_B$$

Substituting the values,

$$F(\theta, t)$$

$$= F_m [\cos \omega t \cos \theta + \cos(\omega t - 120°) \cos(\theta - 120°) + \cos(\omega t + 120°) \cos(\theta + 120°)]$$

The first term of this expression is

$$\cos \omega t \cos \theta = 0.5 [\cos(\theta - \omega t) + \cos(\theta + \omega t)]$$

The second term is

$$\cos(\omega t - 120°) \cos(\theta - 120°) = 0.5 [\cos(\theta - \omega t) + \cos(\theta + \omega t - 240°)]$$

Similarly, the third term can be rewritten in the form shown.

The expression is

$$F(\theta, t) = 1.5 F_m \cos(\theta - \omega t)$$

$$+ 0.5 F_m \left[\cos(\theta + \omega t) + \cos(\theta + \omega t - 240°) + \cos(\theta + \omega t + 240°)\right]$$

Note that

$\cos(\theta + \omega t - 240°) = \cos(\theta + \omega t + 120°)$, and

$\cos(\theta + \omega t + 240°) = \cos(\theta + \omega t - 120°)$.

If these two terms are added, then

$$\cos(\theta + \omega t + 120°) + \cos(\theta + \omega t - 120°) = -\cos(\theta + \omega t)$$

So, in the earlier expression, the second part of RHS within the capital bracket is zero. In other words, this part represents three unit phasors with a progressive phase difference of $120°$, and therefore add up to zero. Hence, the resultant mmf is

$$F(\theta, t) = 1.5 F_m \cos(\theta - \omega t)$$

So, the resultant mmf is distributed in both space and time. It can be termed as a rotating magnetic field with sinusoidal space distribution, whose space phase angle changes linearly with time as ωt. It therefore rotates at a constant angular speed of ω rad (elect.)/s. This angular speed is called synchronous angular speed (ω_s).

The peak value of the resultant mmf is $F_{peak} = 1.5 F_m$. The value of F_m depends on No. of turns/phase, winding current, No. of poles, and winding factor. At $\omega t = 0$, i.e. when the current in R phase has maximum positive value, $F(\theta, 0) = 1.5 F_m \cos \theta$, i.e. the mmf wave has its peak value (at $\theta = 0$) lying on the axis of R phase, when it carries maximum positive current. At $\omega t = 2\pi/3$ (120°), the phase Y (assumed lagging) has its positive current maximum, so that the peak of the rotating magnetic field (mmf) lying on the axis of Y phase. By the same argument, the peak of the mmf coincides with the axis of phase B at $\omega t = 4\pi/3$ (240°). It is, therefore, seen that the resultant mmf moves from the axis of the leading phase to that of the lagging phase, i.e. from phase R towards phase Y, and then phase B, when the phase sequence of the currents is R-Y-B (R leads Y, and Y leads B). As described in brief later, the direction of rotation of the resultant mmf is reversed by simply changing the phase sequence of currents.

From the above discussion, the following may be concluded: Whenever a balanced three-phase winding with phases distributed in space so that the relative space angle between them is $2\pi/3$ rad (elect.) $[120°]$, is fed with balanced three-phase currents with relative phase difference of $2\pi/3$ rad (elect.) $[120°]$, the resultant mmf rotates in the air-gap at an angular speed of $\omega_s = 2\pi\ (f/p)$, where f is the frequency (Hz) of currents

and p is No. of pairs of poles for which the winding is designed. The synchronous speed in rpm (r/min) is $N_s = \omega_s (60/2\pi) = 60\ (f/p)$. The direction of rotation of the mmf is from the leading phase axis to lagging phase axis. This is also valid for q-phase balanced winding, one value of which may be $q = 2$ (two). For a 2-phase balanced winding, the time and phase angles are $(\pi/2)$ rad or $90°$ (elect.).

Alternatively, this production of rotating magnetic field can be shown by the procedure described. As stated earlier, the input voltage to three-phase balanced winding of the stator is a balanced one with the phase sequence (R-Y-B). This is shown in the sinusoidal voltage waveforms of the three phases, R, Y & B (Fig. 29.3).

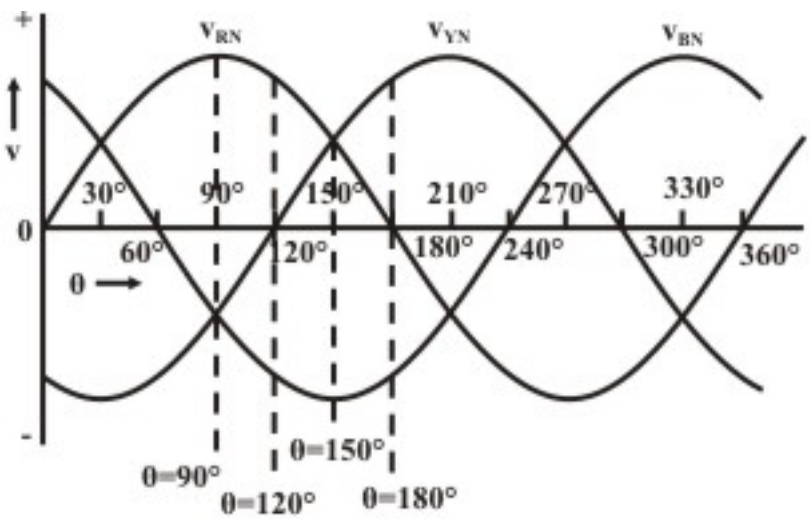

Fig. 29.3: Three-phase voltage waveforms with phase sequence R-Y-B.

A two-pole, three-phase balanced winding in the stator of IM is shown in Fig. 29.4(i)-(a-d), where the winding of each phase, say for example, $(R - R')$ is assumed to be concentrated in one slot each, both for forward and return conductors, with required no. as needed. Same is the case for other two phases. Please note that the angle of $120°$ is same in both mechanical (as shown) and also electrical terms, as no. of poles is <u>two</u> only. The two (forward and return) parts of the winding in each phase, say R are referred as R and R' respectively. So, also for two other phases, Y & B as shown.

Let us first consider, what happens at the time instant t_1, of the voltage waveforms as given in Fig. 29.3. At this instant, the voltage in the R-phase is positive maximum ($\theta_1 = 90°$), while the two other voltages in the phases, Y & B are half of the maximum value, and also negative. The three waveforms are represented by the following equations:

$e_{RN} = E_m \sin\theta$; $e_{YN} = E_m \sin(\theta - 120°)$; $e_{BN} = E_m \sin(\theta + 120°)$

where,

$\theta = \omega t$ (rad)

f = Supply frequency (Hz or c/s)

$\omega = 2\pi f$ = Angular frequency (rad/s)

E_m = Maximum value of the voltage, or induced emf in each phase

The currents in three windings are shown in Fig. 29.4(a)-(i). For ($\theta_1 = 90°$), the current in R-phase in positive maximum, while the currents in both Y and B phases are negative, with magnitude as half of maximum value (0.5). The fluxes due to the currents in the windings are shown in Fig. 29.4(a)-(ii). It may be noted that Φ_R is taken as reference, while Φ_Y leads Φ_R by $60°$ and Φ_B lags Φ_R by $60°$, as can be observed from the direction of currents in all three phases as given earlier. If the fluxes are added to find the resultant in phasor form, the magnitude is found as ($1.5 \cdot \Phi$). It may be noted that this magnitude is same as that found mathematically earlier. Its direction is also shown in same figure. The resultant flux is given by,

$$\Phi_R \angle 0° + \Phi_Y \angle 60° + \Phi_B \angle -60° = (\Phi + 2 \cdot (0.5 \cdot \Phi) \cdot \cos 60°) \cdot 1 \angle 0° = (1.5 \cdot \Phi) \angle 0°$$

Now, let us shift to the instant, t_2 ($\theta_2 = 120°$) as shown in Fig. 29.3. The voltages in the two phases, R & B are ($\sqrt{3}/2 = 0.866$) times the maximum value, with R-phase as positive and B-phase as negative. The voltage in phase Y is zero. This is shown in Fig. 29.4(b)-(i). The fluxes due to the currents in the windings are shown in Fig. 29.4(b)-(ii). As given earlier, Φ_R is taken as reference here, while Φ_B lags Φ_R by $60°$. Please note the direction of the currents in both R and B phases. If the fluxes are added to find the resultant in phasor form, the magnitude is found as ($1.5 \cdot \Phi$). The direction is shown in the same figure. The resultant flux is given by,

$$\Phi_R \angle 0° + \Phi_B \angle -60° = (\Phi_R \angle 30° + \Phi_B \angle -30°) \cdot 1.0 \angle -30°$$
$$= (2 \cdot (0.866 \cdot \Phi) \cdot \cos 30°) \cdot 1 \angle -30° = (1.5 \cdot \Phi) \angle -30°.$$

It may be noted that the magnitude of the resultant flux remains constant, with its direction shifting by $30° = 120° - 90°$ in the clockwise direction from the previous instant.

Similarly, if we now shift to the instant, t_3 ($\theta_3 = 150°$) as shown in Fig. 29.3. The voltage in the B-phase is negative maximum, while the two other voltages in the phases, R & Y, are half of the maximum value (0.5), and also positive. This is shown in Fig. 29.4(c)-(i). The fluxes due to the currents in the windings are shown in Fig. 29.4(c)-(ii). The reference of flux direction (Φ_R) is given earlier, and is not repeated here. If the fluxes are added to find the resultant in phasor form, the magnitude is found as ($1.5 \cdot \Phi$). The direction is shown in the same figure. The resultant flux is given by,

$$\Phi_R \angle 0° + \Phi_Y \angle -120° + \Phi_B \angle -60° = (\Phi_B \angle 0° + \Phi_R \angle 60° + \Phi_Y \angle -60°) \cdot 1.0 \angle -60°$$
$$= (\Phi + 2 \cdot (0.5 \cdot \Phi) \cdot \cos 60°) \cdot 1 \angle -60° = (1.5 \cdot \Phi) \angle -60° \ .$$

It may be noted that the magnitude of the resultant flux remains constant, with the direction shifting by another $30°$ in the clockwise direction from the previous instant.

If we now consider the instant, t_4 ($\theta_4 = 180°$) as shown in Fig. 29.3. The voltages in the two phases, Y & B are ($\sqrt{3}/2$ = 0.866) times the maximum value, with Y-phase as positive and B-phase as negative. The voltage in phase R is zero. This is shown in Fig. 29.4(d)-(i). The fluxes due to the currents in the windings are shown in Fig. 29.4(d)-(ii).

If the fluxes are added to find the resultant in phasor form, the magnitude is found as $(1.5 \cdot \Phi)$. The direction is shown in the same figure. The resultant flux is given by,

$$\Phi_Y \angle -120° + \Phi_B \angle -60° = (\Phi_Y \angle -30° + \Phi_B \angle 30°) \cdot 1\angle -90°$$

$$= (2 \cdot (0.866 \cdot \Phi) \cdot \cos 30°) \cdot 1\angle -90° = (1.5 \cdot \Phi)\angle -90°.$$

It may be noted that the magnitude of the resultant flux remains constant, with its direction shifting by another $30°$ in the clockwise direction from the previous instant.

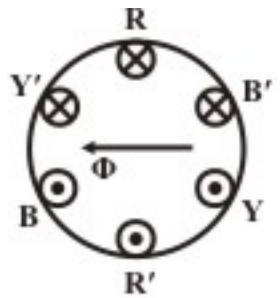

θ = 90°

Fig. 29.4(a)(i)

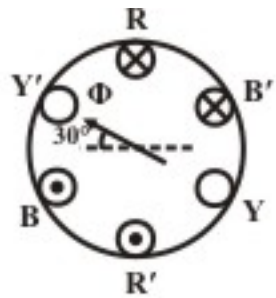

θ = 120°

Fig. 29.4(b)(i)

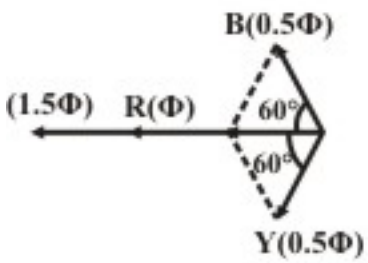

Fig. 29.4(a)(ii)

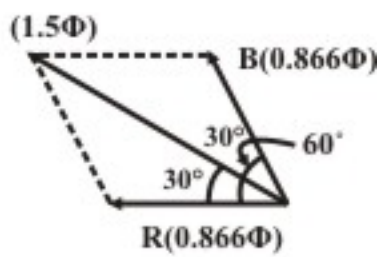

Fig. 29.4(b)(ii)

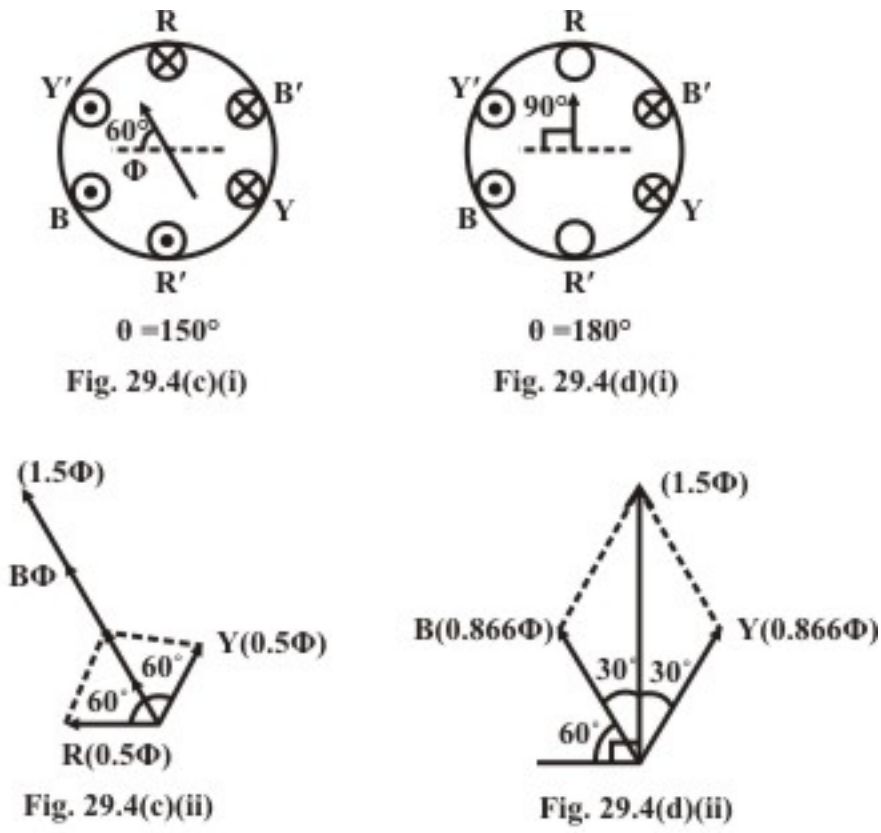

Fig. 29.4: (i) The currents in the three-phase balanced windings and (ii) The location (position) of the axis of resultant flux (or mmf), with the change in time (θ = ωt).

A study of the above shows that, as we move from $t_1(\theta_1 = 90°)$ to t_4 $(\theta_4 = 180°)$ along the voltage waveforms (Fig. 29.3), the magnitude of the resultant flux remains constant at the value $(1.5 \cdot \Phi)$ as shown in Fig. 29.4(ii)-(a-d). If another point, say t_5 $(\theta_5 = 210°)$ is taken, it can be easily shown that the magnitude of the resultant flux at that instant remains same at $(1.5 \cdot \Phi)$, which value is obtained mathematically earlier. If any other arbitrary point, t (θ) on the waveform is taken, the magnitude of the resultant flux at that instant remains same at $(1.5 \cdot \Phi)$. Also, it is seen that the axis of the resultant flux moves through $90°$, as the angle, θ changes from $90°$ to $180°$, i.e. by the same angle of $90°$. So, if we move through one cycle of the waveform, by $360°$ (electrical), the axis of the resultant flux also moves through $360°$ (2-pole stator), i.e. one complete revolution. The rotating magnetic field moves in the clockwise direction as shown, from phase R to phase Y. Please note that, for 2-pole configuration as in this case, the mechanical and electrical angles are same. So, the speed of the rotating magnetic field for this case is 50 rev/sec (rps), or 3,000 rev/min (rpm), as the supply frequency is 50 Hz or c/s, with its magnitude, i.e. resultant, remaining same.

Four-Pole Stator

A 4-pole stator with balanced three-phase winding (Fig. 29.5) is taken as an example. The winding of each phase (one part only), say for example, ($R_1 - R_1'$) is assumed to be concentrated in one slot each, both for forward and return conductors, with required no. as needed. Same is the case for other two phases. The connection of two parts of the winding in R-phase, is also shown in the same figure. The windings for each of three phases are in two parts, with the mechanical angle between the start of adjacent windings being $60°$ only, whereas the electrical angle remaining same at $120°$. As two pairs of poles are there, electrically two cycles, i.e. $720°$ are there for one complete revolution, with each N-S pair for one cycle of $360°$, but the mechanical angle is only $360°$. If we move through one cycle of the waveform, by $360°$ (electrical), the axis of the resultant flux in this case moves through a mechanical angle of $180°$, i.e. one pole pair ($360°$- elec.), or half revolution only. As stated earlier, for the resultant flux axis to make one complete revolution ($360°$- mech.), two cycles of the waveform ($720°$- elec.), are required, as No. of poles (p) is four (4). So, for the supply frequency of f = 50 Hz (c/s), the speed of the rotating magnetic field is given by,

$n_s = (2 \cdot f)/p = f/(p/2) = 50/(4/2) = 25$ rev/sec (rps), or $N_s = 1{,}500$ rev/min (rpm).

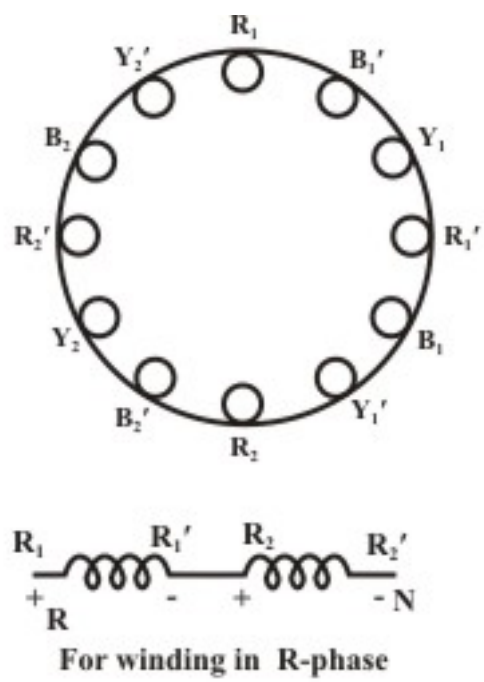

Fig. 29.5: Three-phase balanced windings in a 4-pole stator.

The relation between the synchronous speed, i.e. the speed of the rotating magnetic field, in rpm and the supply frequency in Hz, is given by

$N_s = (60 \times 2 \cdot f)/p = (120 \cdot f)/p$

To take another example of a 6-pole stator, in which, for 50 Hz supply, the synchronous speed is 1,000 rpm, obtained by using the above formula.

The Reversal of Direction of Rotating Magnetic Field

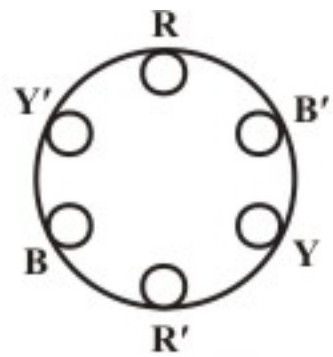

Fig. 29.6: Three-phase windings for Induction motor.

The direction of the rotating magnetic field is reversed by changing the phase sequence to R-B-Y, i.e. changing only the connection of any two of the three phases, and keeping the third one same. The schematic of the balanced three-phase winding for a 2-pole stator, with the winding of each phase assumed to be concentrated in one slot, is redrawn in Fig. 29.6, which is same as shown in Fig. 29.4(i) (a-d). The space phase between the adjacent windings of any two phases (say R & Y, or R & B) is $120°$, i.e. $2\pi/3$ rad (elect.), as a 2-pole stator is assumed. Also, it may be noted that, while the connection to phase R remains same, but the phases, Y and B of the winding are now connected to the phases, B and Y of the supply respectively. The waveforms for the above phase sequence (R-B-Y) are shown in Fig. 29.7. Please note that, the voltage in phase R leads the voltage in phase B, and the voltage in phase B leads the voltage in phase Y. As compared to the three waveforms shown in Fig. 29.3, the two waveforms of the phases Y & B change, while the reference phase R remains same, with the phase sequence reversed as given earlier. The currents in three phases of the stator winding are

$$i_R = I_m \cos\omega t$$

$$i_Y = I_m \cos(\omega t + 120°)$$

$$i_B = I_m \cos(\omega t - 120°) = I_m \cos(\omega t + 240°)$$

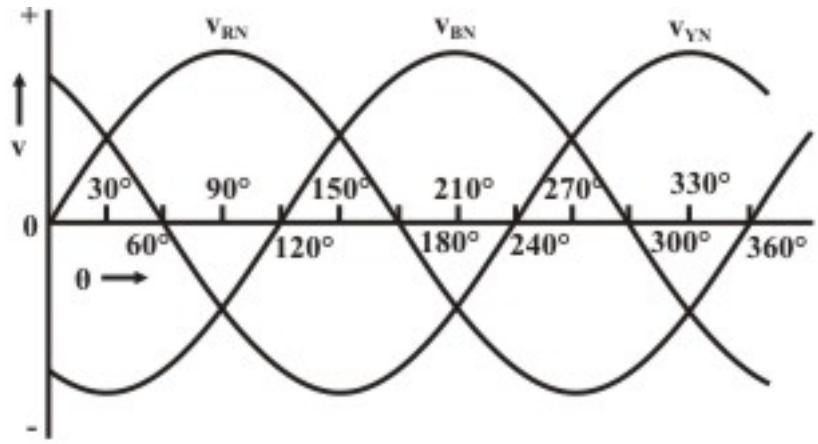

Fig. 29.7: Three phase voltage waveforms with phase sequence R-B-Y.

Without going into the details of the derivation, which has been presented in detail earlier, the resultant mmf wave is obtained as

$$F(\theta, t) = F_R + F_Y + F_B$$

$$= F_m \left[\cos \omega t \cos \theta + \cos (\omega t + 120°) \cos (\theta - 120°) + \cos (\omega t - 120°) \cos (\theta + 120°)\right]$$

As shown earlier, the first term of this expression is

$$\cos \omega t \cos \theta = 0.5 \left[\cos(\theta + \omega t) + \cos (\theta - \omega t)\right]$$

The second term is

$$\cos (\omega t + 120°) \cos (\theta - 120°) = 0.5 \left[\cos(\theta + \omega t) + \cos(\theta - \omega t - 240°)\right]$$

Similarly, the third term can be rewritten in the form shown.

The expression is

$$F(\theta, t) = 1.5\, F_m \cos(\theta + \omega t)$$

$$+ 0.5\, F_m \left[\cos(\theta - \omega t) + \cos(\theta - \omega t - 240°) + \cos(\theta - \omega t + 240°)\right]$$

As shown or derived earlier, the expression, after simplification, is

$$F(\theta, t) = 1.5\, F_m \cos(\theta + \omega t)$$

Note that the second part of the expression within square bracket is zero.

It can be shown that the rotating magnetic field now moves in the reverse (i.e., anticlockwise) direction (Fig. 29.6), from phase R to phase B (lagging phase R by 120°), which is the reverse of earlier (clockwise) direction as shown in Fig. 29.4(i), as the phase sequence is reversed. This is also shown in the final expression of the resultant mmf wave, as compared to the one derived earlier. Alternatively, the reversal of direction of the rotating magnetic field can be derived by the procedure followed in the second method as given earlier.

In this lesson – the first one of this module, it has been shown that, if balanced three-phase voltage is supplied to balanced three-phase windings in the stator of an Induction motor, the resultant flux remains constant in magnitude, but rotates at the synchronous speed, which is related to the supply frequency and No. of poles, for which the winding (stator) has been designed. This is termed as rotating magnetic field formed in the air gap of the motor. The construction of three-phase induction motor (mainly two types of rotor used) will be described, in brief, in the next lesson, followed by the principle of operation.

Module 8

Three-phase Induction Motor

Lesson 30

Construction and Principle of Operation of IM

In the previous, i.e. first, lesson of this module, the formation of rotating magnetic field in the air gap of an induction motor (IM), has been described, when the three-phase balanced winding of the stator is supplied with three-phase balanced voltage. The construction of the stator and two types of rotor − squirrel cage and wound (slip-ring) one, used for three-phase Induction motor will be presented. Also described is the principle of operation, i.e. how the torque is produced.

Keywords: Three-phase induction motor, cage and wound (slip-ring) rotor, synchronous and rotor speed, slip, induced voltages in stator winding and rotor bar/winding.

After going through this lesson, the students will be able to answer the following questions:

1. How would you identify the two types (cage and wound, or slip-ring) of rotors in three-phase induction motor?
2. What are the merits and demerits of the two types (cage and wound, or slip-ring) of rotors in IM?
3. How is the torque produced in the rotor of the three-phase induction motor?
4. How does the rotor speed differ from synchronous speed? Also what is meant by the term 'slip'?

Construction of Three-phase Induction Motor

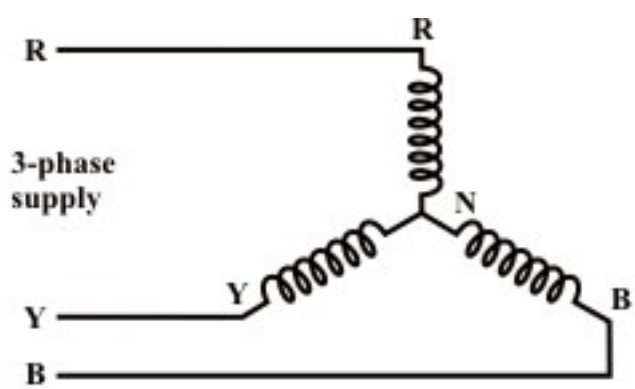

Fig. 30.1: Schematic diagram of the stator windings in a three-phase induction motor.

This is a rotating machine, unlike the transformer, described in the previous module, which is a static machine. Both the machines operate on ac supply. This machine mainly works as a motor, but it can also be run as a generator, which is not much used. Like all rotating machines, it consists of two parts − stator and rotor. In the stator (Fig. 30.1), the winding used is a balanced three-phase one, which means that the number of turns in each phase, connected in star/delta, is equal. The windings of the three phases are placed 120° (electrical) apart, the mechanical angle between the adjacent phases being $[(2\times120°)/p]$, where p is no. of poles. For a 4-pole (p = 4) stator, the mechanical angle

between the winding of the adjacent phases, is $[(2\times120°)/4]=120°/2=60°$, as shown in Fig. 29.4. The conductors, mostly multi-turn, are placed in the slots, which may be closed, or semi-closed, to keep the leakage inductance low. The start and return parts of the winding are placed nearly $180°$, or $(180°-\beta)$ apart. The angle of short chording (β) is nearly equal to $30°$, or close to that value. The short chording results in reducing the amount of copper used for the winding, as the length of the conductor needed for overhang part is reduced. There are also other advantages. The section of the stampings used for both stator and rotor, is shown in Fig. 30.2. The core is needed below the teeth to reduce the reluctance of the magnetic path, which carries the flux in the motor (machine). The stator is kept normally inside a support.

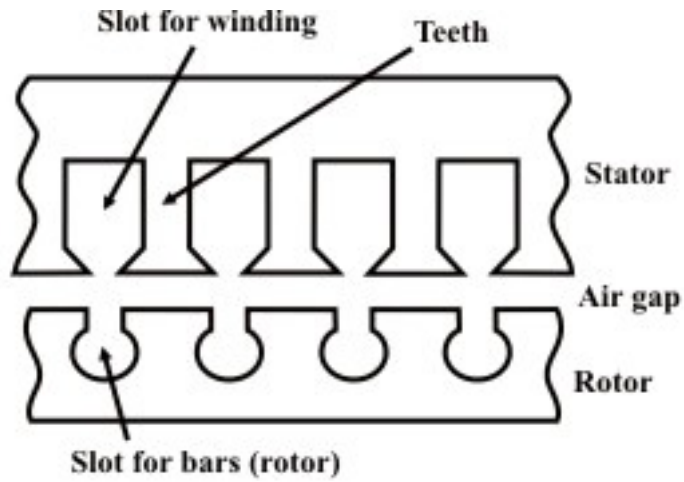

Fig. 30.2: Section for stamping of stator and rotor in IM (not to scale).

There are two types of rotor used in IM, viz. squirrel cage and wound (slip-ring) one. The cage rotor (Fig. 30.3a) is mainly used, as it is cheap, rugged and needs little or no maintainance. It consists of copper bars placed in the slots of the rotor, short circuited at the two ends by end rings, brazed with the bars. This type of rotor is equivalent to a wound (slip-ring) one, with the advantage that this may be used for the stator with different no. of poles. The currents in the bars of a cage rotor, inserted inside the stator, follow the pattern of currents in the stator winding, when the motor (IM) develops torque, such that no. of poles in the rotor is same as that in the stator. If the stator winding of IM is changed, with no. of poles for the new one being different from the earlier one, the cage rotor used need not be changed, thus, can be same, as the current pattern in the rotor bars changes. But the no. of poles in the rotor due to the above currents in the bars is same as no. of poles in the new stator winding. The only problem here is that the equivalent resistance of the rotor is constant. So, at the design stage, the value is so chosen, so as to obtain a certain value of the starting torque, and also the slip at full load torque is kept within limits as needed.

The other type of rotor, i.e., a wound rotor (slip ring) used has a balanced three-phase winding (Fig. 30.3b), being same as the stator winding, but no. of turns used depends on the voltage in the rotor. The three ends of the winding are brought at the three slip-rings, at which points external resistance can be inserted to increase the starting torque requirement. Other three ends are shorted inside. The motor with additional starting

resistance is costlier, as this type of rotor is itself costlier than the cage rotor of same power rating, and additional cost of the starting resistance is incurred to increase the starting torque as required. But the slip at full load torque is lower than that of a cage rotor with identical rating, when no additional resistance is used, with direct short-circuiting at the three slip-ring terminals. In both types of rotor, below the teeth, in which bars of a cage rotor, or the conductors of the rotor winding, are placed, lies the iron core, which carries the flux as is the case of the core in the stator. The shaft of the rotor passes below the rotor core. For large diameter of the rotor, a spider is used between the rotor core and the shaft. For a wound (slip-ring) rotor, the rotor winding must be designed for same no. of poles as used for the stator winding. If the no. of poles in the rotor winding is different from no. of poles in the stator winding, no torque will be developed in the motor. It may be noted that this was not the case with cage rotor, as explained earlier.

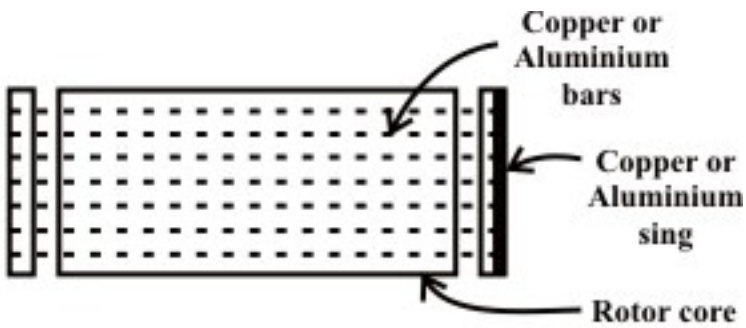

Fig. 30.3(a): Squirrel cage rotor of induction motor

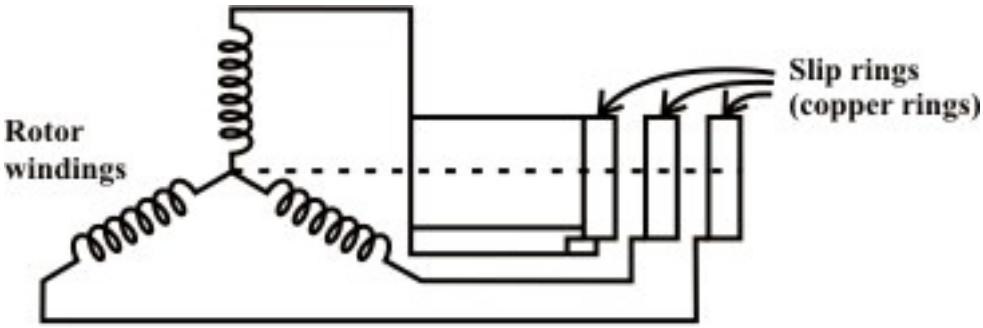

Fig. 30.3(b): Wound rotor (slip ring) of induction motor

The wound rotor (slip ring) shown in Fig. 30.3 (b) is shown as star-connected, whereas the rotor windings can also be connected in delta, which can be converted into its equivalent star configuration. This shows that the rotor need not always be connected in star as shown. The No. of rotor turns changes, as the delta-connected rotor is converted into star-connected equivalent. This point may be kept in mind, while deriving the equivalent circuit as shown in the next lesson (#31), if the additional resistance (being in star) is connected through the slip rings, in series with the rotor winding

Principle of Operation

The balanced three-phase winding of the stator is supplied with a balanced three-phase voltage. As shown in the previous lesson (#29), the current in the stator winding produces a rotating magnetic field, the magnitude of which remains constant. The axis of the magnetic field rotates at a synchronous speed ($n_s = (2 \cdot f)/p$), a function of the supply frequency (f), and number of poles (p) in the stator winding. The magnetic flux lines in the air gap cut both stator and rotor (being stationary, as the motor speed is zero) conductors at the same speed. The emfs in both stator and rotor conductors are induced at the same frequency, i.e. line or supply frequency, with No. of poles for both stator and rotor windings (assuming wound one) being same. The stator conductors are always stationary, with the frequency in the stator winding being same as line frequency. As the rotor winding is short-circuited at the slip-rings, current flows in the rotor windings. The electromagnetic torque in the motor is in the same direction as that of the rotating magnetic field, due to the interaction between the rotating flux produced in the air gap by the current in the stator winding, and the current in the rotor winding. This is as per Lenz's law, as the developed torque is in such direction that it will oppose the cause, which results in the current flowing in the rotor winding. This is irrespective of the rotor type used − cage or wound one, with the cage rotor, with the bars short-circuited by two end-rings, is considered equivalent to a wound one The current in the rotor bars interacts with the air-gap flux to develop the torque, irrespective of the no. of poles for which the winding in the stator is designed. Thus, the cage rotor may be termed as universal one. The induced emf and the current in the rotor are due to the relative velocity between the rotor conductors and the rotating flux in the air-gap, which is maximum, when the rotor is stationary ($n_r = 0.0$). As the rotor starts rotating in the same direction, as that of the rotating magnetic field due to production of the torque as stated earlier, the relative velocity decreases, along with lower values of induced emf and current in the rotor. If the rotor speed is equal that of the rotating magnetic field, which is termed as synchronous speed, and also in the same direction, the relative velocity is <u>zero</u>, which causes both the induced emf and current in the rotor to be reduced to zero. Under this condition, torque will <u>not</u> be produced. So, for production of positive (motoring) torque, the rotor speed must always be lower than the synchronous speed. The rotor speed is never equal to the synchronous speed in an IM. The rotor speed is determined by the mechanical load on the shaft and the total rotor losses, mainly comprising of copper loss.

The difference between the synchronous speed and rotor speed, expressed as a ratio of the synchronous speed, is termed as 'slip' in an IM. So, slip (s) in pu is

$$s = \frac{n_s - n_r}{n_s} = 1 - \frac{n_r}{n_s} \qquad \text{or,} \quad n_r = (1-s) \cdot n_s$$

where, n_s and n_r are synchronous and rotor speeds in rev/s.

In terms of $N_s = 60 \times n_s$ and $N_r = 60 \times n_r$, both in rev/min (rpm), slip is

$$s = (N_s - N_r)/N_s$$

If the slip is expressed in %, then $s = [(N_s - N_r)/N_s] \times 100$

Normally, for torques varying from no-load (≈ zero) to full load value, the slip is proportional to torque. The slip at full load is 4-5% (0.04-0.05).

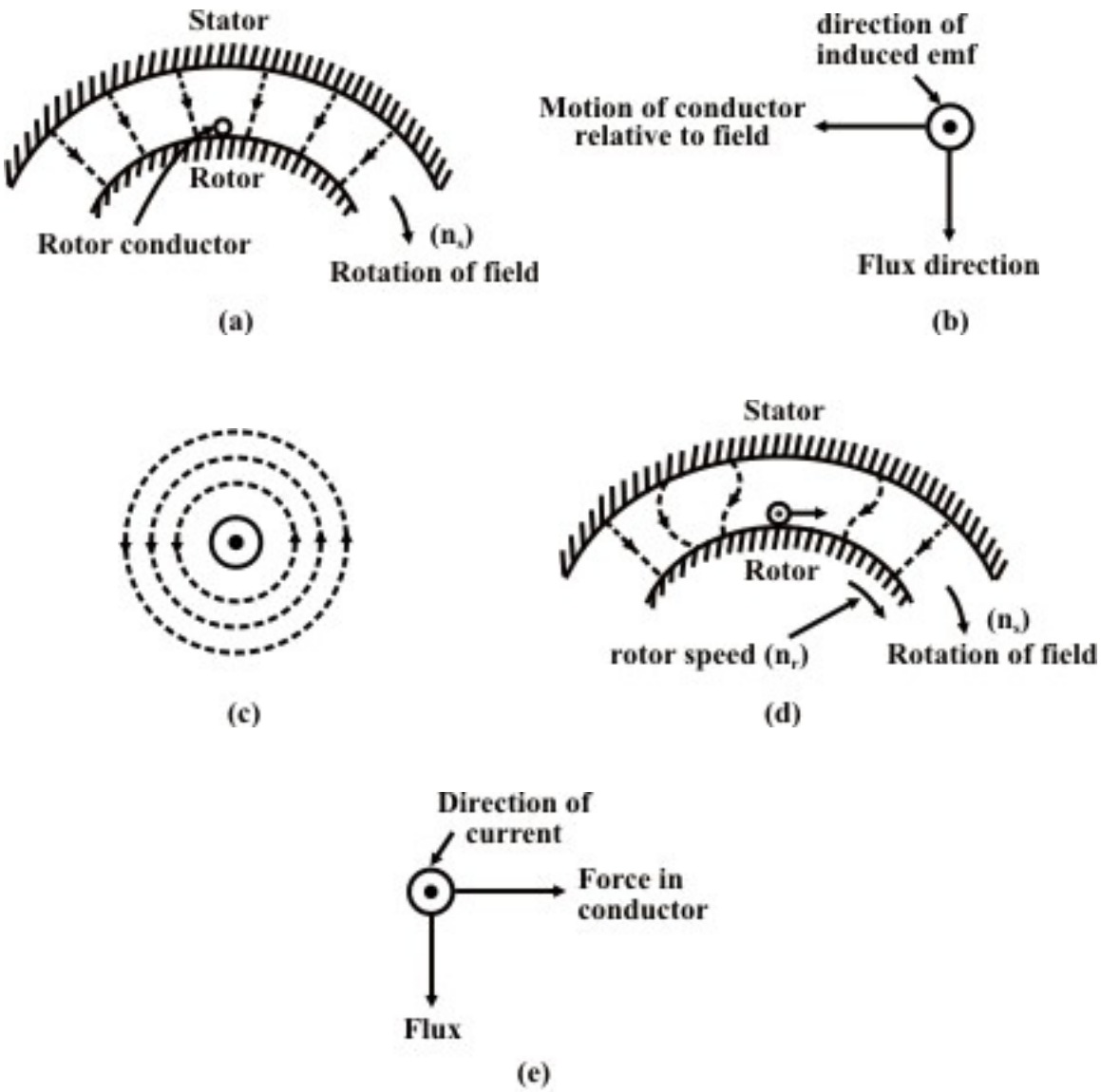

Fig. 30.4: Production of torque

An alternative explanation for the production of torque in a three-phase induction motor is given here, using two rules (right hand and left hand) of Fleming. The stator and rotor, along with air-gap, is shown in Fig. 30.4a. Both stator and rotor is shown there as surfaces, but without the slots as given in Fig, 30.2. Also shown is the path of the flux in the air gap. This is for a section, which is under North pole, as the flux lines move from stator to rotor. The rotor conductor shown in the figure is at rest, i.e., zero speed (stand-still). The rotating magnetic field moves past the conductor at synchronous speed in the clockwise direction. Thus, there is relative movement between the flux and the rotor conductor. Now, if the magnetic field, which is rotating, is assumed to be at standstill as shown in Fig. 30.4b, the conductor will move in the direction shown. So, an emf is induced in the rotor conductor as per Faraday's law, due to change in flux linkage. The direction of the induced emf as shown in the figure can be determined using Fleming's right hand rule.

As described earlier, the rotor bars in the cage rotor are short circuited via end rings. Similarly, in the wound rotor, the rotor windings are normally short-circuited externally via the slip rings. In both cases, as emf is induced in the rotor conductor (bar), current flows there, as it is short circuited. The flux in the air gap, due to the current in the rotor conductor is shown in Fig. 30.4c. The flux pattern in the air gap, due to the magnetic fields produced by the stator windings and the current carrying rotor conductor, is shown in Fig. 304d. The flux lines bend as shown there. The property of the flux lines is to travel via shortest path as shown in Fig. 30.4a. If the flux lines try to move to form straight line, then the rotor conductor has to move in the direction of the rotating magnetic field, but not at the same speed, as explained earlier. The current carrying rotor conductor and the direction of flux are shown in Fig. 30.4e. It is known that force is produced on the conductor carrying current, when it is placed in a magnetic field. The direction of the force on the rotor conductor is obtained by using Fleming's left hand rule, being same as that of the rotating magnetic field. Thus, the rotor experiences a motoring torque in the same direction as that of the rotating magnetic field. This briefly describes how torque is produced in a three-phase induction motor.

The frequency of the induced emf and current in the rotor

As given earlier, both the induced emf and the current in the rotor are due to the relative velocity between the rotor conductors and the rotating flux in the air-gap, the speed of which is the synchronous speed ($N_s = (120 \times f)/p$). The rotor speed is

$$N_r = (1-s) \cdot N_s$$

The frequency of the induced emf and current in the rotor is

$$f_r = p \cdot (n_s - n_r) = s \cdot (p \cdot n_s) = s \cdot f$$

For normal values of slip, the above frequency is small. Taking an example, with full load slip as 4% (0.04), and supply (line) frequency as 50 Hz, the frequency (Hz) of the rotor induced emf and current, is $f_r = 0.04 \times 50.0 = 2.0$, which is very small, whereas the frequency (f) of the stator induced emf and current is 50 Hz, i.e. line frequency. At standstill, i.e. rotor stationary ($n_r = 0.0$), the rotor frequency is same as line frequency, as shown earlier, with slip [s = 1.0 (100%)]. The reader is requested to read the next lesson (#31), where some additional points are included in this matter. Also to note that the problems are given there (#31).

In this lesson – the second one of this module, the construction of a three-phase Induction Motor has been presented in brief. Two types of rotor – squirrel cage and wound (slip-ring) ones, along with the stator part, are described. Then, the production of torque in IM, when the balanced stator winding is fed from balanced three-phase voltage, with the balanced rotor winding in a wound one being short-circuited, is taken up. In the next lesson, the equivalent circuit per phase of IM will be derived first. Then, the complete power flow diagram is presented.

Module 8

Three-phase Induction Motor

Lesson 31

Equivalent Circuit and Power Flow Diagram of IM

Instructional Objectives

- determine the induced emfs, and the currents, per phase in the stator and rotor windings,
- find the relation between the rotor input, rotor copper loss and rotor output, in terms of slip,
- calculate the various losses – iron, copper and mechanical, in an IM, and
- find where do the losses occur.

Introduction

In the previous, i.e. second, lesson of this module, the construction (the stator and two types of rotor − squirrel cage and wound (slip-ring) one), of the three-phase induction motor (IM), has been described. Then, the principle of operation, i.e. production of torque, with the stator supplied from balanced three-phase supply and the rotor winding terminals short-circuited, is discussed. In this lesson, the equivalent circuit per phase of IM will be derived first, to be followed by the presentation of power flow diagram, wherein the various losses, and also where do they occur, are described.

Keywords: The induced voltages (emfs) in stator winding and rotor bar/winding, the equivalent circuit per phase of IM, the fictitious resistance in the circuit, input power to stator and rotor, losses – iron loss, stator and rotor copper loss, mechanical losses, output power.

The induced emf per phase, in the motor windings

The induced emf per phase in the stator winding is nearly equal to the input voltage per phase, and is given by

$$V_s \approx E_s = 2.22 \cdot k_{ws} \cdot f \cdot \phi \cdot Z_s = 4.44 \cdot k_{ws} \cdot f \cdot \phi \cdot T_s$$

where,

V_s = Input voltage (V) per phase, to the stator winding

E_s = Induced emf (V) per phase, in the stator winding

ϕ = Flux (Wb) per pole

f = Frequency (Hz or c/s) of the input voltage

$Z_s = 2 \cdot T_s$ = No. of stator conductors in series per phase

T_s = No. of stator turns or coils in series per phase

$k_{ws} = k_{ds} \cdot k_{ps}$ = Stator winding factor

k_{ds} = Distribution factor of stator winding

k_{ps} = Pitch factor of stator winding

The above formula, not derived here, is a standard one available in any textbook. It is similar to the formula for the induced emf in a transformer, derived in the earlier module. As the winding in this case is stationary, with the rotating magnetic field rotating at a

speed of $n_s = f/(p/2) = (2 \cdot f)/p$ (also termed as the synchronous speed), the frequency of the induced emf in the stator winding is same as that of input frequency ($f = (p/2) \cdot n_s$), where,

n_s = Speed of the rotating magnetic field (rev/sec)

p = No. of poles for which the stator winding of IM is designed

The induced emf per phase at standstill ($\omega_r = 0.0$, or $s = 1.0$) in the rotor winding (assuming a wound or slip-ring one), is given by

$$E_r = 2.22 \cdot k_{wr} \cdot f_r \cdot \phi \cdot Z_r = 4.44 \cdot k_{wr} \cdot f_r \cdot \phi \cdot T_r$$

where,

E_r = Induced emf (V) per phase, in the rotor winding at standstill ($s = 1.0$)

$f_r = s \cdot f = f$ = Frequency (Hz) in the rotor winding at standstill ($s = 1.0$)

$Z_r = 2 \cdot T_r$ = No. of rotor conductors in series per phase

T_r = No. of rotor turns or coils in series per phase

$k_{wr} = k_{dr} \cdot k_{pr}$ = Rotor winding factor

k_{dr} = Distribution factor of rotor winding

k_{pr} = Pitch factor of rotor winding

It may be noted for the wound rotor, the number of poles in the rotor winding must be the same as those in the stator winding, which has been explained in the previous lesson (#30). The squirrel cage rotor can be considered as equivalent to a wound one.

The frequency of the induced emf in the rotor winding with the rotor rotating at any speed, is proportional to the relative speed between the speed of the rotating magnetic field, and that of the rotor, and is given by

$$f_r = (p/2) \cdot (n_s - n_r) = (p/2) \cdot s \cdot n_s = s \cdot f$$

where,

$n_r = (1 - s) \cdot n_s$ = Speed of the rotor (rev/sec)

$s = (n_s - n_r)/n_s = 1 - (n_r/n_s)$ = slip in IM

The ratio of the induced emf's per phase, in the stator and rotor windings, with the rotor at standstill, is given by,

$$E_s / E_r \approx T_s / T_r = Z_s / Z_r$$

assuming that the winding factor in both windings are same. It may be noted that the induced voltage per phase in the winding is proportional to the effective turns per phase, of the winding ($= k_w \cdot T$). The formula is similar to that obtained in a transformer, where the induced voltage per turn ($E_t = E/T$) is the same in the two (primary/secondary) windings.

The induced emf in the rotor winding with the motor running at any speed is proportional to the rotor frequency ($f_r = s \cdot f$), and is given by

$$s \cdot E_r = 2.22 \cdot k_{wr} \cdot s \cdot f \cdot \phi \cdot Z_r$$

The currents in the balanced three-phase windings of the stator produce a resultant mmf, rotating at the synchronous speed (n_s) relative to stator conductors, which is stationary. Similarly, the currents in the balanced three-phase windings of the rotor (taken

as a wound one) produce another resultant mmf, rotating at the speed of ($n_s - n_r = s \cdot n_s$) relative to rotor conductors in the same direction as that of the rotor, which rotates at a speed ($n_r = (1-s) \cdot n_s$). Hence, the speed of the resultant rotor mmf relative to stator conductors is ($s \cdot n_s + n_r = n_s$). The axes of the resultant rotor mmf rotate at the same speed as those of the resultant stator mmf, so that the mmfs are stationary relative to each other.

The equivalent circuit per phase, of the rotor

The current per phase in the rotor winding (Fig. 31.1a) is given by

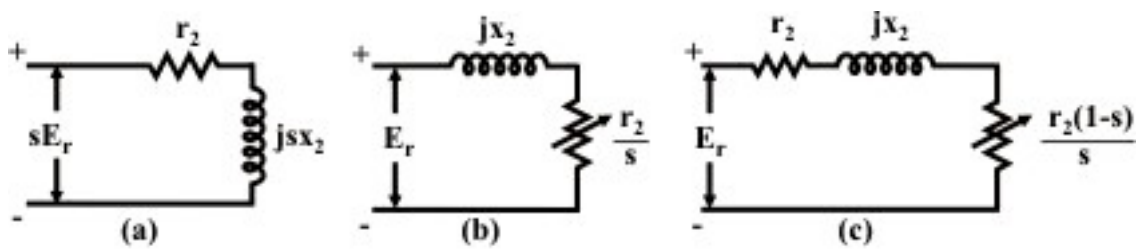

Fig. 31.1: Equivalent circuit of the rotor winding (IM)

$$I_2 = \frac{s \cdot E_r}{\sqrt{(r_2)^2 + (s \cdot x_2)^2}}$$

where,

r_2 = Resistance (Ω) per phase, of the rotor winding

$x_2 = 2 \cdot \pi \cdot f \cdot l_2$ = Leakage reactance (Ω) per phase, of the rotor winding at standstill ($s = 1.0$ or $\omega_r = 0.0$)

The leakage reactance per phase of the rotor winding at any other speed n_r, is proportional to the rotor frequency ($f_r = s \cdot f$), and is given by $x_{2s} = s \cdot x_2$. The term in the denominator of the expression is the magnitude of the rotor impedance per phase at any other speed, which is ($|z_{2s}| = \sqrt{(r_2)^2 + (s \cdot x_2)^2}$), with its phase angle as $\phi_{2s} = \tan^{-1}[(s \cdot x_2)/r_2]$. It may be noted that the subscript '2' is used here, instead of 'r' earlier. Similarly, the subscript '1' may be used, instead of 's', i.e. stator.

In the expression for the rotor current per phase, if both numerator and denominator is divided by the term s, I_2 is

$$I_2 = \frac{E_r}{\sqrt{(r_2/s)^2 + (x_2)^2}}$$

The circuit of the rotor (Fig. 31.1a) can now be drawn as shown in Fig. 31.1b, from the equation given earlier. It may be noted here the input voltage per phase to the circuit is constant, i.e. E_r and the leakage reactance per phase is also constant, x_2, both being same as at standstill, with the rotor frequency being same as line or input frequency. Also the phase angle of the impedance, whose magnitude is the term in the denominator, remains same as $\phi_{2s} = \tan^{-1}[x_2/(r_2/s)] = \tan^{-1}[(s \cdot x_2)/r_2]$, as obtained earlier.

The circuit of Fig. 31.1b can be redrawn as shown in Fig. 31.1c, with the resistance (r_2/s) now being shown as sum of two resistances, rotor resistance, r_2 and fictitious resistance, $((r_2/s)-r_2 = r_2(1-s)/s)$. The first part of the circuit consists of the rotor impedance at standstill, which is $(z_2 \angle\phi_2 = r_2 + j\,x_2)$, whose magnitude and phase angle are $|z_2| = \sqrt{(r_2)^2 + (x_2)^2}$ and $\phi_2 = \tan^{-1}(x_2/r_2)$ respectively.

The relation between rotor input, rotor copper loss and rotor output

From the equivalent circuit (Fig. 31.1c) per phase of the rotor winding, the total input (W) to the rotor is $P_i = 3\cdot E_r \cdot I_2 \cdot \cos\phi_{2s} = 3\cdot(I_2)^2\cdot(r_2/s)$. Please note that the phase angle, ϕ_{2s} is the angle between the induced voltage and current (both in the rotor). The total input to the rotor is the power transferred from the stator via air gap. The total copper loss in the rotor winding is $3\cdot(I_2)^2\cdot r_2$. The total output of the rotor is the total power loss in the fictitious resistance, $r_2(1-s)/s$ of the rotor circuit (Fig, 31.1c), and is given by $3\cdot(I_2)^2\cdot r_2\cdot(1-s)/s$. The total rotor output is obtained also as the difference of the total rotor input and the total rotor copper loss. Alternatively,

Total input to the rotor = Total rotor copper loss + Total rotor output

It may be shown that

Total rotor copper loss = $s\times$ Total rotor input,

or, Total rotor input = $(1/s)\times$ Total rotor copper loss

In terms of total rotor output, the relationships are as follows,

Total rotor copper loss = $[s/(1-s)]\times$ Total rotor output,

or, Total rotor output = $\{(1-s)/s]\times$ Total rotor copper loss

The relation between total rotor output and total rotor input is

Total rotor output = $(1-s)\times$ Total rotor input

or, Total rotor input = $[1/(1-s)]\times$ Total rotor output

In the above discussion, total rotor output is the output in electrical terms, also termed as gross one, which includes mechanical, or friction and windage losses.

The expression for gross power and torque developed, and the torque-speed or torque-slip characteristics of Induction motor along with other relevant points, will be presented in the next lesson.

Power flow diagram

In the induction motor, efficiency is

$$\text{Efficiency } (\eta) = \frac{Output}{Input} = \frac{Output}{Output + losses}$$

as Input = output + losses

The total losses are losses in both stator and rotor, and mechanical losses. The stator losses are iron or core loss and copper loss, i.e. loss in the stator winding resistance. The core loss is the sum of hysteresis and eddy current losses, with the frequency in the stator

being line frequency of 50 Hz. Both the above losses are related to frequency. It may be noted here that the flux in the air gap is rated, as the input or supply voltage fed to the stator winding is rated with the frequency is also rated. The copper loss is proportional to the square of the current in the stator winding. The loss in the rotor is only copper loss as shown earlier, with the iron loss being low due to low frequency in the rotor core. For example, the rotor frequency ($f_r = s\,f$) is only 2 Hz, if the slip is assumed as 4%, the speed being 1,440 rpm for a 4-pole motor. The line (input) frequency is 50 Hz. The iron loss is related to the frequency as stated earlier. The net output available at the shaft is the gross output minus the mechanical losses.

Before coming to the power flow diagram in an Induction motor, total input power fed to the motor via stator (winding) is $P_i = 3\,V\,I\cos\phi_i = 3\,V\,I\cos(V, I)$

where, V and I are the input voltage and current per phase, to the motor.

Total input power to the motor (stator) = Stator losses (iron & copper) + Total input power to the rotor (or Power transferred via air gap)

Total input power to the rotor = Rotor copper loss + Total output power (gross)

Total output power (gross) = Mechanical losses + Total output power (net) [or Power available at the shaft]

It may be noted that all the losses, excluding mechanical one, are total for all three phases, and as given earlier, iron losses in the rotor are very low..

In this lesson – the third one of this module, the equivalent circuit per phase of an IM has been derived, starting with the formula for the induced emfs per phase, in both stator and rotor windings. The various losses and where do they occur, are described next, followed by presentation of power flow diagram for IM. In the next lesson as given earlier, the expression for gross power or torque developed, and the torque-speed or torque-slip characteristics of an IM, along with other relevant points, will be presented in detail.

Module 8

Three-phase Induction Motor

Lesson 32

Torque-Slip (speed) Characteristics of Induction Motor (IM)

Instructional Objectives

- Derivation of the expression for the gross torque developed as a function of slip (speed) of Induction motor
- Sketch the above characteristics of torque-slip (speed), explaining the various features
- Derive the expression of maximum torque and the slip (speed) at which it occurs
- Draw the above characteristics with the variation in input (stator) voltage and rotor resistance

Introduction

In the previous, i.e. third, lesson of this module, starting with the formulas for the induced emfs per phase in both stator and rotor windings, the equivalent circuit per phase of the three-phase induction motor (IM), has been derived. The relation between the rotor input, rotor copper loss and rotor output (gross) are derived next. Finally, the various losses − copper losses (stator/rotor), iron loss (stator) and mechanical loss, including the determination of efficiency, and also power flow diagram, are presented. In this lesson, firstly, the torque-slip (speed) characteristics of IM, i.e., the expression of the gross torque developed as a function of slip, will be derived. This is followed by the sketch of the different characteristics, with the variations in input (stator) voltage and rotor resistance, along with the features. Lastly, the expression of maximum torque developed and the slip (speed) at which it occurs, are derived.

Keywords: The equivalent circuit per phase of IM, gross torque developed, torque-slip (speed) characteristics, maximum torque, slip at maximum torque, variation of the characteristics with changes in input (stator) voltage and rotor resistance.

Gross Torque Developed

The current per phase in the rotor winding (the equivalent circuit of the rotor, per phase is shown in Fig. 31.1) is (as given in earlier lesson (#31))

$$I_2 = \frac{s \cdot E_r}{\sqrt{(r_2)^2 + (s \cdot x_2)^2}} = \frac{E_r}{\sqrt{(r_2/s)^2 + (x_2)^2}}$$

Please note that the symbols used are same as given in the earlier lesson.

In a similar way, the output power (gross) developed (W) is the loss in the fictitious resistance in the equivalent circuit as shown earlier, which is

$$P_0 = 3 \cdot (I_2)^2 \cdot [r_2(1-s)/s] = \frac{3 \cdot (s \cdot E_r)^2 \cdot [r_2(1-s)/s]}{[(r_2)^2 + (s \cdot x_2)^2]} = \frac{3 \cdot (E_r)^2 \cdot r_2 \cdot s(1-s)}{[(r_2)^2 + (s \cdot x_2)^2]}$$

The motor speed in rps is $n_r = (1-s) \cdot n_s$

The motor speed (angular) in rad/s is $\omega_r = (1-s) \cdot \omega_s$

The gross torque developed in $N \cdot m$ is

$$T_0 = \frac{P_0}{\omega_r} = \frac{3\cdot(E_r)^2\cdot r_2\cdot s(1-s)}{(1-s)\,\omega_s\left[(r_2)^2+(s\cdot x_2)^2\right]} = \frac{3\cdot(E_r)^2\cdot r_2\cdot s}{2\pi\, n_s\left[(r_2)^2+(s\cdot x_2)^2\right]}$$

The synchronous speed (angular) is $\omega_s = 2\pi\cdot n_s$

The input power to the rotor (or the power transferred from the stator via air gap) is the loss in the total resistance (r_2/s), which is

$$P_i = 3\cdot(I_2)^2\cdot(r_2/s) = \frac{3\cdot(s\cdot E_r)^2\cdot(r_2/s)}{\left[(r_2)^2+(s\cdot x_2)^2\right]} = \frac{3\cdot(E_r)^2\cdot r_2\cdot s}{\left[(r_2)^2+(s\cdot x_2)^2\right]}$$

The relationship between the input power and the gross torque developed is $P_i = \omega_s\cdot T_0$

So, the input power is also called as torque in synchronous watts, or the torque is $T_0 = P_i/\omega_s$

Torque-slip (speed) Characteristics

The torque-slip or torque-speed characteristic, as per the equation derived earlier, is shown in Fig. 32.1. The slip is $s = (\omega_s - \omega_r)/\omega_s = (n_s - n_r)/n_s = 1-(n_r/n_s)$. The range of speed, n_r is between 0.0 (standstill) and n_s (synchronous speed). The range of slip is between 0.0 ($n_r = n_s$) and 1.0 ($n_r = 0.0$).

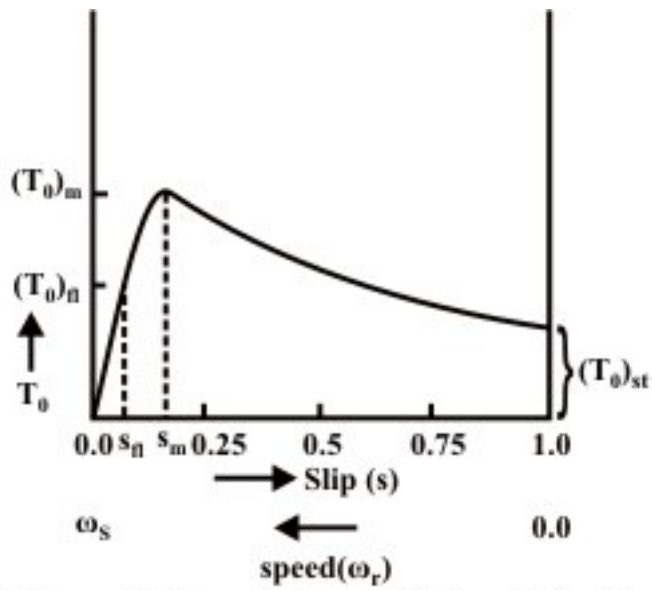

Fig. 32.1: Terque-slip(speed) characteristics of Induction Motor

For low values of slip, $r_2 >> (s\cdot x_2)$. So, torque is

$$T_0 = \frac{3\cdot(E_r)^2\cdot r_2\cdot s}{\omega_s\cdot(r_2)^2} = \frac{3\cdot(E_r)^2}{\omega_s}\cdot\frac{s}{r_2}$$

This shows that $T_0 \propto s$, the characteristic being linear. The following points may be noted. The output torque developed is zero (0.0), at $s = 0.0$, or if the motor is rotated at synchronous speed ($n_r = n_s$). This has been described in lesson No. 30, when the

principle of operation was presented. Also, the slip at full load (output torque $=(T_0)_{fl}$) is normally 4-5% ($s_{fl}=0.04-0.05$), the full load speed of IM being 95-96% of synchronous speed ($(n_r)_{fl}=(1-s_{fl})n_s=(0.05-0.96)\cdot n_s$).

For large values of slip, $r_2 << (s\cdot x_2)$. So, torque is

$$T_0=\frac{3\cdot(E_r)^2\cdot r_2\cdot s}{\omega_s\cdot(s\cdot x_2)^2}=\frac{3\cdot(E_r)^2}{\omega_s}\cdot\frac{r_2}{s\cdot(x_2)^2}$$

This shows that, $T_0\propto(1/s)$, the characteristic being hyperbolic. The starting torque ($s=1.0$, or $n_r=0.0$) developed, along with starting current, is discussed later.

So, starting from low value of slip ($s>0.0$), at which torque is proportional to slip, whereas for large values of slip ($s<1.0$), torque is inverse proportional to slip, both being derived earlier. In the characteristic shown, it may be observed that torque reaches a maximum value, which can be obtained in the following way. The relation between torque and slip is

$$T_0=\frac{K\cdot r_2\cdot s}{\left[(r_2)^2+(s\cdot x_2)^2\right]}\qquad \text{where, } K=3\cdot(E_r)^2/\omega_s$$

$$\text{or, } \frac{1}{T_0}=\frac{\left[(r_2)^2+(s\cdot x_2)^2\right]}{K\cdot r_2\cdot s}=\frac{1}{K}\left(\frac{r_2}{s}+\frac{s\cdot(x_2)^2}{r_2}\right)$$

To determine the maximum value of torque (T_0) in terms of slip, the minimum value of its inverse ($1/T_0$) need be determined from the relation,

$$\frac{d}{ds}\left(\frac{1}{T_0}\right)=\frac{1}{K}\left(-\frac{r_2}{s^2}+\frac{(x_2)^2}{r_2}\right)=0$$

from which $s^2=\left(\frac{(r_2)^2}{(x_2)^2}\right)$ or, $s=r_2/x_2$.

Please note that, for motoring condition as shown earlier, slip, s is positive (+ve), as $n_r<n_s$. At this slip, $s=s_m$, $r_2=s_m\cdot x_2$. This may be termed as slip at maximum torque. The motor speed is [$(n_r)_m=(1-s_m)n_s$]. This value of slip is small, for normal wound rotor (or slip ring) IM, without any additional resistance inserted in the rotor circuit. This value is higher in the case of squirrel cage IM.

Substituting the value of s, the maximum value of torque is

$$T_{0m}=\frac{K}{2\cdot x_2}=\frac{3\cdot(E_r)^2}{\omega_s}\cdot\frac{1}{2\cdot x_2}$$

which shows that it is independent of r_2. The maximum torque is also termed as <u>pull-out torque.</u> If the load torque on the motor exceeds this value, the motor will stall, i,e. will come to standstill condition.

The values of maximum torque and the slip at that torque, can be obtained by using

$$\frac{d}{ds}(T_0)=0.0$$

which is not shown here.

It may be observed from the torque-slip characteristic (Fig. 32.1), or described earlier, that the output torque developed increases, if the slip increases from 0.0 to s_m, or the motor speed decreases from n_s to $(n_r)_m$. This ensures stable operation of IM in this region ($0.0 < s < s_m$), for constant load torque. But the output torque developed decreases, if the slip increases from s_m to 1.0, or the motor speed decreases from $(n_r)_m$.to zero (0.0). This results in unstable operation of IM in this region ($s_m < s < 1.0$), for constant load torque. However, for fan type loads with the torque as ($T_L \propto (n_r)^2$), stable operation of IM is achieved in this region ($s_m < s < 1.0$).

Starting Current and Torque

The starting current (rotor) is

$$(I_2)_{st} = \frac{E_r}{\sqrt{(r_2)^2 + (x_2)^2}}$$

as slip at starting ($n_r = 0.0$) is 1.0, which is the same at standstill (or stalling condition). The magnitude of the induced voltage per phase in the stator winding is nearly same as input voltage per phase fed to the stator, if the voltage drop in the stator impedance, being small, is neglected, i.e. $V_s \approx E_s$. As shown in the earlier lesson (#31), the ratio of the induced emfs per phase in the stator and rotor winding can be taken as the ratio of the effective turns in two windings, i.e. $E_s / E_r = T_s' / T_r'$, where $T_s' = k_{ws} T_s$ and $T_r' = k_{wr} T_r$. The winding factor for the stator winding is $k_{ws} = k_{ds} \cdot k_{ps}$. Same formula is used for the above factor in the rotor winding, assuming it to be wound rotor one.

The starting current in the stator winding can be shown as $(I_s)_{st} = (I_r)_{st} \cdot (T_r' / T_s')$, neglecting the no load current. This current is normally large, much greater than full load current. This current is reduced by using starters in both types (cage and wound rotor) of IM, which will be taken up in the next lesson.

The starting torque in $N \cdot m$ is

$$(T_0)_{st} = 3 \cdot \left((I_2)_{st}\right)^2 \cdot r_2 / \omega_s = \frac{3 \cdot (E_r)^2 \cdot r_2}{\omega_s \cdot \left[(r_2)^2 + (x_2)^2\right]}$$

This expression is obtained substituting $s = 1.0$ in the expression of T_0 derived earlier. If the starter is used, the starting torque is also reduced, as is the case with starting current.

Torque-slip (speed) Characteristics,
with variation in input (stator) voltage and rotor circuit resistance

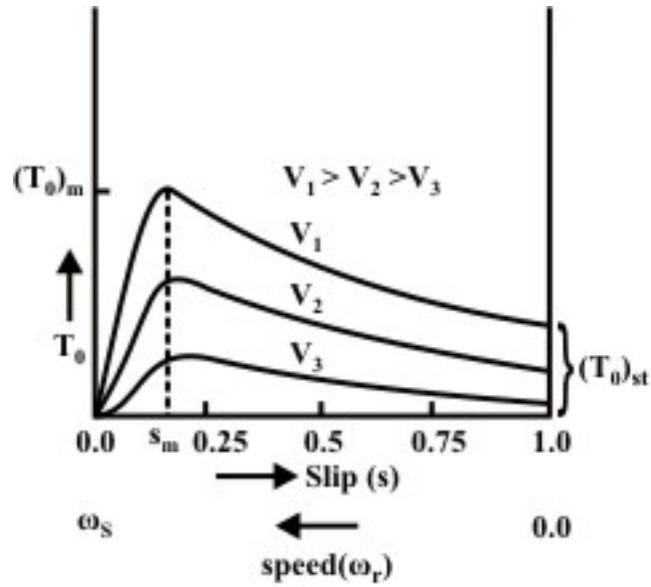

(a)

Fig. 32.2: Terque-speed characteristics for (a) variation in input(stator)voltage.

The set of torque-slip characteristics with variation in input (stator) voltage is shown in Fig. 32.2a. The point to note that the torque at a given slip decreases with the decrease in input (stator) voltage, as $T_0 \propto V^2$. The characteristics shown are for decreasing stator voltages ($V_1 > V_2 > V_3$). The speed decreases or the slip increases with constant load torque, as the input (stator) voltage decreases. The region for stable operation with constant load torque remains same ($0.0 < s < s_m$), as given earlier. But again, stable operation can be obtained in the region ($s_m < s < 1.0$), with fan type loads with the torque as ($T_L \propto (n_r)^2$). Another problem is that the maximum or pull-out torque decreases as $(T_0)_m \propto V^2$, where V is input (stator) voltage, which is a drawback with constant load torque operation..

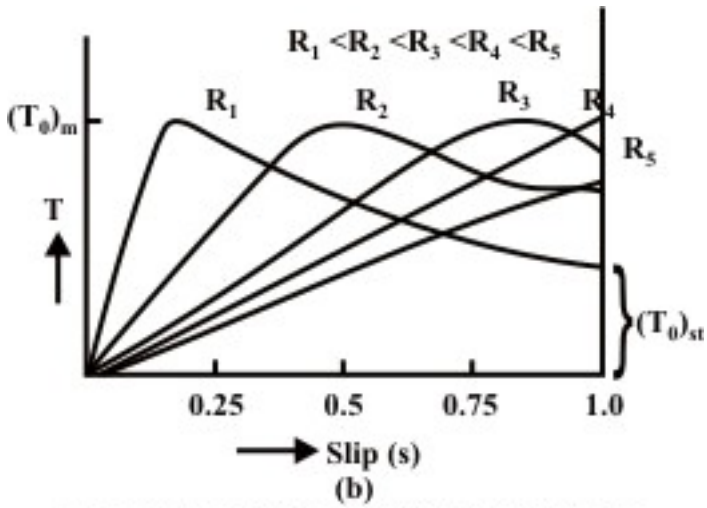

Fig. 32.2: variation in total rotor resistance.

The set of torque-slip characteristics with variation in rotor circuit resistance is shown in Fig. 32.2b. The characteristics shown are for increasing rotor circuit resistances ($r_2 > R_2 > R_3 > R_4$). The point to note that, the maximum torque remains same for all the characteristics. This has been shown earlier that the maximum torque depends on rotor reactance only, but not on rotor circuit resistance. Only the slip at maximum torque increases with the increase in rotor circuit resistance. So, for constant load torque operation, the slip increases or the speed decreases with the increase in rotor circuit resistance. The motor efficiency decreases, as the rotor copper loss increases with the increase in slip. The load torque remains same, but the output power decreases, as the speed decreases. Also, it may be observed that the starting torque increases with the increase in rotor circuit resistance, with the total rotor circuit resistance lower than rotor reactance. The starting torque is equal to the maximum torque, when the total rotor circuit resistance is equal to rotor reactance. If the rotor circuit resistance is more than rotor reactance, the starting torque decreases.

In this lesson − the fourth one of this module, the expression of gross torque developed, as a function of slip (speed), in IM has been derived first. The sketches of the different torque-slip (speed) characteristics, with the variations in input (stator) voltage and rotor resistance, are presented, along with the explanation of their features. Lastly, the expression of maximum torque developed and also the slip, where it occurs, have been derived. In the next lesson, the various types of starters used in IM will be presented, along with the need of the starters, followed by the comparison of the starting current and torque developed using the starters.

Module 8

Three-phase Induction Motor

Lesson 33

Different Types of Starters for Induction Motor (IM)

Instructional Objectives

- Need of using starters for Induction motor
- Two (Star-Delta and Auto-transformer) types of starters used for Squirrel cage Induction motor
- Starter using additional resistance in rotor circuit, for Wound rotor (Slip-ring) Induction motor

Introduction

In the previous, i.e. fourth, lesson of this module, the expression of gross torque developed, as a function of slip (speed), in IM has been derived first. The sketches of the different torque-slip (speed) characteristics, with the variations in input (stator) voltage and rotor resistance, are presented, along with the explanation of their features. Lastly, the expression of maximum torque developed and also the slip, where it occurs, have been derived. In this lesson, starting with the need for using starters in IM to reduce the starting current, first two (Star-Delta and Auto-transformer) types of starters used for Squirrel cage IM and then, the starter using additional resistance in rotor circuit, for Wound rotor (Slip-ring) IM, are presented along with the starting current drawn from the input (supply) voltage, and also the starting torque developed using the above starters.

Keywords: Direct-on-Line (DOL) starter, Star-delta starter, auto-transformer starter, rotor resistance starter, starting current, starting torque, starters for squirrel cage and wound rotor induction motor, need for starters.

Direct-on-Line (DOL) Starters

Induction motors can be started Direct-on-Line (DOL), which means that the rated voltage is supplied to the stator, with the rotor terminals short-circuited in a wound rotor (slip-ring) motor. For the cage rotor, the rotor bars are short circuited via two end rings. Neglecting stator impedance, the starting current in the stator windings is (see lesson 32) is

$$(I_1)_{st} = \frac{E_r'}{\sqrt{(r_2')^2 + (x_2')^2}}$$

where,

$(I_1)_{st} = (I_2')_{st} = (I_2)_{st} / a =$ Starting current in the motor (stator)

$a = \mathrm{T}_s' / T_r' =$ Effective turns ratio between stator and rotor windings

$E_s = E_r' = a\, E_r =$ Input voltage per phase to the motor (stator)

$E_r =$ Induced emf per phase in the rotor winding

$r_2' = a^2\, r_2 =$ Rotor resistance in terms of stator winding

$x_2' = a^2\, x_2 =$ Rotor reactance at standstill in terms of stator winding

The input voltage per phase to the stator is equal to the induced emf per phase in the stator winding, as the stator impedance is neglected (also shown in the last lesson (#32)).

In the formula for starting current, no load current is neglected. It may be noted that the starting current is quite high, about 4-6 times the current at full load, may be higher, depending on the rating of IM, as compared to no load current.

The starting torque is ($(T_0)_{st} \propto [(I_1)_{st}]^2$), which shows that, as the starting current increases, the starting torque also increases. This results in higher accelerating torque (minus the load torque and the torque component of the losses), with the motor reaching rated or near rated speed quickly.

Need for Starters in IM

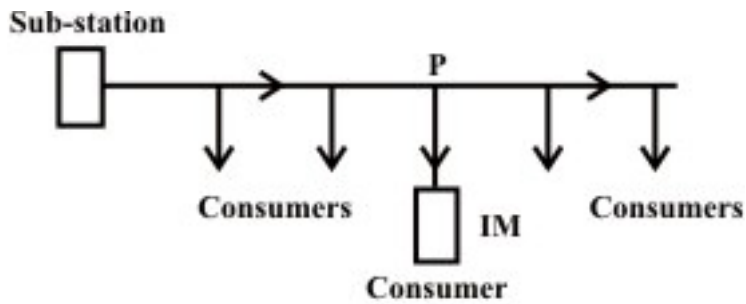

Fig. 33.1: The distribution line fed from substation for supply to various consumers.

The main problem in starting induction motors having large or medium size lies mainly in the requirement of high starting current, when started direct-on-line (DOL). Assume that the distribution line is starting from a substation (Fig. 33.1), where the supply voltage is constant. The line feeds a no. of consumers, of which one consumer has an induction motor with a DOL starter, drawing a high current from the line, which is higher than the current for which this line is designed. This will cause a drop (dip) in the voltage, all along the line, both for the consumers between the substation and this consumer, and those, who are in the line after this consumer. This drop in the voltage is more than the drop permitted, i.e. higher than the limit as per ISS, because the current drawn is more than the current for which the line is designed. Only for the current lower the current for which the line is designed, the drop in voltage is lower the limit. So, the supply authorities set a limit on the rating or size of IM, which can be started DOL. Any motor exceeding the specified rating, is not permitted to be started DOL, for which a starter is to be used to reduce the current drawn at starting.

Starters for Cage IM

The starting current in IM is proportional to the input voltage per phase (V_s) to the motor (stator), i.e. $(I_1)_{st} \propto E_s$, where, $|V_s| \approx |E_s|$, as the voltage drop in the stator impedance is small compared to the input voltage, or $|V_s| = |E_s|$, if the stator impedance is neglected. This has been shown earlier. So, in a (squirrel) cage induction motor, the

starter is used only to decrease the input voltage to the motor so as to decrease the starting current. As described later, this also results in decrease of starting torque.

Star-Delta Starter

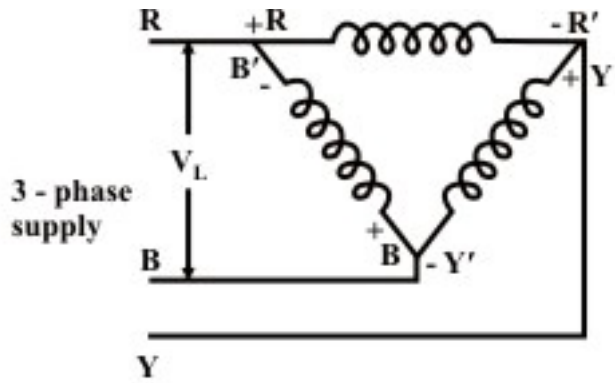

Fig. 33.2(a): Delta-connected stator winding of IM at run

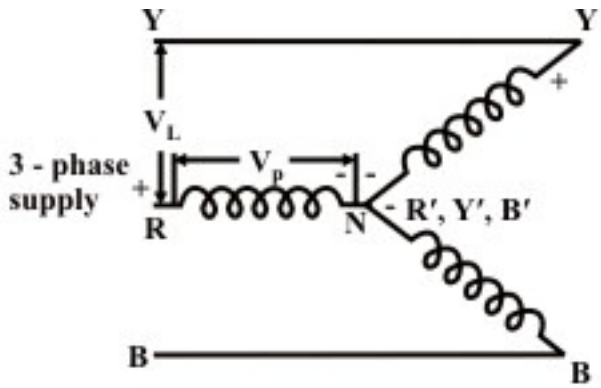

Fig. 33.2(b): same winding of IM, reconnected as star at start.

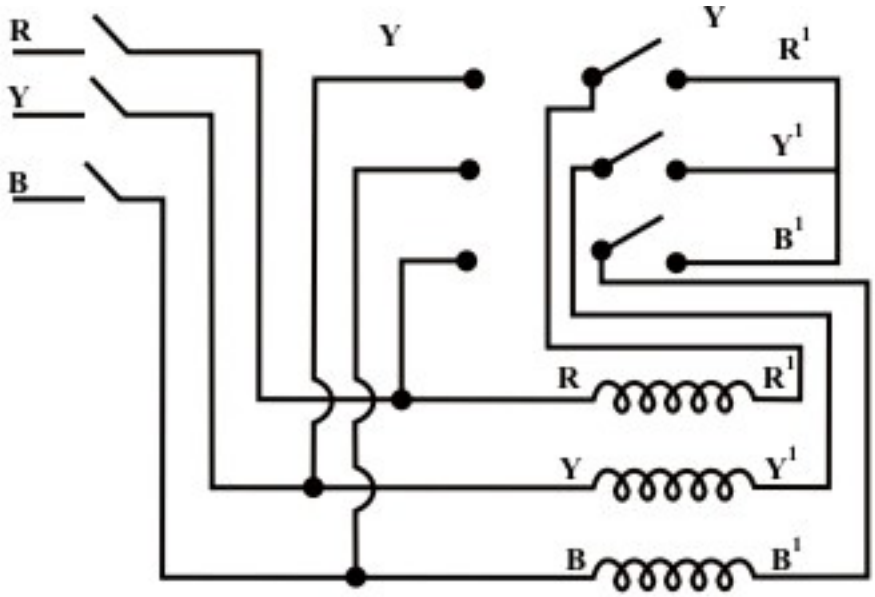

Fig. 33.2(c): T.P.D.T. switch used to first start the motor with the windings connected in star and then switch for delta connection in run position(star-delta starter).

This type is used for the induction motor, the stator winding of which is nominally delta-connected (Fig. 33.2a). If the above winding is reconnected as star (Fig. 33.2b), the voltage per phase supplied to each winding is reduced by $1/\sqrt{3}\,(0.577)$. This is a simple starter, which can be easily reconfigured as shown in Fig. 33.2c. As the voltage per phase in delta connection is V_s, the phase current in each stator winding is (V_s / Z_s), where Z_s is the impedance of the motor per phase at standstill or start (stator impedance and rotor impedance referred to the stator, at standstill). The line current or the input current to the motor is $[(I_1)_{st} = (\sqrt{3} \cdot V_s)/Z_s]$, which is the current, if the motor is started direct-on-line (DOL). Now, if the stator winding is connected as star, the phase or line current drawn from supply at start (standstill) is $[(V_s / Z_s)/\sqrt{3}]$, which is $(1/3 = (1/\sqrt{3})^2)$ of the starting current, if DOL starter is used. The voltage per phase in each stator winding is now $(.V_s / \sqrt{3})$. So, the starting current using star-delta starter is reduced by 33.3%. As for starting torque, being proportional to the square of the current in each of the stator windings in two different connections as shown earlier, is also reduced by $(1/3 = (1/\sqrt{3})^2)$, as the ratio of the two currents is $(1/\sqrt{3})$, same as that (ratio) of the voltages applied to each winding as shown earlier. So, the starting torque is reduced by 33.3%, which is a disadvantage of the use of this starter. The load torque and the loss torque, must be lower than the starting torque, if the motor is to be started using this starter. The advantage is that, no extra component, except that shown in Fig. 33.2c, need be used, thus making it simple. As shown later, this is an auto-transformer starter with the voltage ratio as 57.7%. Alternatively, the starting current in the second case with the stator winding reconnected as star, can be found by using star-delta conversion as given in lesson #18, with the impedance per phase after converting to delta, found as $(3 \cdot Z_s)$,

and the starting current now being reduced to $(1/3)$ of the starting current obtained using DOL starter, with the stator winding connected in delta.

Auto-transformer Starter

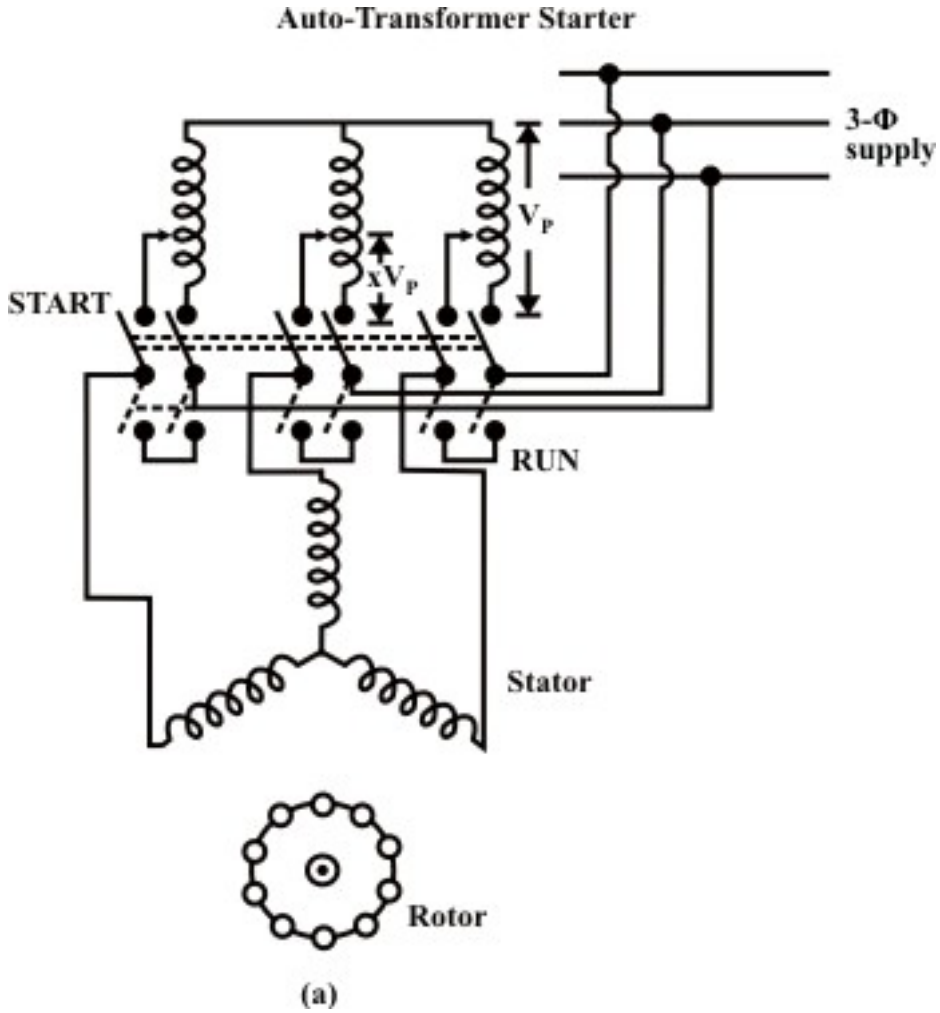

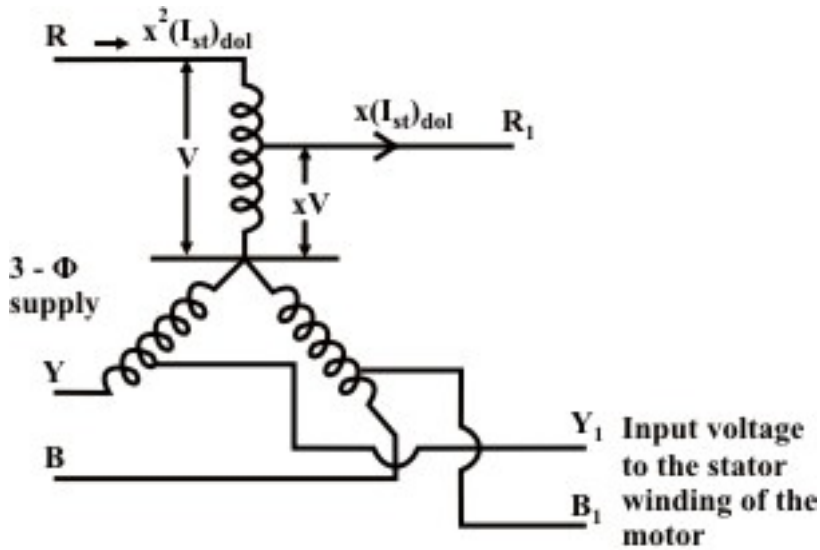

(b)

Fig. 33.3: Auto-transformer starter for IM

An auto-transformer, whose output is fed to the stator and input is from the supply (Fig. 33.3), is used to start the induction motor. The input voltage of IM is $x \cdot V_s$, which is the output voltage of the auto-transformer, the input voltage being V_s. The output voltage/input voltage ratio is x, the value of which lies between 0.0 and 1.0 ($0.0 < x < 1.0$). Let $(I_1)_{st}$ be the starting current, when the motor is started using DOL starter, i.e applying rated input voltage. The input current of IM, which is the output current of auto-transformer, is $x \cdot (I_1)_{st}$, when this starter is used with input voltage as $x \cdot V_s$. The input current of auto-transformer, which is the starting current drawn from the supply, is $x^2 \cdot (I_1)_{st}$, obtained by equating input and output volt-amperes, neglecting losses and assuming nearly same power factor on both sides. As discussed earlier, the starting torque, being proportional to the square of the input current to IM in two cases, with and without auto-transformer (i.e. direct), is also reduced by x^2, as the ratio of the two currents is x, same as that (ratio) of the voltages applied to the motor as shown earlier. So, the starting torque is reduced by the same ratio as that of the starting current. If the ratio is $x = 0.8\ (80\%)$, both starting current and torque are $x^2 = (0.8)^2 = 0.64\ (64\%)$ times the values of starting current and torque with DOL starting, which is nearly 2 times the values obtained using star-delta starter. So, the disadvantage is that starting current is increased, with the result that lower rated motor can now be started, as the current drawn from the supply is to be kept within limits, while the advantage is that the starting torque is now doubled, such that the motor can start against higher load torque. The star-delta starter can be considered equivalent to an auto-transformer starter with the ratio, $x = 0.577\,(57.7\%)$. If $x = 0.7\ (70\%)$, both starting current and torque are $x^2 = (0.7)^2 = 0.49 \approx 0.5\ (50\%)$ times the values of starting current and torque with DOL starting, which is nearly 1.5 times the values obtained using star-delta starter. By varying the value of the voltage ratio x of the auto-transformer, the

values of the starting current and torque can be changed. But additional cost of auto-transformer with intermittent rating is to be incurred for this purpose.

Rotor Resistance Starters for Slip-ring (wound rotor) IM

In a slip-ring (wound rotor) induction motor, resistance can be inserted in the rotor circuit via slip rings (Fig. 33.4), so as to increase the starting torque. The starting current in the rotor winding is

$$(I_2)_{st} = \frac{E_r}{\sqrt{(r_2 + R_{ext})^2 + (x_2)^2}}$$

where R_{ext} = Additional resistance per phase in the rotor circuit.

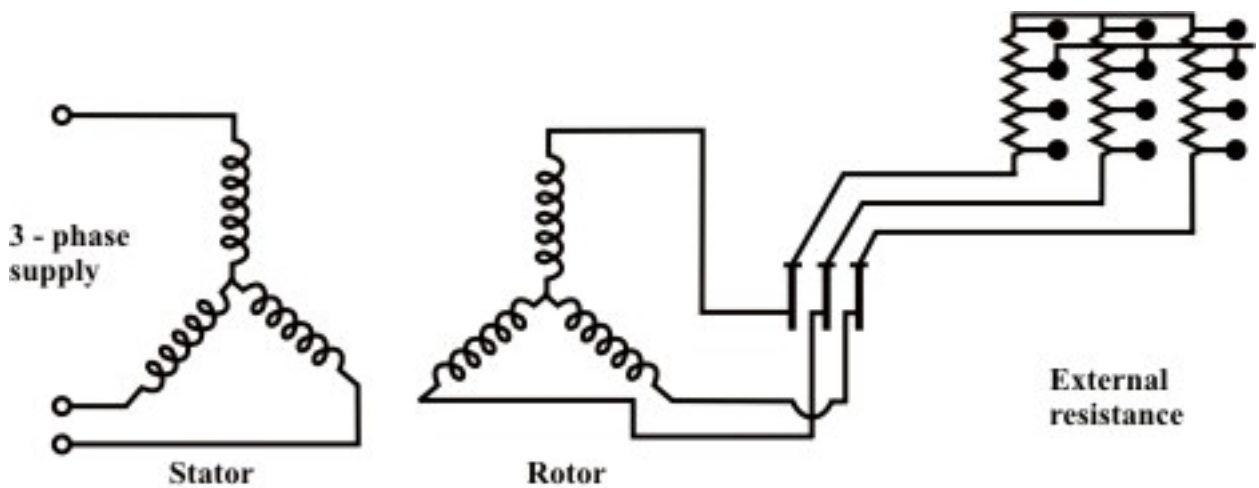

Fig. 33.4: Rotor resistance starter for IM

The input (stator) current is proportional to the rotor current as shown earlier. The starting current (input) reduces, as resistance is inserted in the rotor circuit. But the starting torque, $[(T_0)_{st} = 3 \cdot [(I_2)_{st}]^2 \cdot (r_2 + R_{ext})]$ increases, as the total resistance in the rotor circuit is increased. Though the starting current decreases, the total resistance increases, thus resulting in increase of starting torque as shown in Fig. 32.2b, and also obtained by using the expression given earlier, for increasing values of the resistance in the rotor circuit. If the additional resistance is used only for starting, being rated for intermittent duty, the resistance is to be decreased in steps, as the motor speed increases. Finally, the external resistance is to be completely cut out, i.e. to be made equal to zero (0.0), thus leaving the slip-rings short-circuited. Here, also the additional cost of the external resistance with intermittent rating is to be incurred, which results in decrease of starting current, along with increase of starting torque, both being advantageous. Also it may be noted that the cost of a slip-ring induction is higher than that of IM with cage rotor, having same power rating. So, in both cases, additional cost is to be incurred to obtain the above advantages. This is only used in case higher starting torque is needed to start IM with high load torque. It may be observed from Fig. 32.2b that the starting torque increases till it reaches maximum value, i.e. $((T_0)_{st} < (T_0)_m)$, as the external resistance in the rotor circuit is increased, the range of total resistance being $[r_2 < (r_2 + R_{ext}) < x_2]$.

The range of external resistance is between zero (0.0) and ($x_2 - r_2$). The starting torque is equal to the maximum value, i.e. ($(T_0)_{st} = (T_0)_m$), if the external resistance inserted is equal to ($x_2 - r_2$). But, if the external resistance in the rotor circuit is increased further, i.e. [$R_{ext} > (x_2 - r_2)$], the starting torque decreases ($(T_0)_{st} < (T_0)_m$). This is, because the starting current decreases at a faster rate, even if the total resistance in the rotor circuit is increased.

In this lesson − the fifth one of this module, the direct-on-line (DOL) starter used for IM, along with the need for other types of starters, has been described first. Then, two types of starters − star-delta and auto-transformer, for cage type IM, are presented. Lastly, the rotor resistance starter for slip-ring (wound rotor) IM is briefly described. In the next (sixth and last) lesson of this module, the various types of single phase induction motors, along with the starting methods, will be presented.

Module 8

Three-phase Induction Motor

Lesson 34

Starting Methods for Single-phase Induction Motor

Instructional Objectives

- Why there is no starting torque in a single-phase induction motor with one (main) winding in the stator?
- Various starting methods used in the single-phase induction motors, with the introduction of additional features, like the addition of another winding in the stator, and/or capacitor in series with it.

Introduction

In the previous, i.e. fifth, lesson of this module, the direct-on-line (DOL) starter used in three-phase IM, along with the need for starters, has been described first. Two types of starters − star-delta, for motors with nominally delta-connected stator winding, and auto-transformer, used for cage rotor IM, are then presented, where both decrease in starting current and torque occur. Lastly, the rotor resistance starter for slip-ring (wound rotor) IM has been discussed, where starting current decreases along with increase in starting torque. In all such cases, additional cost is to be incurred. In the last (sixth) lesson of this module, firstly it is shown that there is no starting torque in a single-phase induction motor with only one (main) winding in the stator. Then, the various starting methods used for such motors, like, say, the addition of another (auxiliary) winding in the stator, and/or capacitor in series with it.

Keywords: Single-phase induction motor, starting torque, main and auxiliary windings, starting methods, split-phase, capacitor type, motor with capacitor start/run.

Single-phase Induction Motor

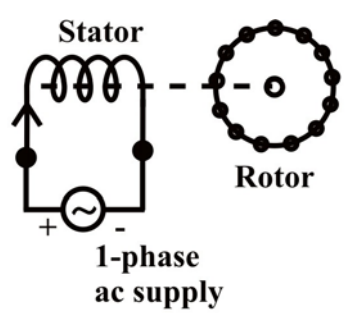

Fig. 34.1: Single Phase Induction Motor

The winding used normally in the stator (Fig. 34.1) of the single-phase induction motor (IM) is a distributed one. The rotor is of squirrel cage type, which is a cheap one, as the rating of this type of motor is low, unlike that for a three-phase IM. As the stator winding is fed from a single-phase supply, the flux in the air gap is alternating only, not a synchronously rotating one produced by a poly-phase (may be two- or three-) winding in the stator of IM. This type of alternating field cannot produce a torque ($(T_0)_{st} = 0.0$), if

the rotor is stationery ($\omega_r = 0.0$). So, a single-phase IM is not self-starting, unlike a three-phase one. However, as shown later, if the rotor is initially given some torque in either direction ($\omega_r \neq 0.0$), then immediately a torque is produced in the motor. The motor then accelerates to its final speed, which is lower than its synchronous speed. This is now explained using double field revolving theory.

Double field revolving theory

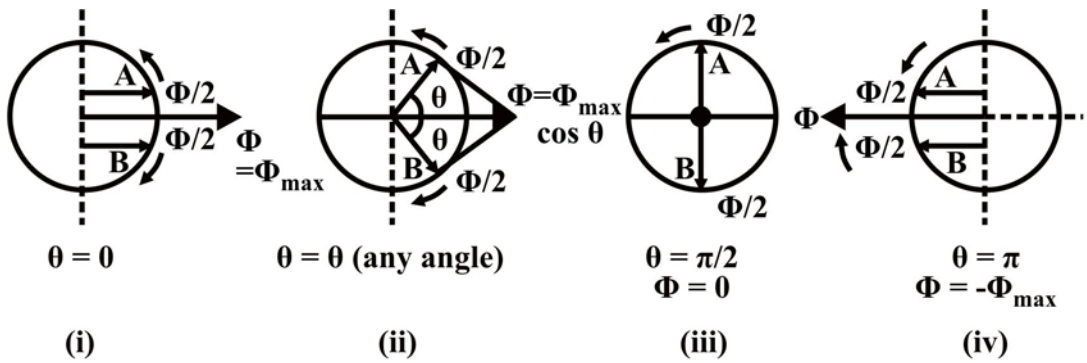

Fig. 34.2(a): Position of the pulsating and rotating in fluxes with change in angle (θ)

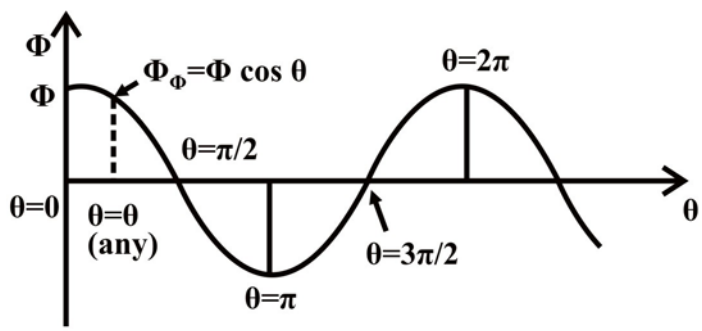

Fig. 34.2(b): Pulsating (sinusoidal) flux as a function of space angle (θ)

When the stator winding (distributed one as stated earlier) carries a sinusoidal current (being fed from a single-phase supply), a sinusoidal space distributed mmf, whose peak or maximum value pulsates (alternates) with time, is produced in the air gap. This sinusoidally varying flux (ϕ) is the sum of two rotating fluxes or fields, the magnitude of which is equal to half the value of the alternating flux ($\phi/2$), and both the fluxes rotating synchronously at the speed, ($n_s = (2 \cdot f)/P$) in opposite directions. This is shown in Fig. 34.2a. The first set of figures (Fig. 34.1a (i-iv)) show the resultant sum of the two rotating fluxes or fields, as the time axis (angle) is changing from $\theta = 0°$ to $\pi(180°)$. Fig. 34.2b shows the alternating or pulsating flux (resultant) varying with time or angle.

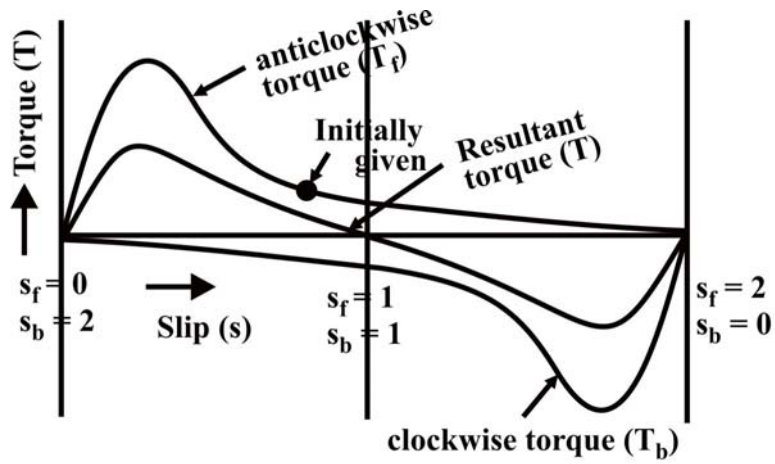

Fig. 34.3:Speed-torque characteristics of single phase induction motor

The flux or field rotating at synchronous speed, say, in the anticlockwise direction, i.e. the same direction, as that of the motor (rotor) taken as positive induces emf (voltage) in the rotor conductors. The rotor is a squirrel cage one, with bars short circuited via end rings. The current flows in the rotor conductors, and the electromagnetic torque is produced in the same direction as given above, which is termed as positive (+ve). The other part of flux or field rotates at the same speed in the opposite (clockwise) direction, taken as negative. So, the torque produced by this field is negative (-ve), as it is in the clockwise direction, same as that of the direction of rotation of this field. Two torques are in the opposite direction, and the resultant (total) torque is the difference of the two torques produced (Fig. 34.3). If the rotor is stationary ($\omega_r = 0.0$), the slip due to forward (anticlockwise) rotating field is $s_f = 1.0$. Similarly, the slip due to backward rotating field is also $s_b = 1.0$. The two torques are equal and opposite, and the resultant torque is 0.0 (zero). So, there is no starting torque in a single-phase IM.

But, if the motor (rotor) is started or rotated somehow, say in the anticlockwise (forward) direction, the forward torque is more than the backward torque, with the resultant torque now being positive. The motor accelerates in the forward direction, with the forward torque being more than the backward torque. The resultant torque is thus positive as the motor rotates in the forward direction. The motor speed is decided by the load torque supplied, including the losses (specially mechanical loss).

Mathematically, the mmf, which is distributed sinusoidally in space, with its peak value pulsating with time, is described as $F = F_{peak}\cos\theta$, θ (space angle) measured from the winding axis. Now, $F_{peak} = F_{\max}\cos\omega t$. So, the mmf is distributed both in space and time, i.e. $F = F_{\max}\cos\theta\cdot\cos\omega t$. This can be expressed as,

$$F = (F_{\max}/2)\cdot\cos(\theta-\omega t) + (F_{\max}/2)\cdot\cos(\theta+\omega t),$$

which shows that a pulsating field can be considered as the sum of two synchronously rotating fields ($\omega_s = 2\pi n_s$). The forward rotating field is, $F_f = (F_{\max}/2)\cdot\cos(\theta-\omega t)$, and the backward rotating field is, $F_b = (F_{\max}/2)\cdot\cos(\theta+\omega t)$. Both the fields have the

same amplitude equal to $(F_{\max}/2)$, where $F_{\max}$ is the maximum value of the pulsating mmf along the axis of the winding.

When the motor rotates in the forward (anticlockwise) direction with angular speed ($\omega_r = 2\pi n_r$), the slip due to the forward rotating field is,

$$s_f = (\omega_s - \omega_r)/\omega_s = 1 - (\omega_r/\omega_s), \text{ or } \omega_r = (1 - s_f)\omega_s.$$

Similarly, the slip due to the backward rotating field, the speed of which is $(-\omega_s)$, is,

$$s_b = (\omega_s + \omega_r)/\omega_s = 1 + (\omega_r/\omega_s) = 2 - s_b,.$$

The torques produced by the two fields are in opposite direction. The resultant torque is,

$$T = T_f - T_b$$

It was earlier shown that, when the rotor is stationary, $T_f = T_b$, with both $s_f = s_b = 1.0$, as $\omega_r = 0.0$ or $n_r = 0.0$. Therefore, the resultant torque at start is 0.0 (zero).

Starting Methods

The single-phase IM has no starting torque, but has resultant torque, when it rotates at any other speed, except synchronous speed. It is also known that, in a balanced two-phase IM having two windings, each having equal number of turns and placed at a space angle of $90°$ (electrical), and are fed from a balanced two-phase supply, with two voltages equal in magnitude, at an angle of $90°$, the rotating magnetic fields are produced, as in a three-phase IM. The torque-speed characteristic is same as that of a three-phase one, having both starting and also running torque as shown earlier. So, in a single-phase IM, if an auxiliary winding is introduced in the stator, in addition to the main winding, but placed at a space angle of $90°$ (electrical), starting torque is produced. The currents in the two (main and auxiliary) stator windings also must be at an angle of $90°$, to produce maximum starting torque, as shown in a balanced two-phase stator. Thus, rotating magnetic field is produced in such motor, giving rise to starting torque. The various starting methods used in a single-phase IM are described here.

Resistance Split-phase Motor

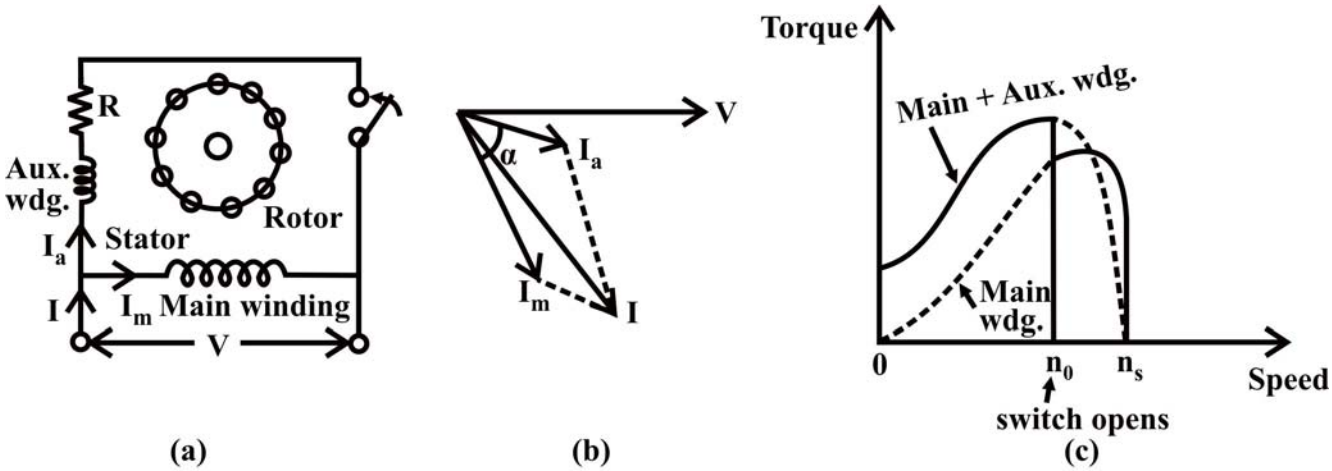

Fig. 34.4: Resistance Split-phase Induction Motor
(a) Schematic Diagram
(b) Phasor Diagram
(c) Torque-Speed characteristic

The schematic (circuit) diagram of this motor is given in Fig. 34.4a. As detailed earlier, another (auxiliary) winding with a high resistance in series is to be added along with the main winding in the stator. This winding has higher resistance to reactance (R_a / X_a) ratio as compared to that in the main winding, and is placed at a space angle of $90°$ from the main winding as given earlier. The phasor diagram of the currents in two windings and the input voltage is shown in Fig. 34.4b. The current (I_a) in the auxiliary winding lags the voltage (V) by an angle, ϕ_a, which is small, whereas the current (I_m) in the main winding lags the voltage (V) by an angle, ϕ_m, which is nearly $90°$. The phase angle between the two currents is ($90° - \phi_a$), which should be at least $30°$. This results in a small amount of starting torque. The switch, S (centrifugal switch) is in series with the auxiliary winding. It automatically cuts out the auxiliary or starting winding, when the motor attains a speed close to full load speed. The motor has a starting torque of 100−200% of full load torque, with the starting current as 5-7 times the full load current. The torque-speed characteristics of the motor with/without auxiliary winding are shown in Fig. 34.4c. The change over occurs, when the auxiliary winding is switched off as given earlier. The direction of rotation is reversed by reversing the terminals of any one of two windings, but not both, before connecting the motor to the supply terminals. This motor is used in applications, such as fan, saw, small lathe, centrifugal pump, blower, office equipment, washing machine, etc.

Capacitor Split-phase Motor

The motor described earlier, is a simple one, requiring only second (auxiliary) winding placed at a space angle of $90°$ from the main winding, which is there in nearly all such motors as discussed here. It does not need any other thing, except for centrifugal switch, as the auxiliary winding is used as a starting winding. But the main problem is

low starting torque in the motor, as this torque is a function of, or related to the phase difference (angle) between the currents in the two windings. To get high starting torque, the phase difference required is 90° (Fig. 34.5b), when the starting torque will be proportional to the product of the magnitudes of two currents. As the current in the main winding is lagging by ϕ_m, the current in the auxiliary winding has to lead the input voltage by ϕ_a, with ($\phi_m + \phi_a = 90°$). ϕ_a is taken as negative (-ve), while ϕ_m is positive (+ve). This can be can be achieved by having a capacitor in series with the auxiliary winding, which results in additional cost, with the increase in starting torque, The two types of such motors are described here.

Capacitor-start Motor

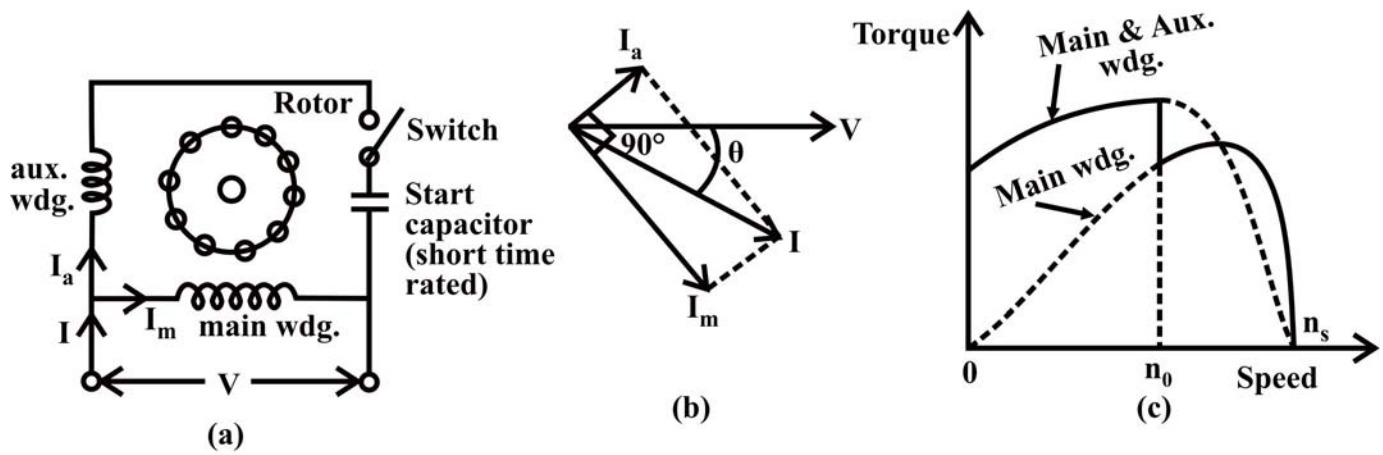

Fig. 34.5: Capacitor-Start Induction Motor
(a) Schematic Diagram
(b) Phasor Diagram
(c) Torque-Speed characteristic

The schematic (circuit) diagram of this motor is given in Fig. 34.5a. It may be observed that a capacitor along with a centrifugal switch is connected in series with the auxiliary winding, which is being used here as a starting winding. The capacitor may be rated only for intermittent duty, the cost of which decreases, as it is used only at the time of starting. The function of the centrifugal switch has been described earlier. The phasor diagram of two currents as described earlier, and the torque-speed characteristics of the motor with/without auxiliary winding, are shown in Fig. 34.5b and Fig. 34.5c respectively. This motor is used in applications, such as compressor, conveyor, machine tool drive, refrigeration and air-conditioning equipment, etc.

Capacitor-start and Capacitor-run Motor

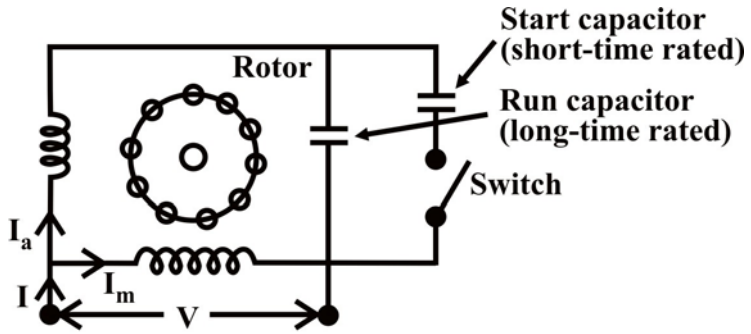

(a)

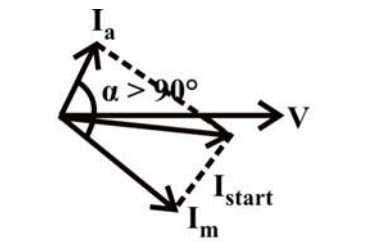

(i)

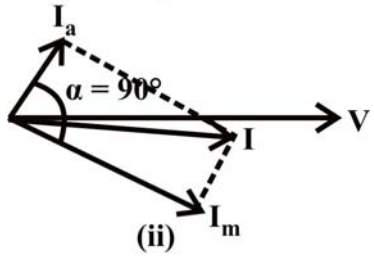

(ii)

(b)

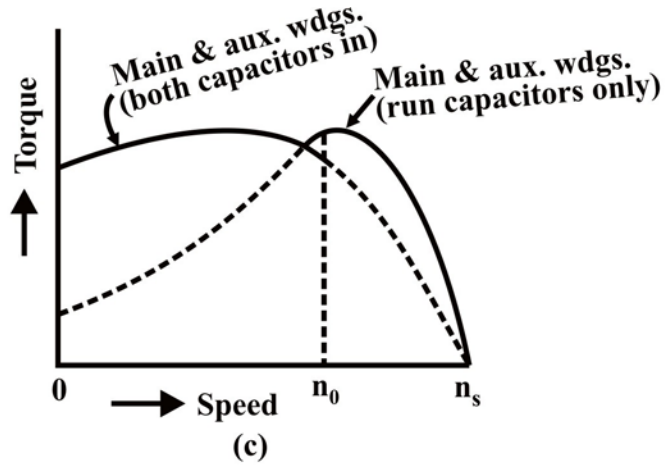

Fig. 34.6: Capacitor-Start and Capacitor-run Induction Motor
(a) Schematic Diagram
(b) Phasor Diagrams
(c) Torque-Speed characteristics

In this motor (Fig. 34.6a), two capacitors $-C_s$ for starting, and C_r for running, are used. The first capacitor is rated for intermittent duty, as described earlier, being used only for starting. A centrifugal switch is also needed here. The second one is to be rated for continuous duty, as it is used for running. The phasor diagram of two currents in both cases, and the torque-speed characteristics with two windings having different values of capacitors, are shown in Fig. 34.6b and Fig. 34.6c respectively. The phase difference between the two currents is ($\phi_m + \phi_a > 90°$) in the first case (starting), while it is $90°$ for second case (running). In the second case, the motor is a balanced two phase one, the two windings having same number of turns and other conditions as given earlier, are also satisfied. So, only the forward rotating field is present, and the no backward rotating field exists. The efficiency of the motor under this condition is higher. Hence, using two capacitors, the performance of the motor improves both at the time of starting and then running. This motor is used in applications, such as compressor, refrigerator, etc.

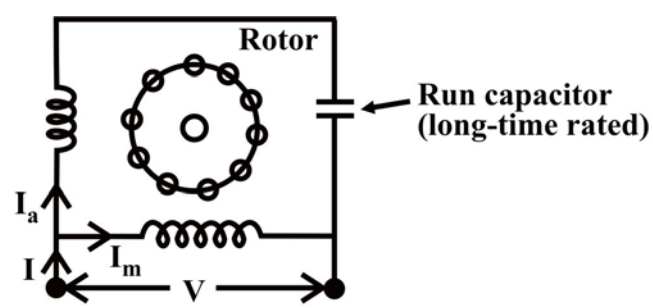

Fig. 34.7: Schematic Diagram of Capacitor-run Induction Motor

Beside the above two types of motors, a Permanent Capacitor Motor (Fig. 34.7) with the same capacitor being utilised for both starting and running, is also used. The power factor of this motor, when it is operating (running), is high. The operation is also quiet

and smooth. This motor is used in applications, such as ceiling fans, air circulator, blower, etc.

Shaded-pole Motor

A typical shaded-pole motor with a cage rotor is shown in Fig. 34.8a. This is a single-phase induction motor, with main winding in the stator. A small portion of each pole is covered with a short-circuited, single-turn copper coil called the shading coil. The sinusoidally varying flux created by ac (single-phase) excitation of the main winding induces emf in the shading coil. As a result, induced currents flow in the shading coil producing their own flux in the shaded portion of the pole.

Let the main winding flux be $\phi_m = \phi_{\max} \sin \omega t$

where

$\phi_m = \phi_m^{sc}$ (flux component linking shading coil)

$+ \phi_m'$ (flux component passing down the air-gap of the rest of the pole)

The emf induced in the shading coil is given by

$$e_{sc} = \frac{d\phi_m^{sc}}{dt} \text{ (since single-turn coil) } = \phi_{\max}^{sc}\, \omega \cos \omega t$$

Let the impedance of the shading coil be $Z_{sc} \angle \theta_{sc} = R_{sc} + j X_{sc}$

The current in the shading coil can then be expressed as

$$i_{sc} = \left[\left(\phi_{\max}^{sc}\, \omega\right) / Z_{sc}\right] \cos(\omega t - \theta_{sc})$$

The flux produced by i_{sc} is

$$\phi_{sc} = \frac{1 \times i_{sc}}{R} = \frac{\omega\, \phi_{\max}^{sc}}{Z_{sc}\, R} \cos(\omega t - \theta_{sc})$$

where $R =$ reluctance of the path of ϕ_{sc}

As per the above equations, the shading coil current (I_{sc}) and flux (ϕ_{sc}) phasors lag behind the induced emf (E_{sc}) by angle θ_{sc} ; while the flux phasor leads the induced emf (E_{sc}) by $90°$. Obviously the phasor ϕ_m' is in phase with ϕ_m^{sc}. The resultant flux in the shaded pole is given by the phasor sum

$$\phi_{sp} = \phi_m^{sc} + \phi_{sc}$$

as shown in Fig. 34.8b and lags the flux ϕ_m' of the remaining pole by the angle α. The two sinusoidally varying fluxes ϕ_m' and ϕ_{sp}' are displaced in space as well as have a time phase difference (α), thereby producing forward and backward rotating fields, which produce a net torque. It may be noted that the motor is self-starting unlike a single-phase single-winding motor.

It is seen from the phasor diagram (Fig. 34.8b) that the net flux in the shaded portion of the pole (ϕ_{sp}) lags the flux (ϕ_m') in the unshaded portion of the pole resulting in a net torque, which causes the rotor to rotate from the unshaded to the shaded portion of the pole. The motor thus has a definite direction of rotation, which cannot be reversed.

The reversal of the direction of rotation, where desired, can be achieved by providing two shading coils, one on each end of every pole, and by open-circuiting one set of shading coils and by short-circuiting the other set.

The fact that the shaded-pole motor is single-winding (no auxiliary winding) self-starting one, makes it less costly and results in rugged construction. The motor has low efficiency and is usually available in a range of 1/300 to 1/20 kW. It is used for domestic fans, record players and tape recorders, humidifiers, slide projectors, small business machines, etc. The shaded-pole principle is used in starting electric clocks and other single-phase synchronous timing motors.

In this lesson − the sixth and last one of this module, firstly, it is shown that, no starting torque is produced in the single-phase induction motor with only one (main) stator winding, as the flux produced is a pulsating one, with the winding being fed from single phase supply. Using double revolving field theory, the torque-speed characteristics of this type of motor are described, and it is also shown that, if the motor is initially given some torque in either direction, the motor accelerates in that direction, and also the torque is produced in that direction. Then, the various types of single phase induction motors, along with the starting methods used in each one are presented. Two stator windings − main and auxiliary, are needed to produce the starting torque. The merits and demerits of each type, along with their application area, are presented. The process of production of starting torque in shade-pole motor is also described in brief. In the next module consisting of seven lessons, the construction and also operation of dc machines, both as generator and motor, will be discussed.

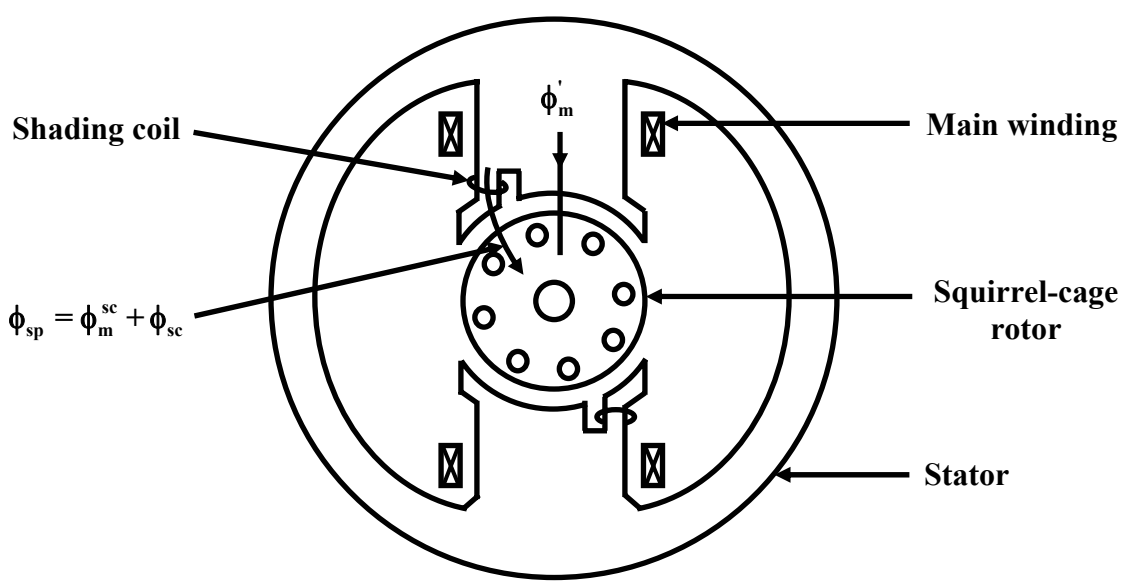

Fig. 34.8(a): Shaded-pole motor (single-phase induction type)

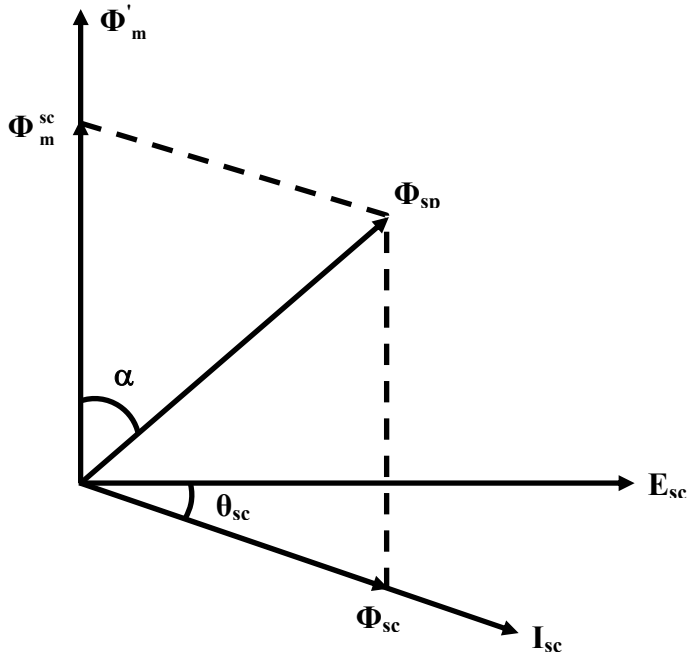

Fig. 34.8(b): Phasor diagram of the fluxes in shaded=pole motor

Module 9

DC Machines

Lesson 35

Constructional Features of D.C Machines

Contents

35 D.C Machines (Lesson-35) 4

35.1 Goals of the lesson ……. 4

35.2 Introduction …… 4

35.3 Constructional Features ……. 4

35.4 D.C machine Armature Winding ……. 11

35.4.1 Armature winding: General procedure ……. 12

35.4.2 Developed diagram …….. 13

35.5 Lap winding …… 13

35.5.1 Another example of Lap winding …….. 17

35.6 Wave winding …… 18

35.6.1 An example ……. 20

35.7 Answer the following ……. 23

35.1 Goals of the lesson

In this lesson, important constructional features of a D.C machine are presented along with a discussion on D.C armature winding.
Key Words: Field winding, armature winding, commutator segments & brush arrangement.

After going through this section students will have clear ideas about the followings:

- The function of commutator & brush in a D.C Machine.
- Double layer winding.
- Coil span & commutator pitch.
- Lap & wave winding and number of armature parallel paths.

35.2 Introduction

As pointed out earlier, D.C machines were first developed and used extensively in spite of its complexities in the construction. The generated voltage in a coil when rotated relative to a magnetic field, is inherently *alternating* in nature. To convert this A.C voltage into a D.C voltage we therefore need a *unit* after the coil terminals. This unit comprises of a number *commutator segments* attached to the shaft of the rotor and a pair of suitably placed stationary *carbon brushes* touching the commutator segments. Commutator segments together with the fixed brushes do the necessary rectification from A.C to D.C and hence sometimes called *mechanical rectifier.*

35.3 Constructional Features

Figure 35.1 shows a sectional view of a 4-pole D.C machine. The length of the machine is perpendicular to the paper. Stator has got 4 numbers of projected poles with coils wound over it. These coils may be connected in series in order that consecutive poles produce opposite polarities (i.e., N-S-N-S) when excited from a source. Double layer lap or wave windings are generally used for armature. Essentially all the armature coils are connected in series forming a closed armature circuit. However as the coils are distributed, the resultant voltage acting in the closed path is zero thereby ensuring no circulating current in the armature. The junctions of two consecutive coils are terminated on to the commutator segments. Stationary carbon brushes are placed *physically* under the center of the stator poles touching the rotating commutator segments.

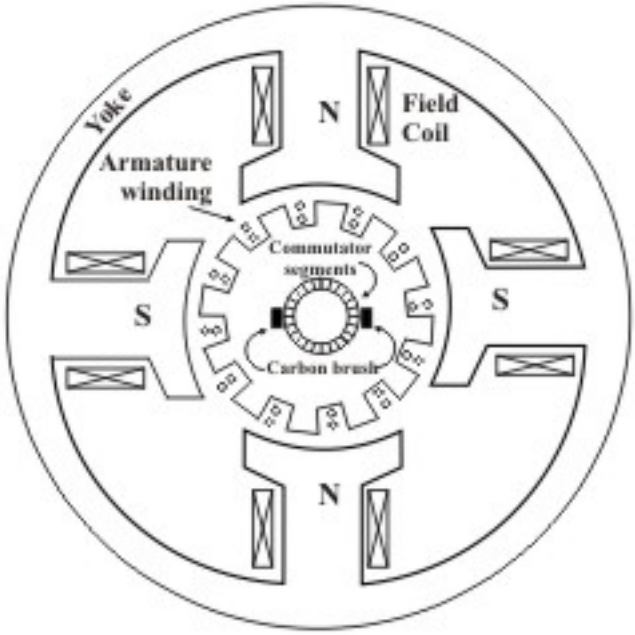

Figure 35.1: Sectional diagram of a D, C machine

Now let us examine how a D.C voltage is obtained across the brushes (armature terminals). Let us fix our attention to a particular position in space. Whichever conductor is present there right now, will have some definite induced voltage in it (dictated by $e = blv$). In course of rotation of the armature newer conductors will occupy this position in space. No matter which conductor comes to that particular position at any given point of time, it will have same voltage induced in it. This is true for all the positions although the magnitude and polarity of the voltages in different position may be different. The polarity of the voltage is opposite for conductor positions under north or south pole. Remembering that all the conductors are connected in series and brushes are suitably placed for obtaining maximum voltage, the magnitude of the voltage across the brushes will remain constant.

To understand the action of the commutator segments and brushes clearly, let us refer to the following figures (35.3 and 35.4) where a simple d.c machine working as generator are shown with armature occupying various positions. Armature has got a single rectangular coil with sides 1 and 2 shown in detail in figure (35.2). The two terminals 1 and 2 of the coil are firmly joined to commutator segments C1 and C2 respectively. Commutator segments C1 and C2, made of copper are insulated by mica insulation shown by lines between C1 and C2 and rotate along with the armature.

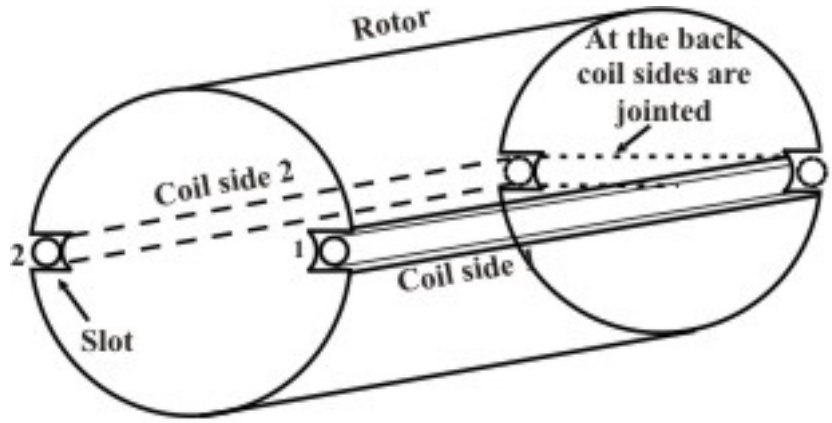

Figure 35.2: 3 dimensional view of a simple armature

B1 and B2 are stationary carbon brushes are placed over the rotating commutator in such a way that they always make electrical contact with the commutator segments. It is from the two brushes, two terminals are taken out and called the *armature* terminals. Brushes are kept in brush holders with a spring arrangement. Spring tension is so optimally adjusted that brushes make good contact with the commutator segments C1 and C2 and at the same time allows the rotor to move freely. Free end of conductors 1 and 2 are respectively terminated on C1 and C2. In other words any point on C1 represents free end of the conductor 1. Similarly any point on C2 represents free end of conductor 2. However, fixed brushes B1 and B2 make periodically contact with both C1 and C2 as rotor rotates. For clarity, field coils are not shown in the figure. Let us assume that the polarity of the projected stator poles are N and S. Let the armature be driven at a constant angular speed of ω in the ccw direction. Start counting time from the instant when the plane of the coil is vertical i.e., along the reference line. Position of the armature at this instant is shown in figure 35.3(i). There cannot be any induced voltage in conductors 1 and 2 at this position as no flux density component is available perpendicular to the tangential velocity of conductors 1 and 2.

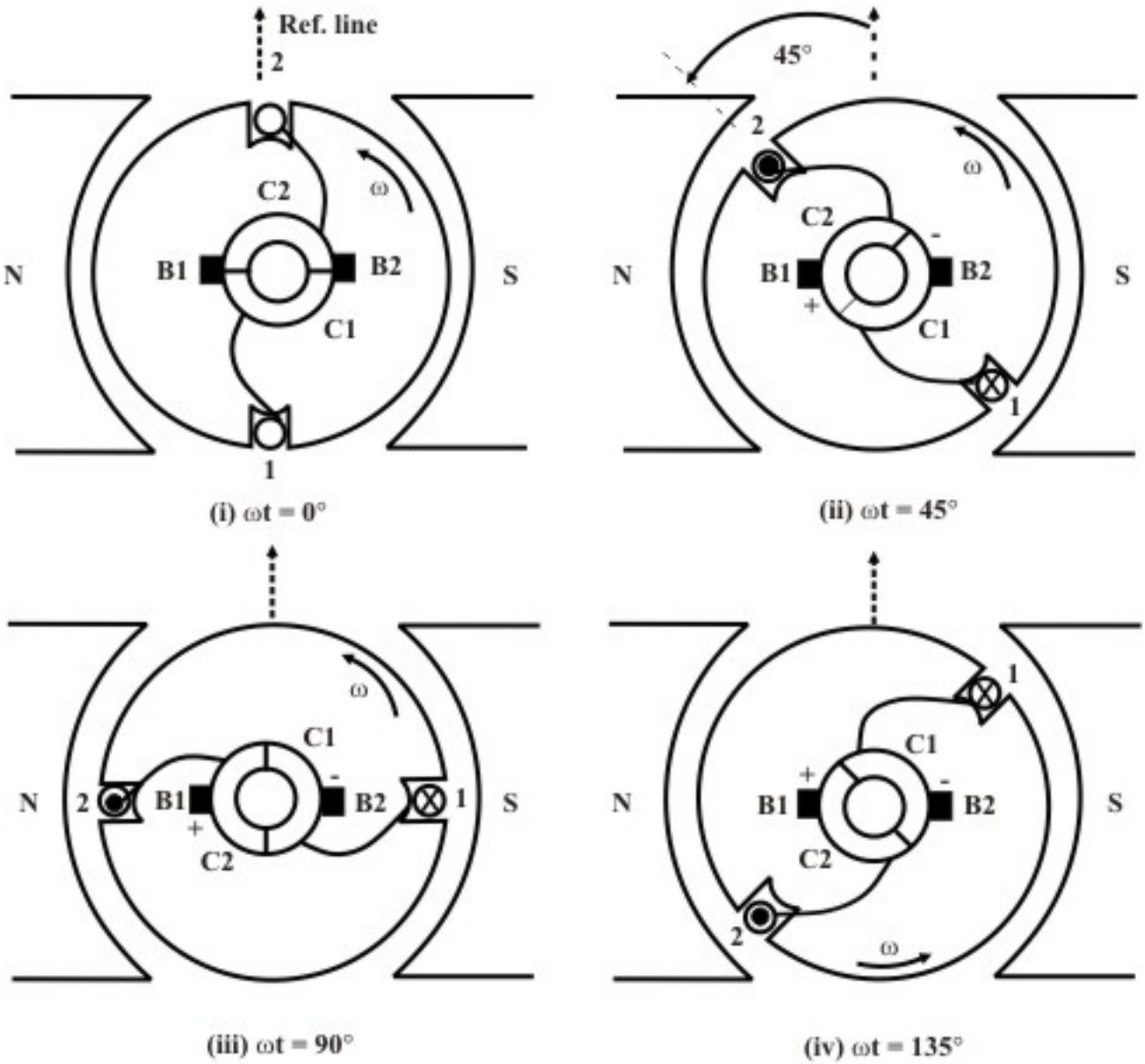

Figure 35.3: Explaining commutator & brush action

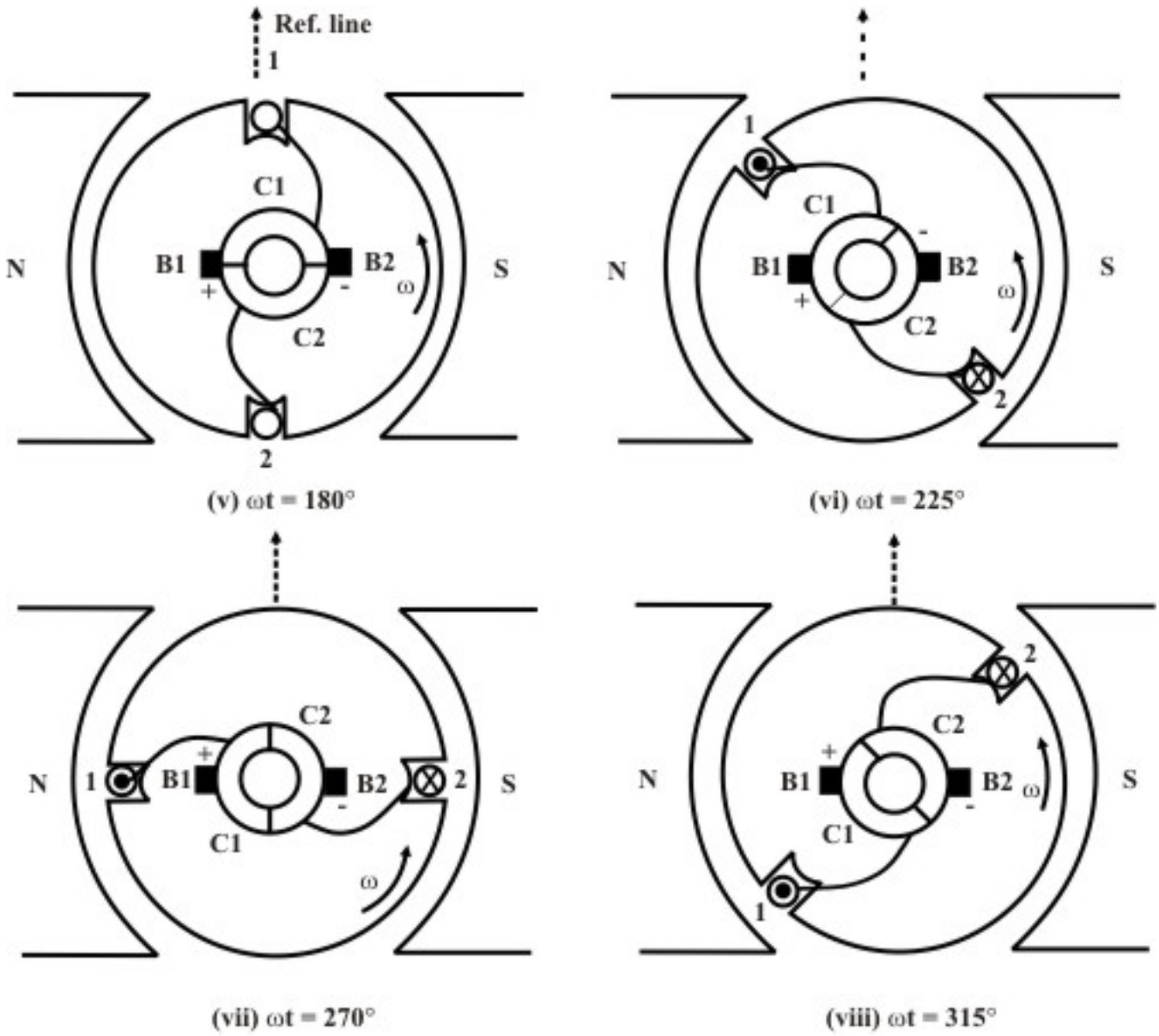

Figure 35.4: Explaining commutator & brush action

It is interesting to note that the coil is short circuited via commutator segment C2, brush B1, commutator segment C1 and brush B2 at ωt = 0 position. This short circuiting does not however produce circulating current in absence of any voltage. Let the coil moves by some angle, say 45° as in figure 35.3(ii). Since conductor 2 is under the influence of N pole, polarity of the induced voltage in it will be ⊙. Similarly conductor 1 being under the influence of the S pole, polarity of the induced voltage in it will be ⊗. Therefore across B1 and B2 we will get a voltage with B1 being +ve and B2 being -ve. The polarity of the voltage in conductors 2 and 1 does not change so long 2 remains under N pole (which automatically means 1 under S pole). Figures 35.3(i) to 35.3(iv) show some selected positions of the coil corresponding to ωt = 0°, ωt = 45°, ωt = 90°, ωt = 135° and ωt = 180°. After this conductor 2 comes under S pole and conductor 1 under N pole. Therefore polarity of voltage in conductor 1 is ⊙ while polarity of voltage in conductor 2 is ⊗. B1 now makes contact with C1 and B2 makes contact with C2.

Thus polarity of B1 remains +ve as before and that of B2 remains –ve unaltered. Before going further you must understand very clearly the following:

1. Polarity of voltage across C1 and C2 will periodically reverse. This is because any point on C1 always means free end of conductor 1 and any point on C2 always means free end of conductor 2. In other words V_{C1C2} will be alternating in nature.

2. Polarity of voltage across B1 and B2 will not change with time – in the present case, B1 always remains +ve and B2 always – ve. Thus V_{B1B2} always remains *unidirectional.*

3. A particular brush is not associated with a fixed conductor but it makes contact with different conductors when they come at some fixed position in space. In this simple machine, any conductor coming between $0 < \omega t < 180°$ in space will be connected always to B1.

Although, the voltage V_{B1B2} is always +ve (i.e., unidirectional), its magnitude does not remain constant, since $e = Blv$ and value of B is not constant under a pole. If B is sinusoidally distributed with $B = B_{max} \sin\theta$ [figure (35.5)], then variation of V_{C1C2} and V_{B1B2} are as shown in figures (35.6 and 35.7).

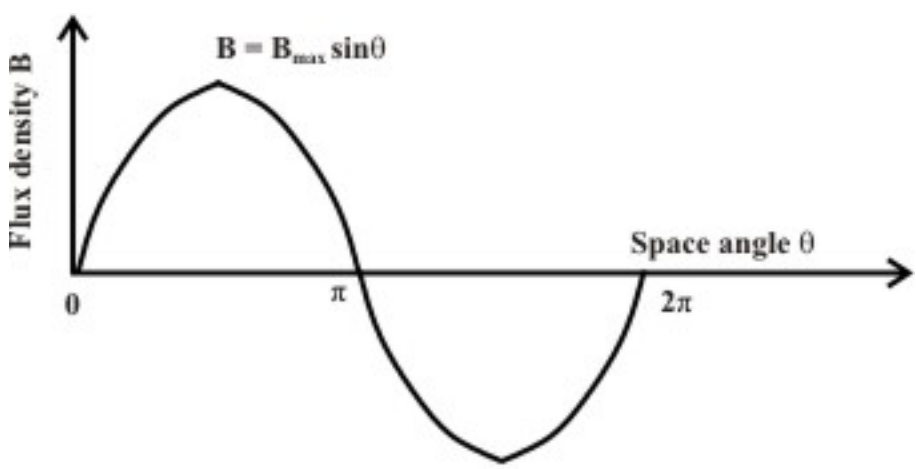

Figure 35.5: Flux density distribution in space

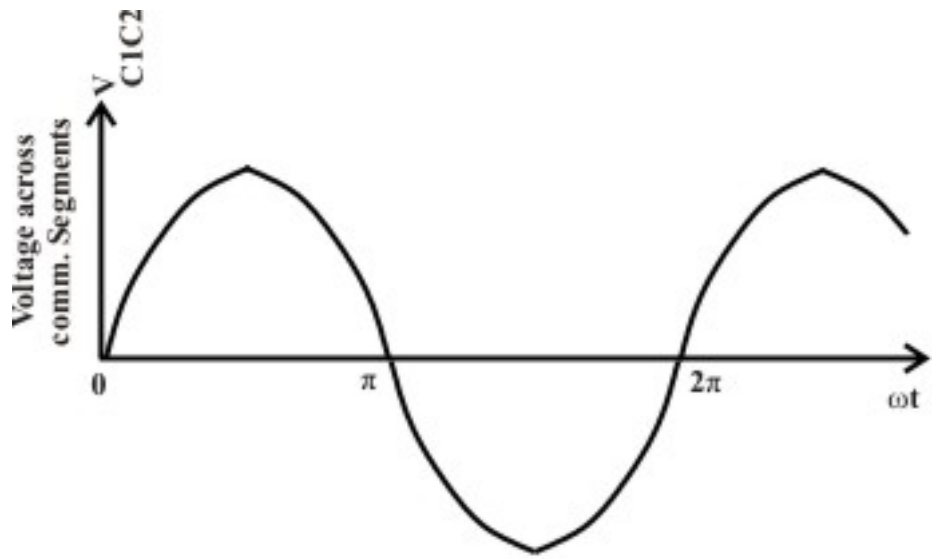

Figure 35.6: Voltage across commutator segments

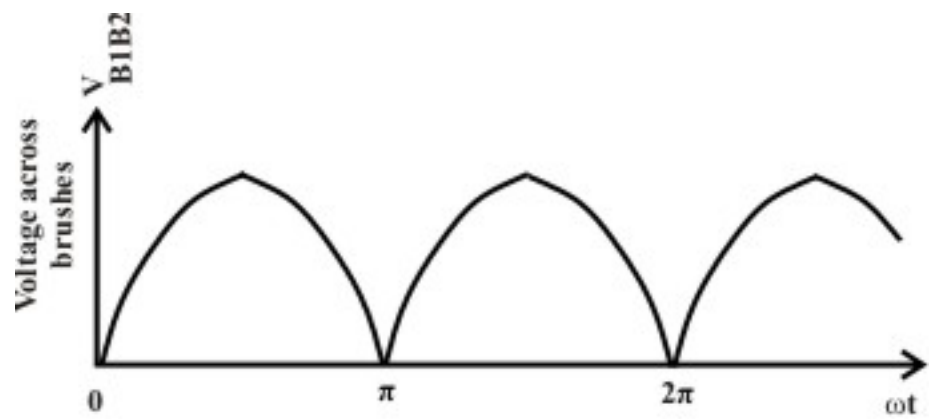

Figure 35.7: Voltage across brushes

The brush voltage (or armature voltage) obtained from this simple generator having a single turn in the armature, is unidirectional no doubt but the magnitude of the voltage is not constant with time. Therefore, to improve the quality of the voltage similar to the nature of a battery voltage, a single coil in the armature with two commutator segments will not do. In fact, a practical d.c machine armature will have large number of slots housing many coils along with a large number of commutator segments. All the coils are connected in series forming a closed circuit. However, no circulating current result as the net emf acting in the closed circuit is zero. Each coil ends are terminated on two commutator segments. Armature windings may be of different types (namely lap and wave), depending on which coil ends are terminated on specific commutator segments. For example, when ends of a coil are terminated on two *consecutive* segments, lap connected armature winding is obtained. On the other hand, if the ends of a coil are terminated on segments which are apart by approximately *two pole pitch*, a wave connected armature winding results. It can be shown that in armature, across the brushes there exists parallel paths denoted by a. Number of parallel paths (a) in case of lap winding is equal to the number poles (P) of the machine while a = 2 in case of wave winding. We shall discuss along with diagrams Simple lap and wave windings in the following sections. To know more about d.c

machine armature windings, one may refer to any standard book on Electrical Machine Design. It may be emphasized, that to analyse the performance of a d.c machine one should at least be aware of the fact that:

$$\text{Number of parallel paths in armature, } a = P \text{ for LAP winding.}$$
$$\text{and } a = 2 \text{ for WAVE winding.}$$

35.4 D.C machine Armature Winding

Armature winding of a D.C machine is always closed and of *double layer* type. Closed winding essentially means that all the coils are connected in series forming a closed circuit. The junctions of the consecutive coils are terminated on copper bars called commutator segments. Each commutator segment is insulated from the adjacent segments by mica insulation. For reasonable understanding of armature winding, let us first get acquainted with the following terminologies.

- A **coil** has two coil sides occupying two distinct specified slots. Generally two maximize induced voltage in a coil, the spacing between them should be close to 180° electrical. This essentially means if at a given time one coil side is under the center of the north pole, the other coil side should be under the center of the south pole.

- **Coil span** is nothing but the spacing between the two coil sides of a coil. The spacing is expressed in terms of number of slots between the sides. If S be the total number of slots and P be the total number of poles then coil span is S/P. For 20 slots, 4 poles winding, coil span is 5. Let the slots be numbered serially as 1, 2,…, 20. If one coil side is placed in slot number 3, the other coil side of the coil must occupy slot number 8 (= 3 + 5).

- **A Double layer winding** means that each slot will house two coil sides (obviously belonging to two different coils). Physically one coil side is placed in the lower portion of the slot while the other is placed above it. It is because of this reason such an arrangement of the winding is called a *double layer* winding. In the n th slot, coil side in the upper deck is numbered as n and the coil side in the lower deck is numbered as n'. In the 5th slot upper coil side is numbered as 5 and the lower coil side is numbered 5'. In the winding diagram, upper coil side is shown with firm line while the lower coil side is shown with dashed line.

  Remembering that a coil has two coil sides, for a double layer winding total number of coils must be equal to the total number of slots.

- **Numbering a coil:** A coil is so *shaped*, that when it is placed in appropriate slots, one coil side will be in the upper deck and the other side will be in the lower deck. Suppose $S = 20$ and $P = 4$, then coil span is 5. Let the upper coil side of this coil be placed in slot number 6, the other coil side must be in the lower deck of slot number 11. The coil should now be identified as (5 - 11'). In other words coil sides of a coil are numbered depending on the slot numbers in which these are placed. A typical single turn and multi turn coils are shown in figure 35.8

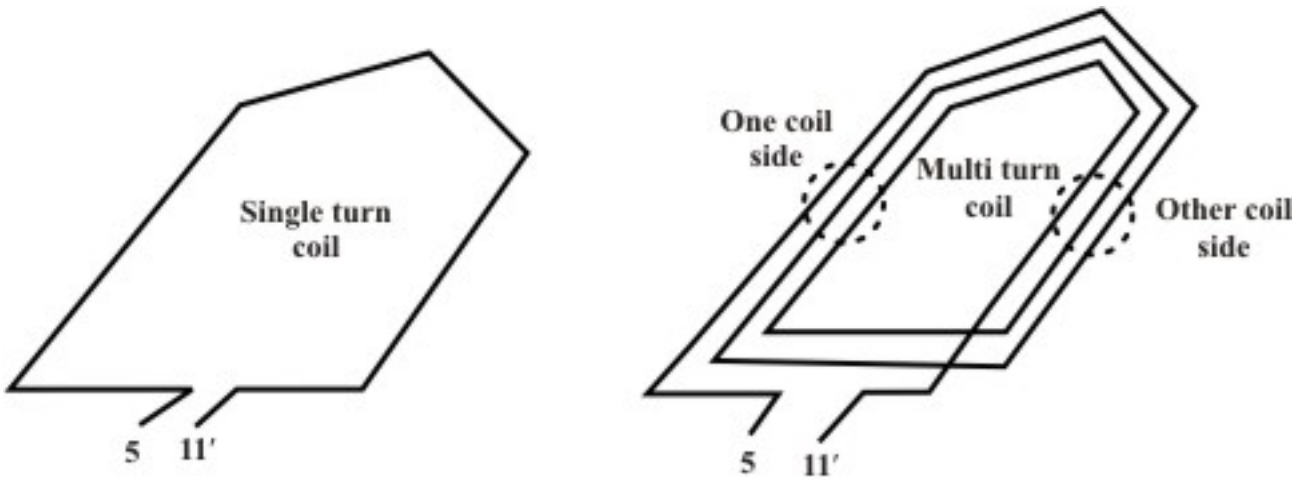

Figure 35.8: Single turn & Multi turn coil

- On a **Commutator segment** two coil sides (belonging to two different coils) terminate. 2*S* being the total number of coil sides, number of commutator segments must be equal to *S*, number of slots. Commutator segments can also be numbered as 1,2,…,20 in order to identify them clearly.

- **Commutator pitch:** As told earlier, the free ends of the coil sides of a coil (say, 6 – 11') are to be terminated on to two specific commutator segments. The separation of coil sides of a coil in terms of number of commutator segments is called the *commutator pitch,* y_c. In fact the value of y_c decides the types of winding (lap or wave) which will result. For example, in case of lap winding $y_c = 1$.

35.4.1 Armature winding: General procedure

1. Type of winding (lap or wave), total number of slots *S* and total number of poles *P* will be given.

2. Calculate coil span (≈ *S/P*).

3. Calculate commutator pitch y_c. For lap winding $y_c = \pm 1$ and for wave winding $y_c = \dfrac{2(S \pm 1)}{P}$.

4. We have to complete the windings showing the positions of coil sides in slots, interconnection of the coils through commutator segments using appropriate numbering of slots, coil sides and commutator segments.

5. Finally to decide and place the stationary brushes on the correct commutator segments.

35.4.2 Developed diagram

Instead of dealing with circular disposition of the slots and the commutator segments, it is always advantageous to work with the developed diagram of the armature slots and the commutator segments as elaborated in figure 35.9. In the figure 35.9, actual armature with 8 slots and 8 commutator segments are shown.

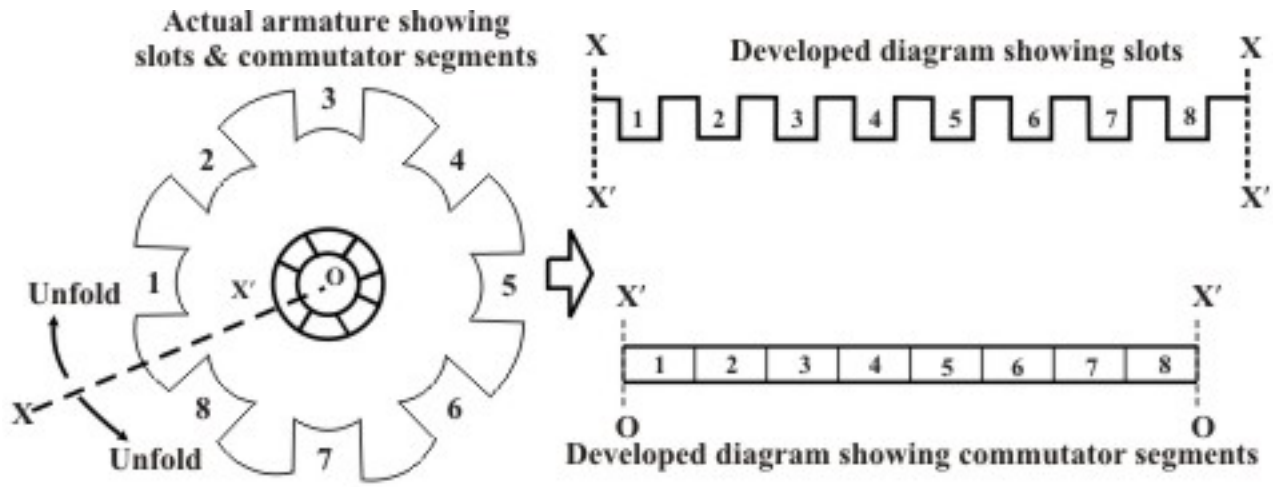

Figure 35.9: Actual and developed diagram of armature and commutator segments

Imagine the structure to be cut radially along the line *XX'O* and unfolded along the directions shown to make it straight. It will result into straight and rectangular disposition of the slots and commutator segments.

35.5 Lap winding

Suppose we want to make a lap winding for a $P = 4$ pole D.C machine having a total number slots $S = 16$. So coil span is 16/4 = 4. Commutator pitch of a progressive lap winding is $y_c = +1$. In figure 35.9 only the slots and commutator segments are shown in which it is very difficult to show the coil sides and hence coil connections. To view the coil sides / coils, we must look below from above the slots as depicted in figure 35.10. Once we number the slots, the numbering of the coil sides gets fixed and written. The upper coil side present in slot number 1 is shown by firm line and named 1 while lower coil side is shown by a dashed line (just beside the upper coil side) and named as 1'.

Let us now see how coils can be drawn with proper termination on the commutator segments. Since the coil span is 4, the first coil has sides 1 and 5' and the identification of the coil can be expressed as (1 - 5'). Let us terminate coil side 1 on commutator segment 1. The question now is where to terminate coil side 5'? Since the commutator pitch y_c is +1, 5' to be terminated on commutator segment 2 (= y_c +1). In D.C armature winding all coils are to be connected in series. So naturally next coil (2 - 6') should start from commutator segment 2 and the coil side 6' terminated on segment 3 as shown in figure 35.11. It may be noted that in a lap winding there exist a single coil between any two consecutive commutator segments.

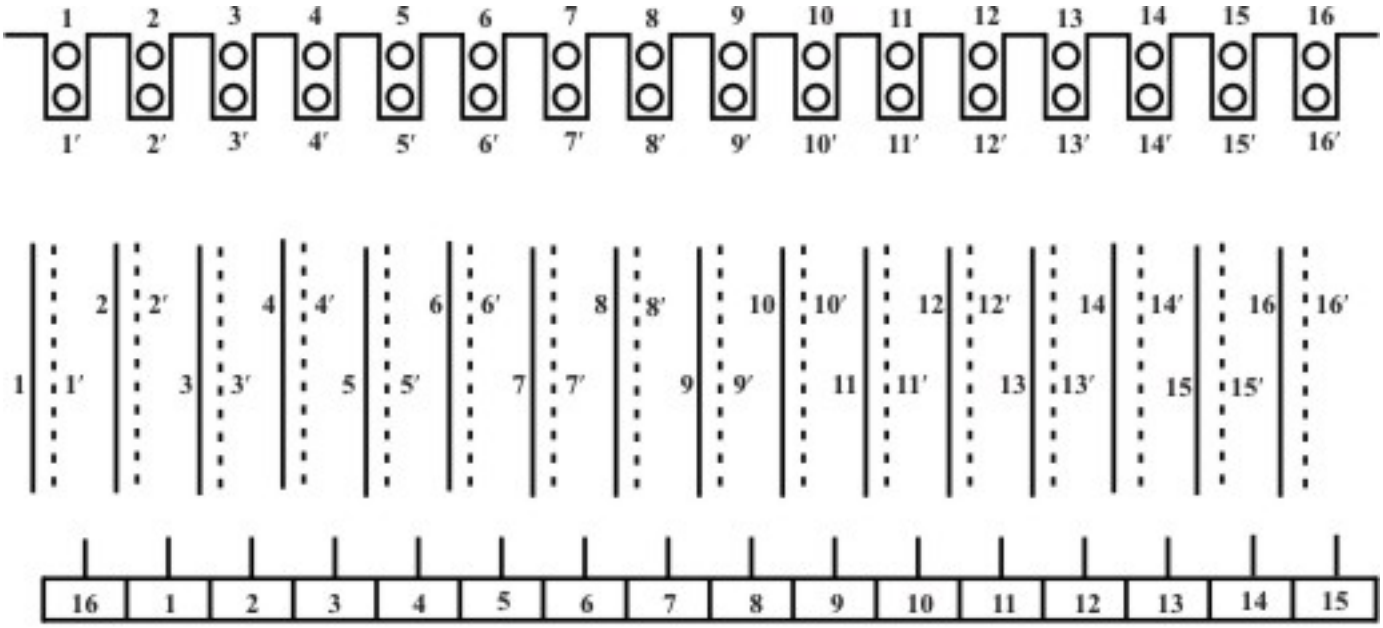

Figure 35.10: Developed diagram of the armature showing slots, coil sides & commutator segments

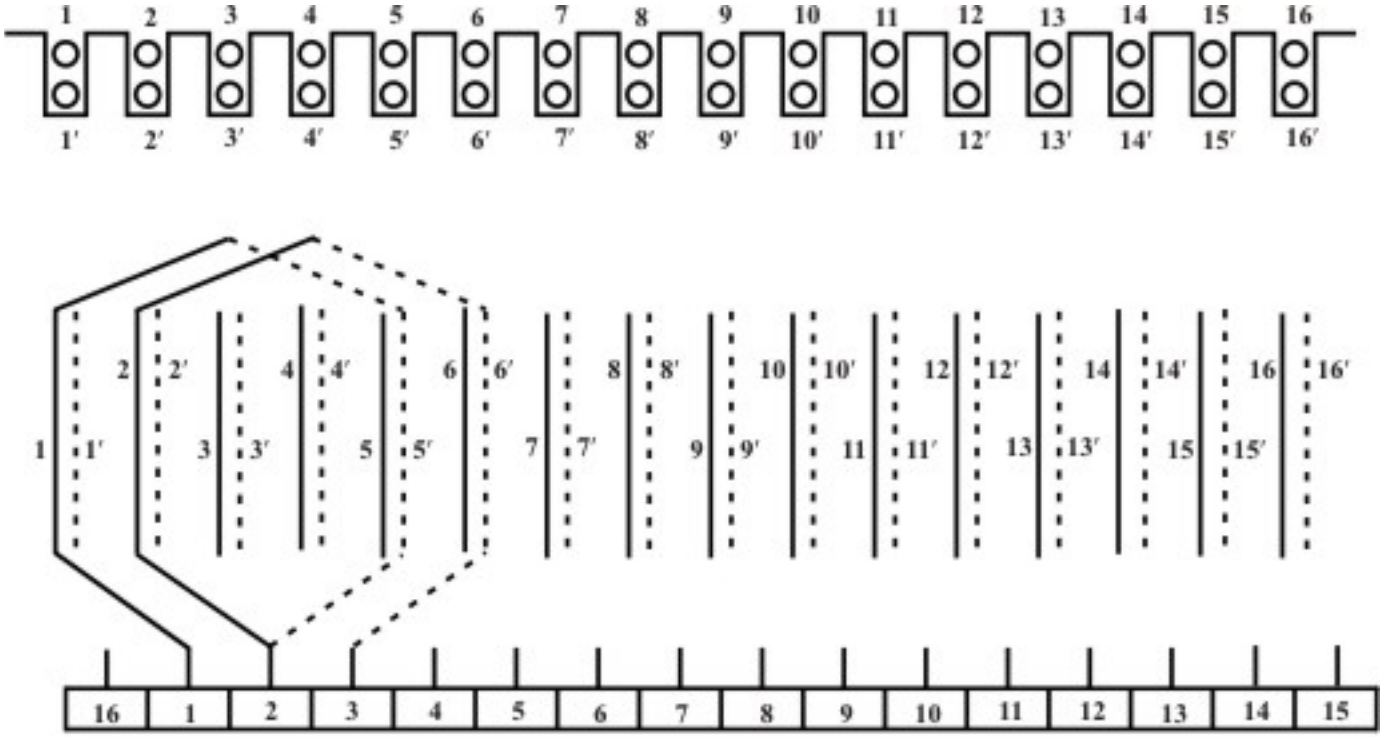

Figure 35.11: Starting a Lap winding

It can be seen that the second coil 2 - 6' is in the lap of the first coil 1 - 5', hence the winding is called *lap* winding. The winding proceeds from left to right due to our assumption that $y_c = +1$. Such a winding is called *progressive simplex lap* winding. It can be easily shown that if y_c is chosen to be -1, the winding would have proceeded from right to left giving rise to a

retrogressive lap winding. One can make first a winding table and then go for actual winding. By now it is clear that to go ahead with winding, two information are essential; namely the number of coil sides of a coil and the number of commutator segments where the free ends of the coil sides will be terminated. In a winding table (look at figure 35.12) these two information are furnished.

The complete progressive lap winding is shown in figure 35.13. To fix up the position of the brushes, let us assume the instant when slots 1,2,3 and 4 are under the influence of the north pole which obviously means slots 5 to 8 are under south pole, slots 9 to 12 are under north pole and slots 13 to 16 under south pole. The poles are shown with shaded areas above the active lengths (coil sides) of the coils. Considering generator mode of action and direction of motion from left to right (i.e., in clockwise direction of rotation of the cylindrical armature), we can apply right hand rule to show the directions of emf in each coil side by arrows as shown in figure 35.13. EMF directions are also shown in the simplified coil connections of the figure 35.12. The emfs in the first four coils (1 - 5', 2 - 6', 3 - 7' and 4 - 8') are in the clockwise directions with 8' +ve and 1 -ve. In the same way, 5 is +ve, 12' is –ve; 16' is +ve and 9 is –ve; 13 is +ve and 4' is –ve. Therefore, two +ve brushes may be placed on commutator segment numbers 5 and 13. Two numbers of –ve brushes may be placed on commutator segment numbers 1 and 9. Two armature terminals A_2 and A_1 are brought out after shorting the +ve brushes together and the –ve brushes together respectively. Thus in the armature 4 parallel paths exist across A_2 and A_1. Careful look at the winding shows that physical positions of the brushes are just below the center of the poles. Also worthwhile to note that the separation between the consecutive +ve and the –ve brushes is one pole pitch (16/4 = 4) in terms of commutator segments.

Coils	Commutator segments where the coil ends terminated
1 - 5′	1 , 2
2 - 6′	2 , 3
3 - 7′	3 , 4
4 - 8′	4 , 5
5 - 9′	5 , 6
6 - 10′	6 , 7
7 - 11′	7 , 8
8 - 12′	8 , 9
9 - 13′	9 , 10
10 - 14′	10 , 11
11 - 15′	11 , 12
12 - 16′	12 , 13
13 - 1′	13 , 14
14 - 2′	14 , 15
15 - 3′	15 , 16
16 - 4′	16 , 1

(a) Winding Table

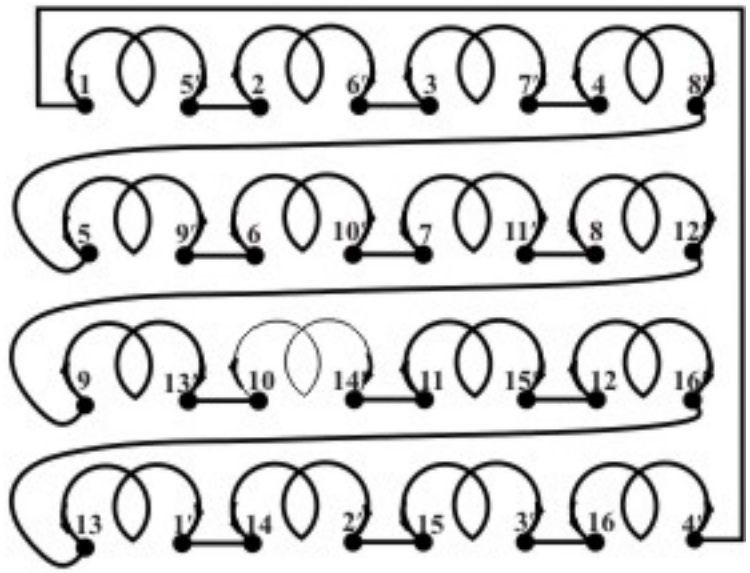

(b) Simplified representation of the coil connection

Figure 35.12: Winding table and coil connections

In fact for a P polar machine using lap winding, number of parallel paths a = P. Will it be advisable to put only a pair of brushes in the armature? After all a pair of brushes will divide the armature into two parallel paths.

Let, the total number of slots	=	S
The total number of poles	=	P
$\therefore$ Total no. of commutator segments	=	S
Total no. of coils	=	S $\because$ double layer winding
No. of coils between two consecutive commutator segments	=	1 $\because$ simplex lap winding
Number of commutator segments between consecutive +ve and –ve brushes	=	S/P
$\therefore$ Number of coils between the +ve and –ve brushes	=	S/P

If only a pair of brushes is placed, then armature will be divided in to two parallel paths consisting of S/P coils in one path and $(P-1)\frac{S}{P}$ coils in the other path. So current distribution in the paths will be unequal although emf will be same. A little consideration shows another pair of brushes can be put (figure 35.13) producing 4 identical parallel paths. Therefore, in a lap winding number of brushes must always be equal to the number of poles. Lap winding is adopted for low voltage, high current D.C Machines.

35.5.1 Another example of Lap winding

In figure (35.14), a 4-pole, lap winding for d.c machine armature is presented with 8 numbers of slots. Armature winding of a d.c machine is *double layer type* which means that in each slot there will be two coil sides present. The *upper coil sides* are numbered as 1, 2, 3…8 and the *lower coil sides* are marked as 1', 2', 3' ….8'. Number of commutator segments are 8 and they are also numbered as 1,2,3…8. Since two coil sides make a single coil and each slot is housing two coil sides, number of total coils that can be accommodated is also 8 (= number of slots). It may be noted that coil ends of first, second, third,…eight coils are respectively, 1 - 1', 2 - 2', 3 - 3'…8 - 8'. The spatial distance between two coil sides of a coil should be *one pole pitch* apart. Now number of slots per pole is $\frac{8}{4} = 2$. Coil side 1 of the first coil is put in slot number 1 and its other coil side 1' is placed in slot number 3. The ends of the first coil 1 and 1' are terminated to commutator segments 1 and 2 respectively. In the same way coil sides 2 and 2' of the second coil are placed in slot numbers 2 and 4 respectively. Also its coil ends 2 and 2' are terminated on commutator segments 2 and 3 respectively. Between commutator segments 1 and 3 we find that first and second coils are present and they are series connected by virtue of the termination of the ends 1' (of first coil) and 2 (of second coil) on the same commutator segment 2. In the same fashion one can complete the connection of the third, fourth, … eighth coil. End 8' of the eighth coil is finally terminated on commutator segment 1 where one end of the first coil was terminated at the beginning. Thus we see that all the coils are connected in series via commutator segments in a closed circuit.

To fix up the position of the brushes consider an instant when there are two slots under each pole and the armature is rotating in the clock wise direction. By applying right hand rule, we can find out the direction of the emfs induced in the conductors (i.e., $\odot$ or $\otimes$). In order to show the direction of emfs in the coils more clearly, the coils have been shown spread out off the slots like petals in the figure (35.14). If you start from any of the commutator segments and trace all the coils you will encounter as many clock wise arrows as the number of anti clockwise arrows. Which simply confirms that total emf acting in the loop is zero. Now the question is where to put the brushes? In commutator segments 8 and 4 arrows converge indicating 2 brushes are to be placed there. These two

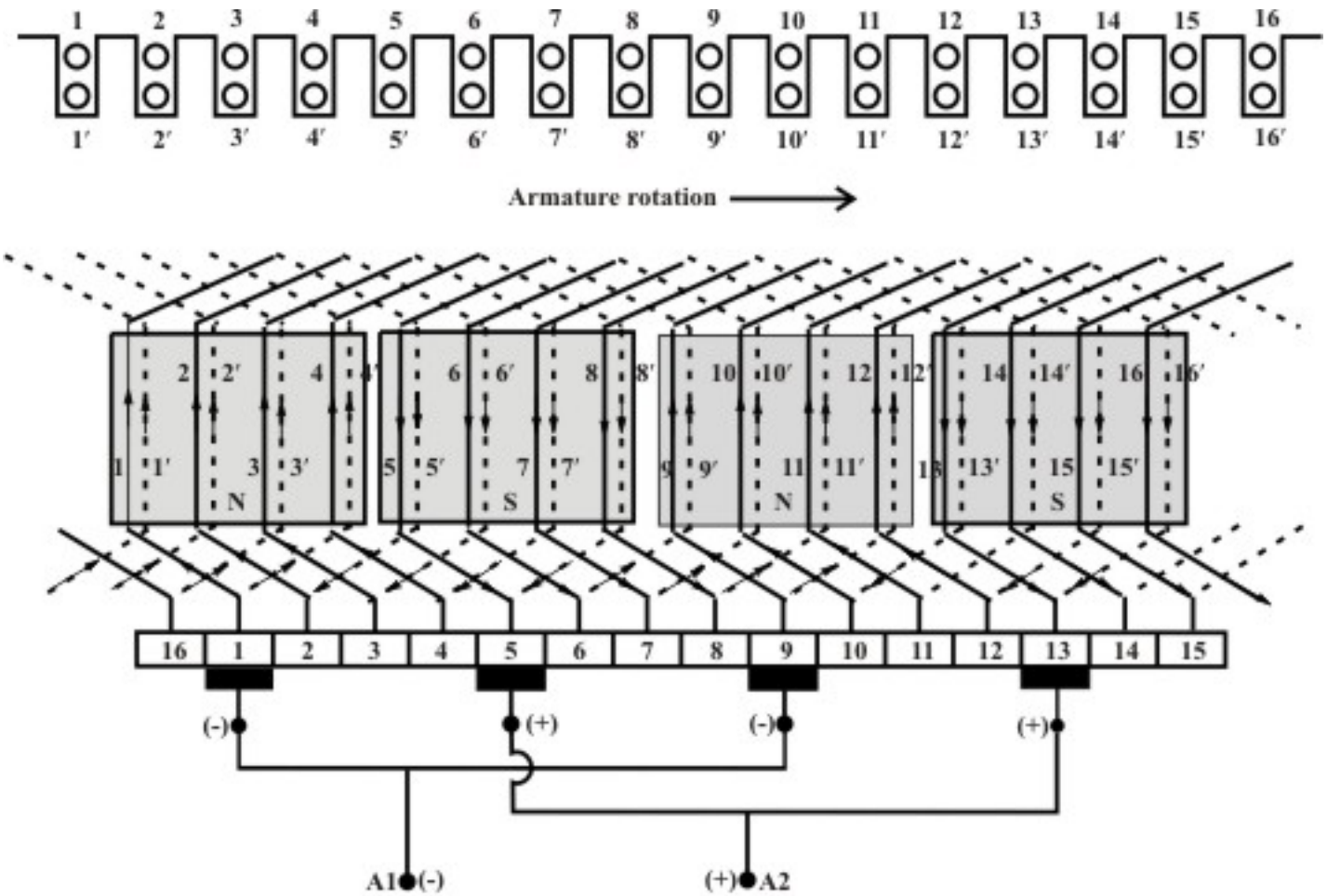

Figure 35.13: Complete simplex progressive lap winding

brushes externally joined together to give +ve armature terminal of the generator. Similarly two brushes should be placed on segments 2 and 6 and joined together to give –ve terminal of the generator. It is quite obvious now that across the armature terminals of the d.c generator 4 parallel paths exist. In general for a p polar machine number of parallel paths a, will be equal to the number poles p. Parallel paths and the coils with polarity of voltages are shown in the simplified diagram in figure (35.15). Since lap winding provides more number of parallel paths, this type of winding is employed for large current and low voltage d.c machines.

For clarity each coil in the armature is shown to have *single turn* in figure (35.14).

35.6 Wave winding

In this winding these coil sides of a coil is not terminated in adjacent commutator segments, i.e., $y_c \neq 1$. Instead y_c is selected to be closely equal to *two pole pitch* in terms of commutator segments. Mathematically $y_c \approx 2S/P$. Let us attempt to make a wave winding with the specifications $S = 16$ and $P = 4$. Obviously, coil span is 4 and $y_c = 8$.

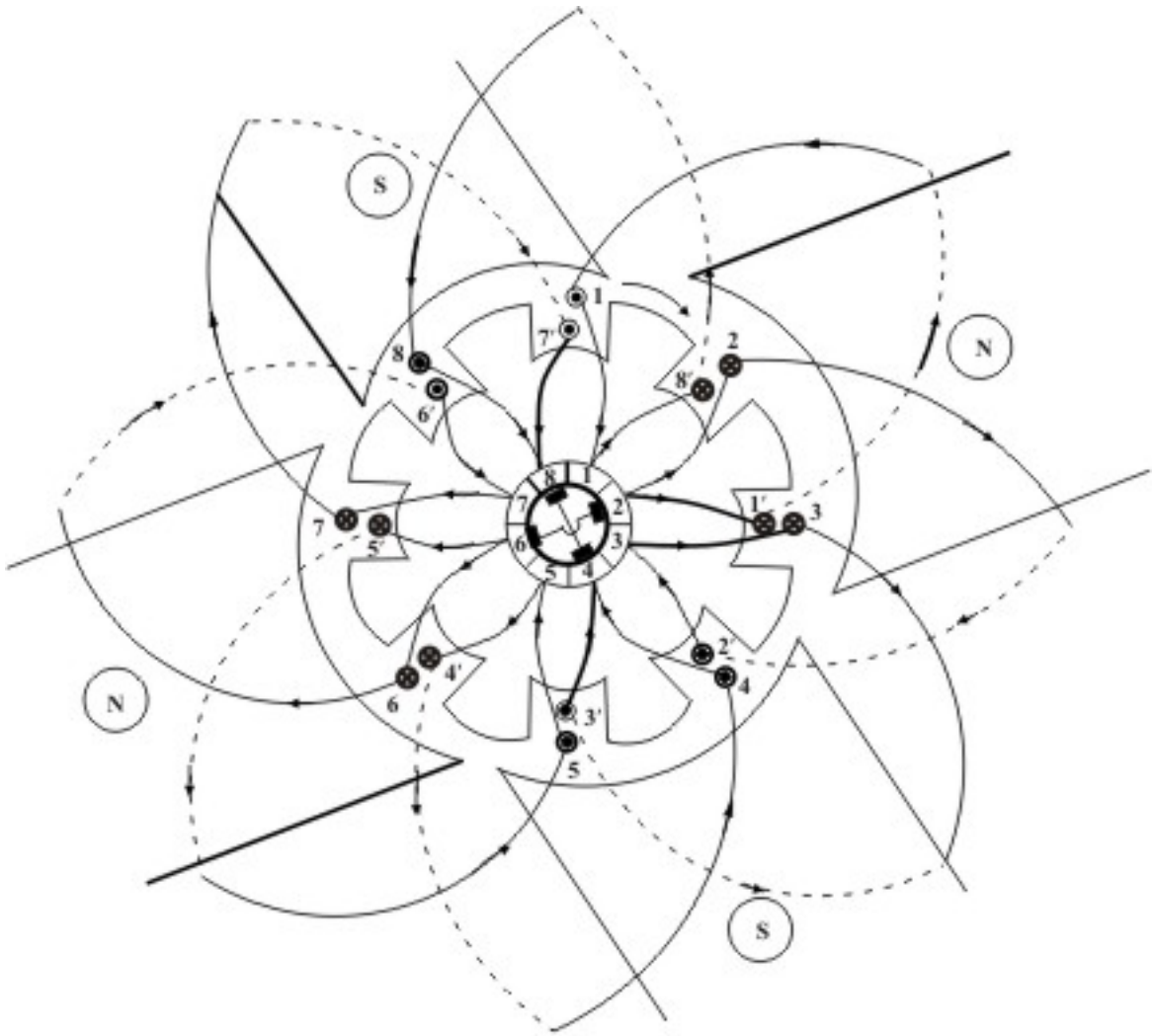

Figure 35.14: Lap winding, polar diagram

The first coil is (1 - 5') and is terminated on commutator segments 1 and 9. The second coil (9 - 13') to be connected in series with the first and to be terminated on commutator segments 9 and 1 (i.e., 17'). Thus we find the winding gets closed just after traversing only two coils and it is not possible to carry on with the winding. Our inability to complete the wave winding will persist if $2S$ remains a multiple of P. It is because of this reason expression for commutator pitch y_c, is modified to $y_c = 2(S \pm 1)/P$. In other words, number of slots, should be such that $2(S \pm 1)$ should be multiple of P. It can be shown that if +ve sign is taken the result will be a *progressive wave* winding and if –ve sign is taken the result will be *retrogressive wave winding*.

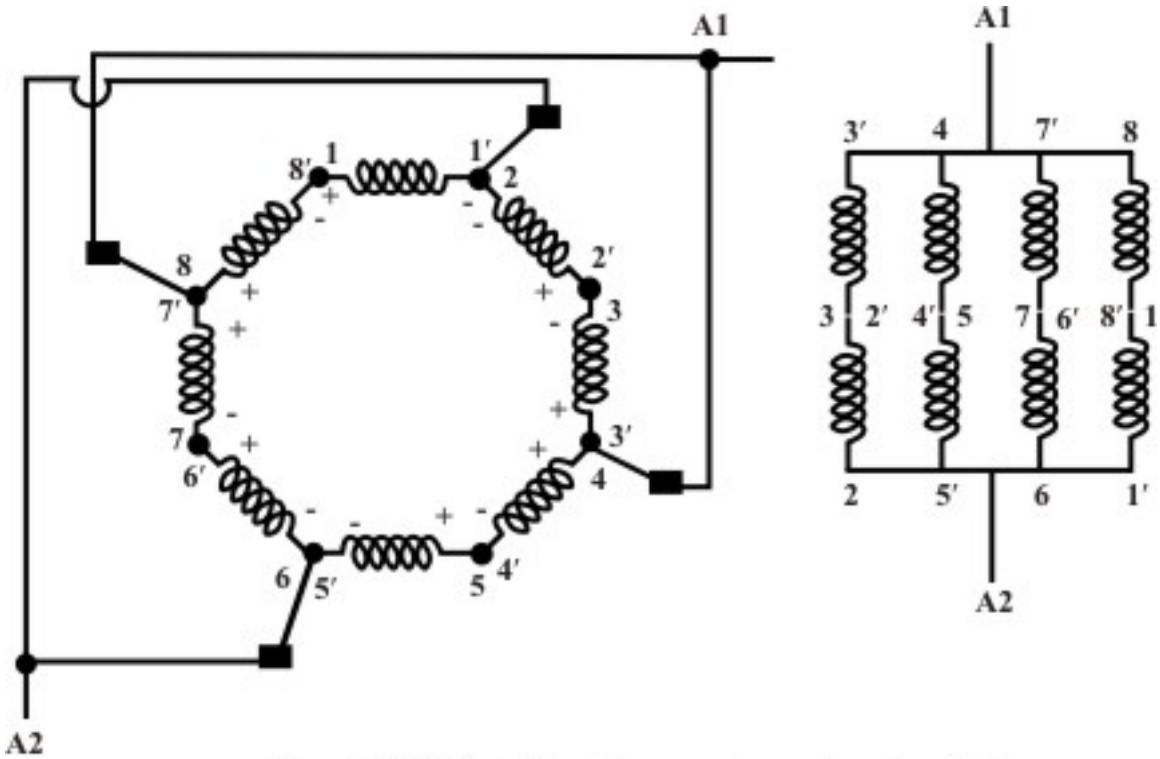

Figure 35.15: Parallel paths across armature terminals

35.6.1 An example

We have seen that for 4-pole wave winding, choice of $S = 16$ is no good. Let us choose number of slots to be 17 and proceed as follows:

No. of poles, P	=	4
No. of slots, S	=	17
Winding pitch, y_c	=	$2(S+1)$ / P choosing +1 for progressive winding
$\therefore y_c$	=	$2(17 + 1) / 4 = 9$
Coil span	=	$S / P \approx 4$

Once coil span and the commutator pitch y_c are calculated, *winding table*, shown in figure 35.16(a) can be quickly filled up. Series connection of all the coils are also shown in figure 35.16(b). Directions of induced emfs are shown after assuming slots 1 to 4 and 9 to 12 to be under north pole; slots 5 to 8 and 13 to 16 to be under south pole. Since *S/P* is not an integer slot 17 has been assumed to be in the neutral zone. It is interesting to note that polarity of the induced emf reverses after nearly half of coils are traversed. So number of armature circuit parallel paths are two only. It is because of this reason wave winding is preferred for low current, large voltage d.c machines.

Coils	Commutator segments where the coil ends terminated
1 - 5′	1 , 10
10 -14′	10 , 2
2 - 6′	2 , 11
11 - 15′	11 , 3
3 - 7′	3 , 12
12 - 16′	12 , 4
4 - 8′	4 , 13
13 - 17′	13 , 5
5 - 9′	5 , 14
14 - 1′	14 , 6
6 - 10′	6 , 15
15 - 2′	15 , 7
7 - 11′	7 , 16
16 - 3′	16 , 8
8 - 12′	8 , 17
17 - 4′	17 , 9
9 - 13′	9, 1

(a) Winding Table

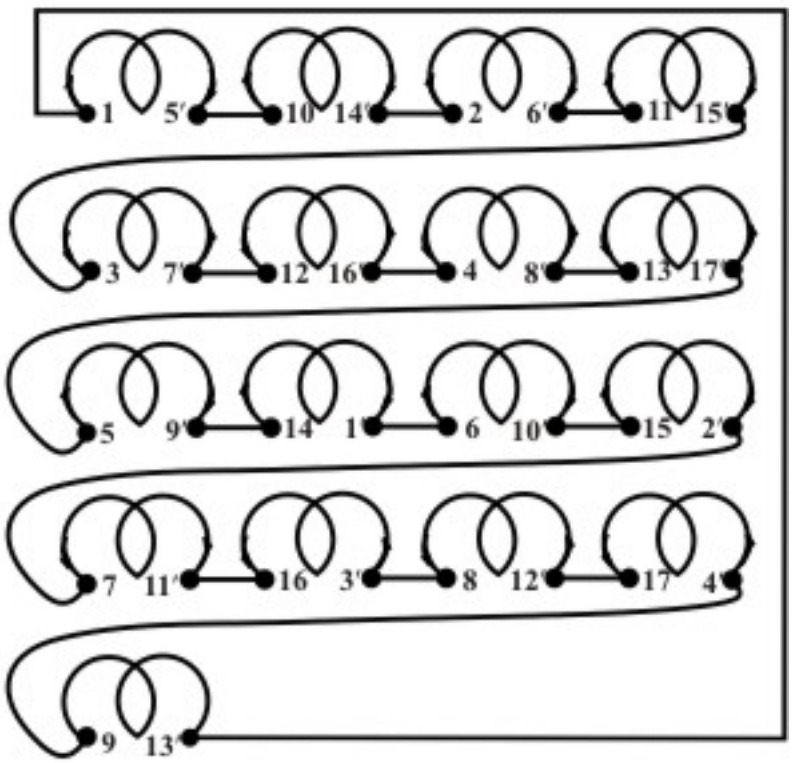

(b) simplified representation of the coil connections
+ve brush may be placed on comm. seg. 13 (and/or5)
+ve brush may be placed on comm. seg. 9 (and/or 17)

Figure 35.16: Wave winding table and coil connections

In figure 35.17 are shown only two coils to explain how winding proceeds. Important thing to be noted from this figure is that the first coil (1 - 5') starts from commutator segment one and ends on commutator segment 10, where from the second coil (10 - 14') starts and finally gets terminated on commutator segment 2. In other words between any two consecutive commutator segments 2 coils are present. This statement can be generalized as: for a P polar simplex wave winding, *between any two consecutive commutator segments $P/2$ coils will be present*. A look at those two coils suggest that the winding progresses like a wave – hence the name wave winding. Figure 35.18 shows the completed wave winding where the directions of induced emfs in the coil sides are also shown.

That the number of parallel paths in a simplex wave winding is always 2 can be established mathematically as follows.

$$\text{Let, the total number of slots} = S$$
$$\text{The total number of poles} = P$$
$$\therefore \text{ total no. of commutator segments} = S$$
$$\text{Total no of coils} = S \because \text{ double layer winding}$$

No. of coils between two consecutive commutator segments = $P/2$ ∵ simplex wave winding

Number of commutator segments between consecutive +ve & -ve brushes = S/P

∴ Number of coils between the +ve & -ve brushes = $(S/P) \times (P/2)$

= $S/2$

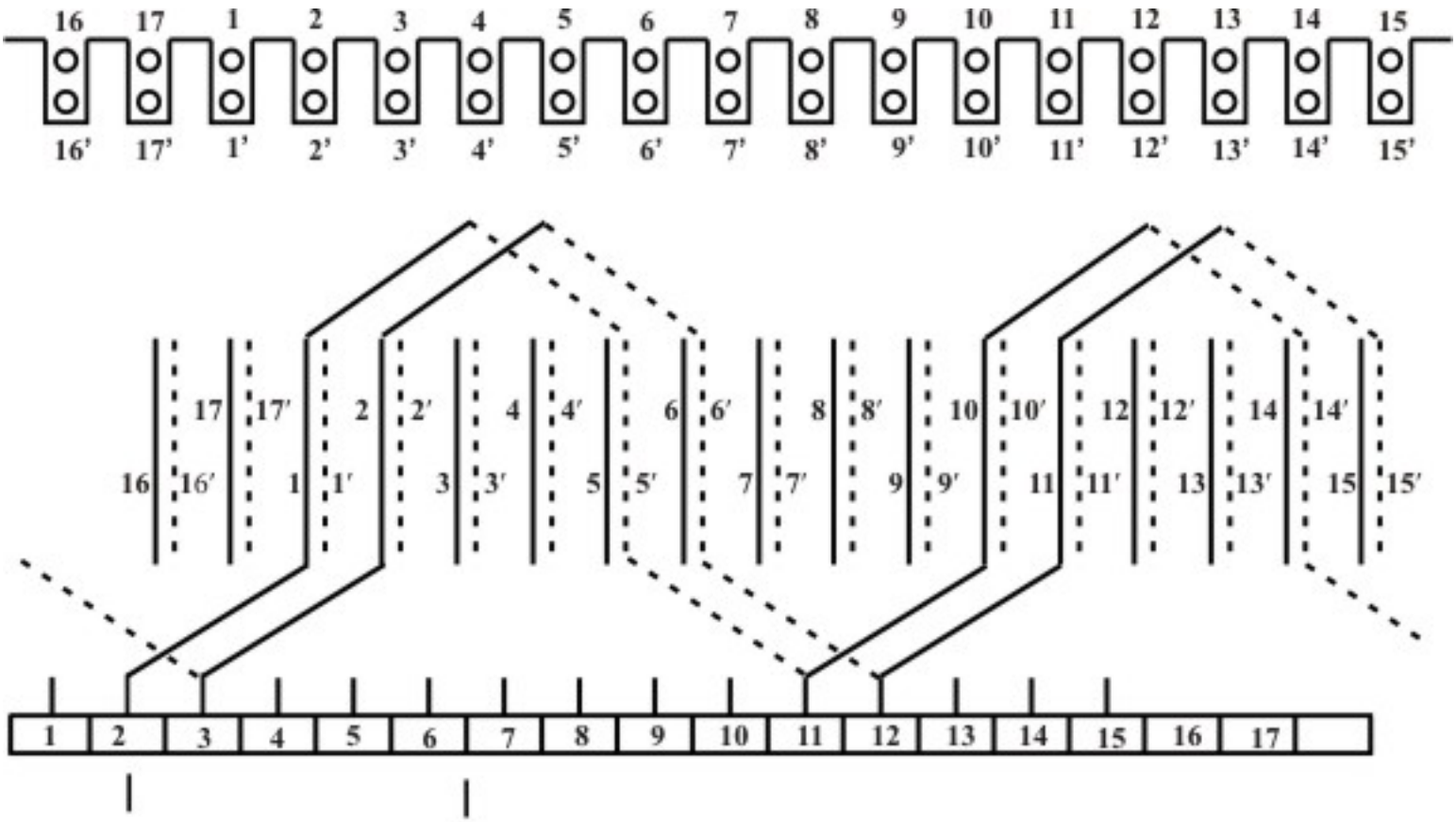

Figure 35.17: Starting a simplex progressive wave winding

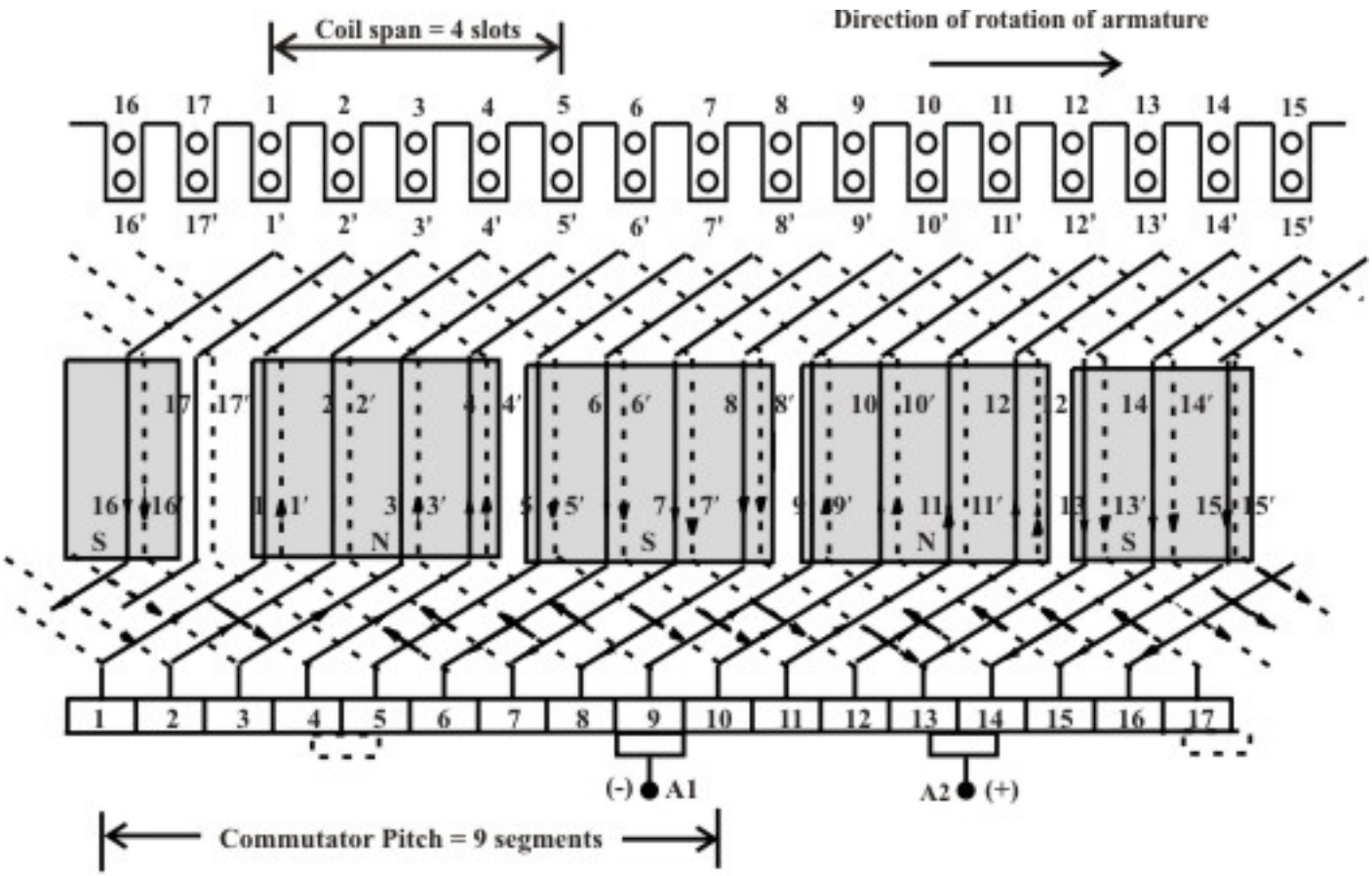

Figure 35.18: Complete simplex progressive wave winding

Thus, a pair of brush divides the armature into two parallel paths. From the direction of emfs –ve brush can be placed on commutator segment 9 and the +ve brush can positioned touching commutator segments 13 and 14. In a wave winding since number of parallel paths are 2, theoretically a pair of brushes is sufficient for armature independent of the number of poles of the machine. However for relatively large armature current one can put additional brushes such that total number of brushes are equal to *P* thereby reducing the size of the brushes. For the 4 polar winding that we are considering, additional +ve brush can be placed over commutator segments 4 and 5 and another –ve brush can be placed over commutator segments 17 and 1 as shown with dotted boxes in figure 35.18.

35.7 Answer the following

1. What is the difference between a *single turn coil* and a *multi turn* coil?

2. What type of insulation is used between two consecutive commutator segments?

3. Clearly identify which of the following items are rotating and which of them are stationary.
   (a) Field coil, (b) armature, (c) commutator segments and (d) carbon brushes.

4. For 6 polar D.C machine armature has 36 number of slots and the type of winding is a double layer simplex lap winding.
    a. How many coils are present?
    b. What is the coil span in terms of number of slots?
    c. If each coil has 4 turns, then what is the total number of armature conductors presents?
    d. How many parallel paths will be their in the armature?
    e. Altogether how many brushes will be their?

5. For 4 pole d.c machine armature winding with a double layer progressive simplex wave winding with 23 number of slots answer the following:

    a How many coils are present?
    b What is the coil span in terms of number of slots?
    c What is commutator pitch in terms of commutator segments?
    d How many coils are there between two consecutive commutator segments?
    e How many parallel paths are present?

Module 9

DC Machines

Lesson 36

Principle of Operation of D.C Machines

Contents

36 Principle of operation of D.C machines (Lesson-36) 4

36.1 Introduction ……..... 4

36.2 Example of Single conductor Generator & Motor …….. 4

36.3 Rotating Machines ……... 9

36.3.1 Driving & Opposing torques …… 10

36.3.2 Generator mode …… 10

36.3.3 Motor mode …….. 11

36.4 Condition for steady production of torque …….. 11

36.5 D.C generator: Basic principle of operation …… 13

36.6 D.C motor: Basic principle of operation ……. 13

36.7 Answer the following …….. 14

36.1 Introduction

In the first section of the lesson we consider an example using a single conductor to behave as a generator or as a motor. Although the motion of the conductor is rectilinear, the example brings out several useful facts which are true for rotating machines as well.

The following sections begin by giving some important information which are true for *all most all kinds* of rotating electrical machines. It is first explained that two torques namely the driving torque and the load torque will exist during the operation of the machine both as generator and motor. After going through the lesson one will understand:

1. the meaning of loading of generator and motor.
2. that motoring & generating actions go side by side.
3. the dynamics involved while the operating point moves from one steady state condition to another.

36.2 Example of Single conductor Generator & Motor

1. **Generator Mode:** Consider a straight conductor of *active length* (the length which is under the influence of the magnetic field) l meter is placed over two friction less parallel rails as shown in the figure 36.1. The conductor is moving with a constant velocity v meter/second from left to right in the horizontal plane. In the presence of a vertical magnetic field directed from top to bottom of strength B Wb/m^2, a voltage $e = Blv$ will be induced across the ends of the moving conductor. The magnitude of the voltage will be constant and the polarity will be as shown in the figure 36.2. In other words the moving conductor has become a seat of emf and one can replace it by battery symbol with an emf value equal to Blv Volts.

   At no load i.e., (resistance in this case) is connected across the moving conductor, output current hence output power is zero. Input power to the generator should also be zero which can also be substantiated by the fact that no external force is necessary to move a mass with constant velocity over a frictionless surface. The generator is said to be under no load condition. Let us now examine what is going to happen if a resistance is connected across the source. Obviously the conductor starts delivering a current $i = \frac{e}{R}$ the moment resistance is connected. However we know that a current carrying conductor placed in a magnetic field experiences a force the direction of which is decided by the *left hand rule*. After applying this rule one can easily see that the direction of this electromagnetic force will be opposite to the direction of motion i.e., v. As told earlier that to move the conductor at constant velocity, no external force hence prime mover is not necessary. Under this situation let us assume that a load resistance R is connected across the conductor. Without doing any mathematics we can purely from physical reasoning can predict the outcome.

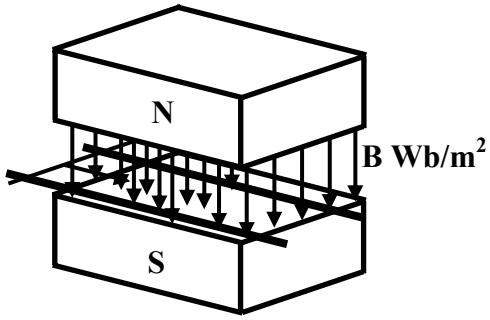

Figure 36.1: Elementary Generator

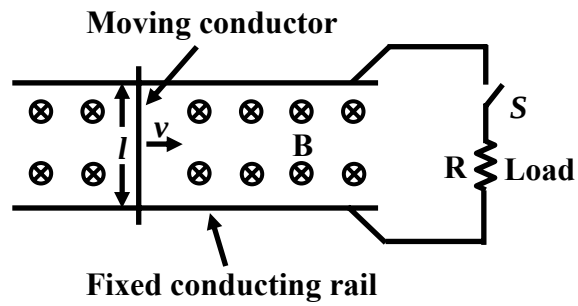

Figure 36.2: Top view of figure 36.1

The moment load is connected, the conductor starts experiencing a electromechanical force in the opposite direction of the motion. Naturally conductor starts decelerating and eventually comes to a stop. The amount of energy dissipated in the load must have come from the kinetic energy stored in the conductor.

Let us now Analyse the above phenomena mathematically. Suppose,

v_0 = linear velocity of the conductor in meter/sec under no load condition.

t = 0, is the instant when the load is switched on.

v = linear velocity of the conductor in meter/sec at any time t.

l = length of the conductor in meters.

m = mass of the conductor in Kg.

B = flux density in Wb/meter sq.

e = Blv, induced voltage at any time, t.

R = load resistance in Ω.

i = $\frac{e}{R}$, current in A at any time, t.

F_e = Bil, electromagnetic force in opposite direction of motion, at time, t. (36.1)

The dynamic equation of motion of the conductor can be written by using Newton's law of motion as follows:

$$m\frac{dv}{dt} = -F_e = -Bil = -Bl\left(\frac{Blv}{R}\right)$$

$$m\frac{dv}{dt} + \frac{B^2l^2}{R}v = 0$$

$$\frac{dv}{dt} + \frac{B^2l^2}{mR}v = 0 \text{ dividing both sides by } m. \qquad (36.2)$$

Solving this linear simple first order differential equation and applying the boundary condition that at $t = 0$, $v = v_0$ we get the expressions for velocity, emf and current as a function of time.

$$
\begin{aligned}
v &= v_0 e^{-\frac{B^2l^2}{mR}t} \\
e &= Blv_0 e^{-\frac{B^2l^2}{mR}t} \\
i &= \frac{Blv_0}{R} e^{-\frac{B^2l^2}{mR}t}
\end{aligned} \tag{36.3}
$$

From the above we see that in absence of any external agency for motive power, the velocity and current decreases exponentially with a time constant $\tau = \frac{mR}{B^2l^2}$ down to zero, as shown in the figure 36.3. We can easily calculate the amount of energy W_R dissipated in R and show the same to be equal to the initial kinetic energy $\left(\frac{1}{2}mv^2\right)$ by carrying out the following integration.

$$W_R = \int_0^\infty i^2 R dt = \frac{1}{2}mv^2 \tag{36.4}$$

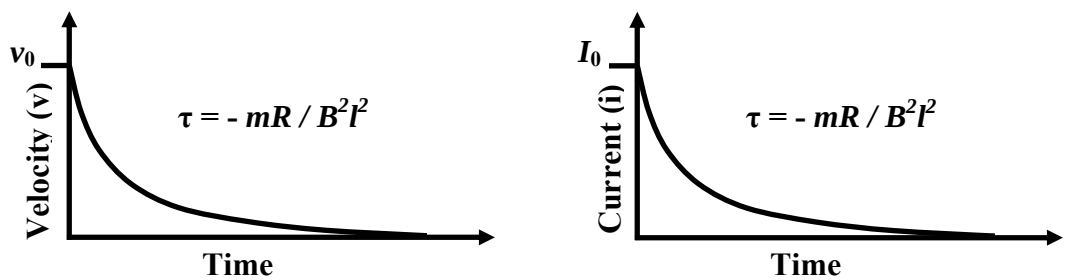

Figure 36.3: Velocity and Current variation

Thus for sustained generator operation some external agency (prime mover) must apply a force in the direction of motion to counter balance opposite electromagnetic motoring force. Under such situation, for a particular steady load current, the conductor can move with constant velocity maintaining sustained generator operation. Power delivered to the load comes from the external agency (prime mover) as it is doing work against the opposing electromagnetic force.

A Numerical Example

A single conductor generator of 2 m active length and zero resistance (as explained above) is found to deliver power to a 5 Ω load resistance. The generator is found to move with a constant velocity of 5m/sec under the influence of a magnetic flux density of 1.1 wb/m^2. Calculate the voltage impressed across the load and current supplied to it. Also calculate the force exerted by the mechanical external agency and the mechanical power supplied to it.

Solution

Here,

$$
\begin{aligned}
B &= 1.1 \text{ wb/m}^2 \\
l &= 2 \text{ m} \\
v &= 5 \text{ m/sec}
\end{aligned}
$$

$$
\begin{aligned}
\text{voltage generated } e &= Blv \\
&= 1.1 \times 2 \times 5 \\
\therefore e &= 11 \text{ V} \\
\text{voltage across the load} &= 11 \text{ V} \\
\text{current in the load and generator, } I &= 11/5 = 2.2 \text{ A} \\
\text{Power supplied to the load resistance, } P_R &= 2.2^2 \times 5\text{W} \\
\text{electromagnetic force developed in the generator, } F_e &= 4.84 \text{ N}
\end{aligned}
$$

It may be noted that $F_e = 4.84$ N acts in a direction opposite to the direction of motion. But as the conductor is moving with a constant velocity, the external agency must be applying a mechanical force of $F_m = 4.84$ N in the direction of motion. The mechanical power input to the generator is $P_m = F_m v = 4.84 \times 5 = 24.2$ W. So $P_R = P_m$ is not surprising as we have assumed that there is no power loss in the generator.

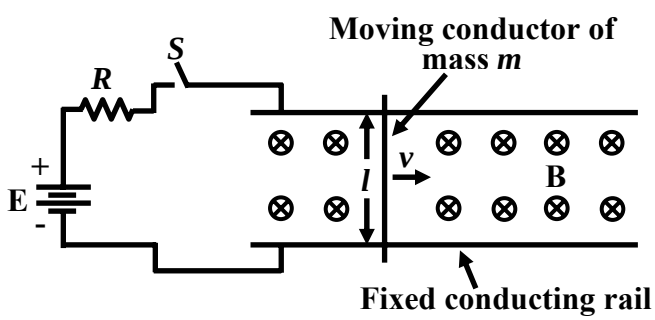

Figure 36.4: Top view during motor mode

2. **Motor Mode:** The same arrangement can be used to demonstrate motoring action as shown in figure 36.4
   Suppose the conductor is initially stationary, and battery of emf E is connected across it through a resistance R. Obviously the current right at the time of connecting the battery i.e., at $t = 0$, is $I = \frac{E}{R}$. As the current carrying conductor is placed in a magnetic field it will experience a force BIl and the conductor will start moving. However when the conductor starts moving a voltage is induced across the conductor the polarity of which will be such so as to oppose the inflow of current into the conductor. Therefore with time both the value of the current and the electromagnetic torque will decrease. To answer what will happen finally to the current and the speed of the conductor, we shall write the following electrodynamic equation and solve them.

t = 0, is the instant when the battery is switched on.

v = linear velocity of the conductor in meter/sec at any time t.

l = length of the conductor in meters.

m = mass of the conductor in Kg.

B = flux density in Wb/meter sq.

e = Blv, induced voltage at any time, t.

R = resistance connected in series with the battery Ω.

$i = \dfrac{E - e}{R}$, current in A at any time, t.

$F_e = Bil$, electromagnetic force causing motion, at time, t. (36.5)

The equations of motion in case of generator mode are as follows:

$$m\frac{dv}{dt} = F_e = Bil = Bl\left(\frac{E - Blv}{R}\right)$$

$$m\frac{dv}{dt} + \frac{B^2l^2}{R}v = \frac{BlE}{R}$$

$$\frac{dv}{dt} + \frac{B^2l^2}{mR}v = \frac{BlE}{mR} \quad \text{dividing both sides by } m. \qquad (36.6)$$

Solving the above equation with the boundary condition, at $t = 0$, $v = 0$, the expressions for velocity and current are obtained as follows:

$$v = \frac{E}{Bl}\left(1 - e^{-\frac{B^2l^2}{mR}t}\right)$$

$$e = Blv = E\left(1 - e^{-\frac{B^2l^2}{mR}t}\right)$$

$$i = \frac{E - e}{R} = \frac{E}{R}e^{-\frac{B^2l^2}{mR}t} \qquad (36.7)$$

The figures 36.5 and 36.6 show the variation of current, velocity and emf induced in the conductor under motor mode condition.

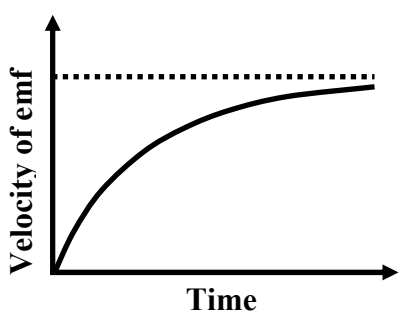

Figure 36.5: Variation of Velocity or emf.

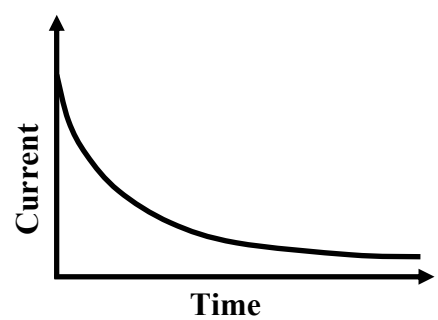

Figure 36.6: Variation of current.

The final current and speed in steady state will be 0 A and $v_0 = E/Bl$ m/sec. The current drawn from the supply becomes zero because battery voltage E is exactly balanced by the induced voltage in the conductor. This induced voltage in the conductor is called the back emf E_b. In this steady operating condition, note that $E_b = Blv_0 = E$. Both power drawn from the supply and mechanical output power will be zero. This is the no load steady operating point with $i = 0$ A and $v_0 = E/Bl$ m/sec.

Let us now investigate what will happen to the current and speed if a opposing force is present. Imagine the track ahead is not frictionless but offers a constant frictional force F_f. Let us start counting time afresh such that at $t = 0$ the conductor enters the frictional track. Due to inertia of the conductor speed can not change instantaneously i.e., at $t = 0^+$, $v = v_0$ which means $i\ (0^+)$ is also zero since $E_b\,(0^+) = E$. So at $t = 0^+$ no electromagnetic force acts on the conductor. Therefore velocity of the conductor must now start decreasing as F_f acts opposite to the direction of motion. But the moment v becomes less than v_0, E_b too will become less than E. Therefore the conductor will draw now current producing a driving force in the direction of motion. This dropping of speed and drawing more current from the battery will continue till the current magnitude reaches such a value which satisfies $F_e = BIl = F_f$. Obviously, the conductor draws a new steady state current of $I = F_f/Bl$. Similarly new steady speed can be calculated from the KVL equation

$$\begin{aligned} E_b + IR &= E \\ \text{or, } Blv + IR &= E \\ \text{or, } v &= (E - IR)/Bl \end{aligned}$$

One can of course write down a first order differential equation and solve it using the boundary condition mentioned above to know exactly how with time the initial current $i = 0$ changes to new steady state current I. Similarly expression for change of velocity with time, from initial value v_0 to the final steady value of $(E - IR)/Bl$ can easily be obtained.

It is however, **important to note** that one need not write and solve the differential equation to obtain steady state solution. Solution of algebraic equations, one involving force balance (driving force = opposing force) and the other involving voltage balance (KVL) in fact is sufficient.

36.3 Rotating Machines

In the previous section, we considered a single conductor moving with a velocity v along a straight track under the influence of a constant magnetic field throughout the track. This is certainly not a very attractive way of generating d.c voltage as the length of the generator becomes long(!) and one has to provide magnetic field all along the length. However, it brought out several important features regarding forces, current, back emf, steady and transient operation etc for both motor and generator operations.

Imagine that a straight conductor is glued on the surface of a cylinder structure parallel to the axial length of the cylinder. Let us also attach a shaft along the axis of the cylinder so that the structure is free to rotate about the shaft. In such a situation, the conductor will have rotational motion if the shaft is driven externally. Magnets (or electro magnets) can be fitted on a stationary structure producing radial magnetic fields as shown in the figure 36.7. The figure shows a sectional view with the shaft and the conductor perpendicular to the screen.

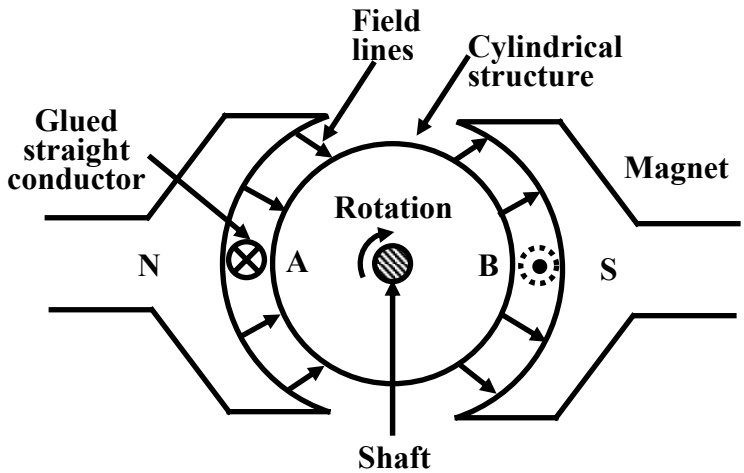

Figure 36.7: Single conductor rotating machine.

Thus, if the shaft is rotated at constant rpm, the conductor (glued to the surface of the cylinder) too will rotate at the same speed. In the process of rotation, the conductor will cut the lines of forces of magnetic field, in the same way as the straight conductor did in the linear version of the generator. Therefore, across the front end and the back end of the conductor, voltage will be induced. However, as the conductor moves, it some times cuts flux lines produced by N-pole and some other time it cuts flux lines produced by the south pole. The polarity of the induced voltage is therefore going to change. The sense of induced emf will be ⊗ when the conductor will be at position A (under the influence of north pole) and it will ⊙ when the conductor will be at position B (under the influence of the south pole). But we have already seen in the previous lesson, that this voltage can be made unidirectional by using commutator segments and brushes. The greatest advantage is that, the rotating machine now becomes of finite size and convenient for coupling prime mover or the mechanical load. Naturally, rotational speed and torques will be more useful quantities compared to velocity and forces in linear machines.

36.3.1 Driving & Opposing torques

There are various kinds of rotating electrical machines such as D.C machines, Induction machines, Synchronous machines etc. and they can run either as motor or as a generator. When a generator or a motor runs at a constant speed, we can say with conviction (from Newton's laws of rotational motion) that the *driving* torque and the *opposing* torque must be numerically equal and acting in opposite directions.

36.3.2 Generator mode

In case of generator mode, the driving torque is obtained by *prime movers.* A diesel engine or water turbine or steam turbine could be selected as prime movers. In laboratory environment, motors are used as prime movers. The direction of rotation of the generator is same as the direction of the prime mover torque. A loaded electrical rotating machine always produces electromagnetic torque T_e, due to the interaction of stator field and armature current. T_e together

with small frictional torque is the opposing torque in generator mode. This opposing torque is called the *load* torque, T_L. If one wants to draw more electrical power out of the generator, T_e (hence T_L) increases due to more armature current. Therefore, prime mover torque must increase to balance T_L for steady speed operation with more fuel intake.

36.3.3 Motor mode

In case of motor mode, the driving torque is the electromagnetic torque, T_e and direction of rotation will be along the direction of T_e. Here the opposing torque will be due to mechanical load (such as pumps, lift, crane, blower etc.) put on the shaft and small frictional torque. In this case also the opposing torque is called the load torque T_L. For steady speed operation, $T_e = T_L$ numerically and acts in opposite direction. To summarize, remember:

- If it is acting as a motor, electromagnetic torque T_e acts along the direction of the rotor rotation and the load torque T_L acts in the opposite direction of rotation as shown in the figure 36.8 (a). If $T_e = T_L$ motor runs steadily at constant speed. During transient operation, if $T_e > T_L$, motor will accelerate and if $T_e < T_L$ motor will decelerate.

- On the other hand, if the machine is acting as a generator, the prime mover torque T_{pm} acts along the direction of rotation while the electromagnetic torque, T_e acts in the opposite direction of rotation as shown in figure 36.8 (b). Here also during transient operation if $T_{pm} > T_L$, the generator will accelerate and if $T_{pm} < T_L$, the generator will decelerate.

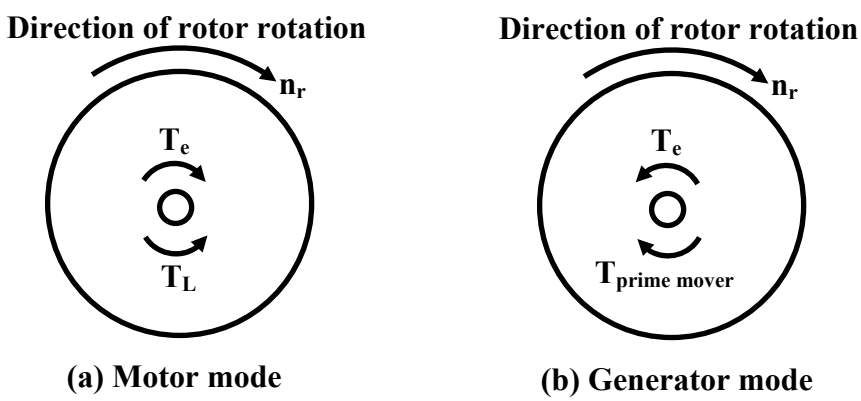

Figure 36.8: Direction of torques in rotating machines.

36.4 Condition for steady production of torque

The production of electromagnetic torque can be considered to be interaction between two sets of magnets, one produced due to current in the stator windings and the other produced due to rotor winding current. The rotor being free to rotate, it can only move along direction of the resultant torque. Let us first assume that windings are so wound that both stator and rotor produces same number of poles when they carry current. In figure 36.9(a) both stator and rotor produces 4 number of poles each. It can easily be seen that rotor pole N_{r1} is repelled by N_{s1} and attracted by S_{s2}. These two forces being additive produces torque in the clock wise direction. In the same way other rotor poles experience torque along the same clock wise direction confirming that a resultant torque is produced.

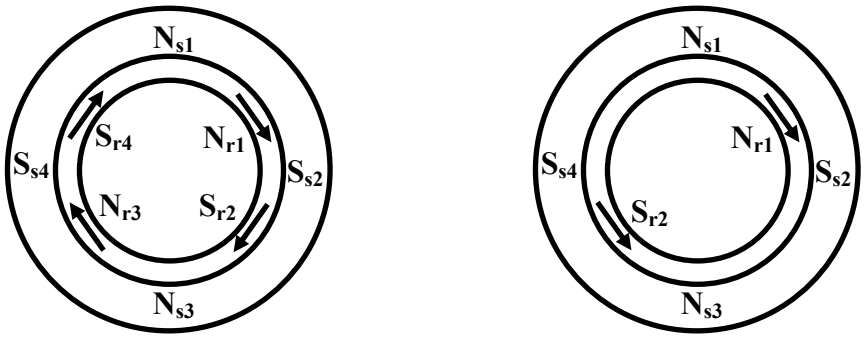

(a) Torques are additive when no. of Stator poles = Rotor poles

(b) Rotor experiences zero torque when no. of Stator poles ≠ Rotor poles

Figure 36.9: Direction of torques in rotating machines.

However, if stator winding produces 4 poles and rotor winding produces 2 poles, the resultant torque experienced by rotor will be zero as shown in figure 36.9(b). Here N_{r1} is repelled by N_{s1} and attracted by S_{s2} trying to produce torque in the clock wise direction: while S_{r2} is attracted by N_{s3} and repelled by S_{s4} trying to produce torque in the counter clock wise direction. So net torque is zero. So a rotating electrical machine can not work with different number of poles.

The condition that stator number of poles should be equal to the rotor number of poles is actually a necessary condition for production of steady electromagnetic torque. What is the sufficient condition then? Let us look once again at figure 36.9(a) where stator and rotor number of poles are same and equal to 4. Suppose the relative position of the poles shown, is at a particular instant of time say *t.* We can easily recognize the factors on which the magnitude of the torque produced will depend at this instant. Strength of stator & rotor poles is definitely one factor and the other factor is the relative position of stator and rotor poles (which essentially means the distance between the interacting poles). If the machine has to produce a definite amount of torque for all time to come for sustained operation, the relative position of the stator and rotor field patterns must remain same and should not alter with time. Alternative way of expressing this is to say : *the relative speed between the stator and rotor fields should be zero with respect to a stationary observer.*

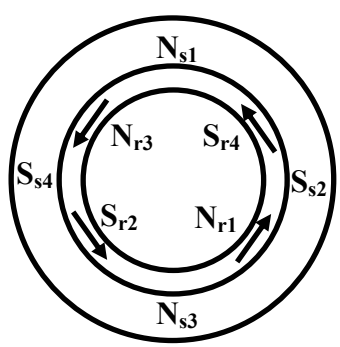

Figure 36.10: Direction of torques in rotating machines.

Now let us see what happens if there exists a relative speed between the stator and the rotor fields. Suppose initial positions of the two fields are as shown in figure 36.9(a), when the direction of the torque is clock wise. Due to the relative speed, let after some time the position of

the field patterns becomes as shown in figure 36.10. At this instant, we see that direction of torque reverses and becomes counter clock wise. In other words rotor will go on experiencing alternating torque, sometimes in the clock wise and sometimes in counter clock wise direction. Hence net average torque (over time), will be zero. Summarizing the above we can conclude that a rotating electrical machine can produce steady electromagnetic torque only when the following two conditions are satisfied.

- Stator and rotor number of poles must be same.
- There should not be a relative speed existing between the two fields with respect to a stationary observer.

36.5 D.C generator: Basic principle of operation

A D.C generator is shown in figure 36.11. Let the armature be driven by a prime mover in the clock wise direction and the stator field is excited so as to produce the stator poles as shown. There will be induced voltage in each armature conductor. The direction of the induced voltage can be ascertained by applying *Fleming's right hand rule.* All the conductors under the influence of south pole will have ⊗ directed induced voltage, while the conductors under the influence of North pole will have ⊙ induced voltage in them. For a loaded generator the direction of the armature current will be same as that of the induced voltages. Thus ⊗ and ⊙ also represent the direction of the currents in the conductors. We know, a current carrying conductor placed in a magnetic field experiences force, the direction of which can be obtained by applying *Fleming's left hand rule.* Applying this rule to the armature conductors in figure 36.11, we note that rotor experiences a torque (T_e) in the counter clockwise direction (i.e., opposite to the direction of rotation). As discussed earlier, for steady speed operation $T_{pm} = T_e$.

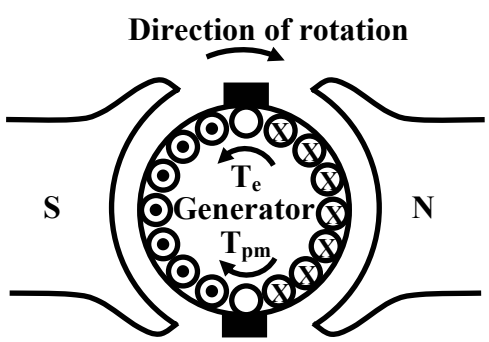

Figure 36.11: D.C Generator: principle of operation.

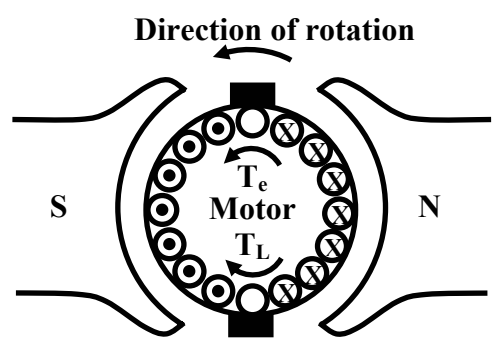

Figure 36.12: D.C motor: principle of operation.

36.6 D.C motor: Basic principle of operation

Now let us look at a D.C motor shown in figure 36.12. Excited stator coils are assumed to produce south and north poles as depicted. Now if the armature is connected to a D.C source, current will be flowing through the armature conductors. Let the conductors under the influence of the south pole carries ⊗ currents and the conductors under the influence of north pole carries ⊙ currents. Applying *Fleming's left hand rule,* we note torque T_e will be produced in the counter clockwise direction causing the rotor to move in the same direction. For steady speed

operation, T_e will be balanced by the mechanical load torque T_L imposed on the shaft. Load torque T_L will be in the opposite direction of rotation. It should be noted that when the armature conductors move in presence of a field, voltage is bound to be induced in the conductor (as explained in the previous section). The direction of this generated emf, ascertained by *Fleming's right hand rule* is found to be in the opposite direction of the current flow. In other words, the generated voltage in the armature acts in opposition to the source voltage. The generated voltage in a D.C motor is usually called the *back emf,* E_b. The expression for armature current is $I_a = \frac{(V_s - E_b)}{r_a}$, where V_s is the supply voltage and r_a is the armature circuit resistance.

36.7 Answer the following

1. Show the directions of prime mover torque, electromagnetic torque and direction of rotation for an electrical generator.
2. Show the directions of electromagnetic torque, load torque and direction of rotation of an electrical motor.
3. Write down the conditions for production of steady electromagnetic torque for a rotating electrical motor.
4. The operation of electrical rotating machines can be thought to be the interaction of two sets of magnet, one produced by stator coils and the other produced by rotor coils. If stator produces 6 poles, explain how many poles rotor must produces for successful steady operation.
5. A single conductor motor as shown in figure 36.4 is found to draw a steady 0.5 A current from d,c supply of E = 50 V. If l = 2 m and B = 1.2 T, Calculate (i) the back emf E_b, (ii) the velocity of the conductor, (iii) the driving force and (iv) the opposing force. Also check the for the power balance in the system i.e., power supplied by the battery must be equal to the power loss in the resistance + mechanical power to overcome friction.

Module 9

DC Machines

Lesson 37

EMF & Torque Equation

Contents

37 EMF & Torque Equations **4**

37.1 Goals of the lesson ……. 4

37.2 Introduction …… 4

37.3 EMF & Torque Equations …….. 4

37.3.1 EMF Equation …… 5

37.3.2 Torque Equation …….. 6

37.4 GNP and MNP ……... 6

37.5 Armature reaction …….. 7

37.5.1 No Load operation …….. 8

37.5.2 Loaded operation ……. 8

37.6 Cross magnetizing & Demagnetizing AT ……. 9

37.6.1 Commutation & Armature reaction …… 11

37.7 Tick the correct answer …….. 13

37.8 Answer the following ……. 14

37.1 Goals of the lesson

After going through the lesson, the student will be able to understand:

1. the factors on which induced voltage in the armature depend.
2. the factors on which the electromagnetic torque developed depend.
3. the derivation of the emf and torque equations.
4. that emf and torque equations are applicable to both generator and motor operations.
5. why the generated emf in motor called the back emf.
6. armature reaction, its ill effects and remedial measures.
7. the purpose of compensating winding – its location and connection.
8. the purpose of interpole – its location and connection.
9. the difference between the GNP (geometric neutral plane) and MNP (magnetic neutral plane).

37.2 Introduction

Be it motor or generator operations, the analysis of D.C machine performance center around two fundamental equations namely the emf equation and the torque equations. In fact both motoring and generating actions go together in d.c machines. For example in a d.c motor there will be induced voltage across the brushes in the same way as in a generator. The induced voltage in d.c motor is however called by a different name *back emf*. Thus the factors on which induced emf in generator depend will be no different from motor action. In fact the same emf equation can be employed to calculate induced emf for both generator and motor operation. In the same way same *torque equation* can be used to calculate electromagnetic torque developed in both motoring and generating actions.

In this lesson these two fundamental equations have been derived.

Field patterns along the air gap of the machine for both motor and generator modes are explained. The ill effects of armature mmf (for a loaded machine) is discussed and possible remedial measures are presented. Calculation of cross magnetizing and demagnetizing AT (ampere turns) of d.c machines with shifted brush are presented. Depending on your course requirement the derivation for these ATs with sifted brush may be avoided. Finally, the phenomenon of *armature reaction* and a brief account of commutation are presented.

37.3 EMF & Torque Equations

In this section we shall derive two most fundamental and important formulas (namely emf and torque equations) for d.c machine in general. These will be extensively used to analyse the performance and to solve problems on d.c machines.

37.3.1 EMF Equation

Consider a D.C generator whose field coil is excited to produce a flux density distribution along the air gap and the armature is driven by a prime mover at constant speed as shown in figure 37.1.

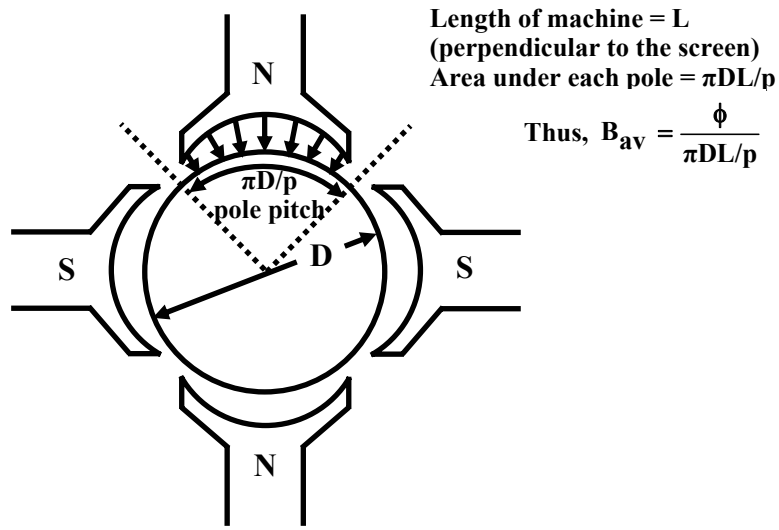

Figure 37.1: Pole pitch & area on armature surface per pole.

Let us assume a p polar d.c generator is driven (by a prime mover) at n rps. The excitation of the stator field is such that it produces a ϕ Wb flux per pole. Also let z be the total number of armature conductors and a be the number of parallel paths in the armature circuit. In general, as discussed in the earlier section the magnitude of the voltage from one conductor to another is likely to very since flux density distribution is *trapezoidal* in nature. Therefore, total average voltage across the brushes is calculated on the basis of average flux density B_{av}. If D and L are the rotor diameter and the length of the machine in meters then area under each pole is $\left(\frac{\pi D}{p}\right)L$. Hence average flux density in the gap is given by

$$\text{Average flux density } B_{av} = \frac{\phi}{\left(\frac{\pi D}{p}\right)L}$$

$$= \frac{\phi\, p}{\pi\, DL}$$

$$\text{Induced voltage in a single conductor} = B_{av}Lv$$

$$\text{Number of conductors present in each parallel path} = \frac{z}{a}$$

$$\text{If } v \text{ is the tangential velocity then, } v = \pi Dn$$

$$\text{Therefore, total voltage appearing across the brushes} = \frac{z}{a}B_{av}Lv$$

$$= \frac{z}{a}\frac{\phi p}{\pi\, DL}L\pi\, Dn$$

$$\text{Thus voltage induced across the armature, } E_A = \frac{pz}{a}\phi\, n \qquad (37.1)$$

We thus see that across the armature a voltage will be generated so long there exists some flux per pole and the machine runs with some speed. Therefore irrespective of the fact that the machine is operating as generator or as motor, armature has an induced voltage in it governed essentially by the above derived equation. This emf is called *back emf* for motor operation.

37.3.2 Torque equation

Whenever armature carries current in presence of flux, conductor experiences force which gives rise to the electromagnetic torque. In this section we shall derive an expression for the electromagnetic torque T_e developed in a d.c machine. Obviously T_e will be developed both in motor and generator mode of operation. It may be noted that the direction of conductor currents reverses as we move from one pole to the other. This ensures unidirectional torque to be produced. The derivation of the torque expression is shown below.

$$\text{Let, } I_a = \text{Armature current}$$

$$\text{Average flux density } B_{av} = \frac{\phi p}{\pi DL}$$

$$\text{Then, } \frac{I_a}{a} = \text{Current flowing through each conductor.}$$

$$\text{Force on a single conductor} = B_{av}\frac{I_a}{a}L$$

$$\text{Torque on a single conductor} = B_{av}\frac{I_a}{a}L\frac{D}{2}$$

$$\text{Total electromagnetic torque developed, } T_e = zB_{av}\frac{I_a}{a}L\frac{D}{2}$$

$$\text{Putting the value of } B_{av}\text{, we get } T_e = \frac{pz}{2\pi a}\phi I_a \qquad (37.2)$$

Thus we see that the above equation is once again applicable both for motor and generator mode of operation. The direction of the electromagnetic torque, T_e will be along the direction of rotation in case of motor operation and opposite to the direction of rotation in case of generator operation. When the machine runs steadily at a constant rpm then $T_e = T_{load}$ and $T_e = T_{pm}$, respectively for motor and generator mode.

The emf and torque equations are extremely useful and should be remembered by heart.

37.4GNP and MNP

In a unloaded d.c machine field is produced only by the field coil as armature does not carry any current. For a unloaded generator, net field is equal to $\vec{M}_f$ produced by field coil alone and as shown in figure 37.2 (a). Then for a plane which is at right angles to $\vec{M}_f$, no field can exist along the plane, since $M_f \cos 90^0 = 0$. The plane along which there will be no field is called *Magnetic Neutral Plane* or MNP in short. The *Geometrical Neutral Plane* (GNP) is defined as a plane which is perpendicular to stator field axis. Thus for an unloaded generator GNP and MNP coincide. In a loaded generator, apart from $\vec{M}_f$, there will exist field produced by armature $\vec{M}_a$ as well making the resultant field $\vec{M}_r$ shifted as shown in figure 37.2 (b). Thus MNP in this case will be perpendicular to $\vec{M}_r$. Therefore it may be concluded that MNP for generator mode gets shifted along the direction of rotation of the armature.

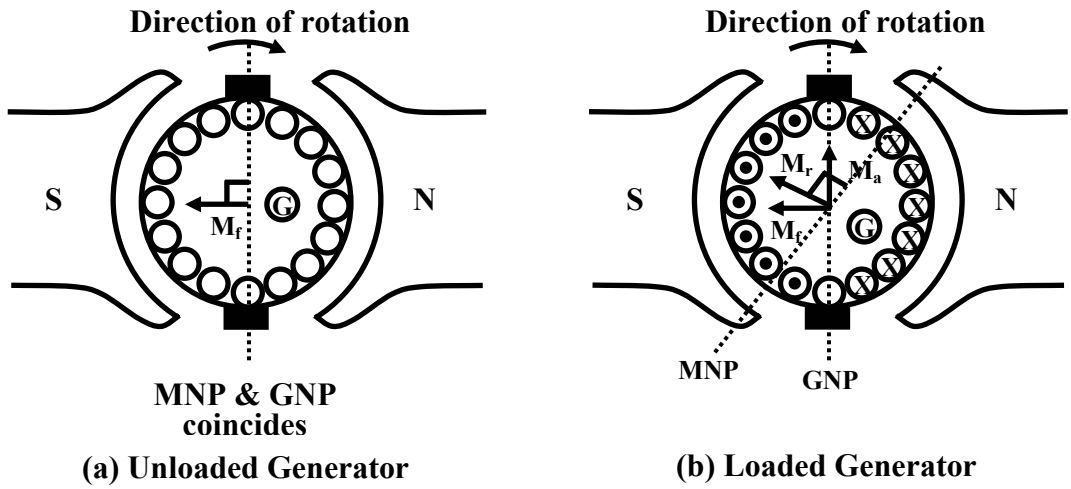

Figure 37.2: MNP & GNP : Generator mode.

The shift of MNP for a loaded motor will be in a direction opposite to the rotation as depicted in figure 37.3 (b). The explanation of this is left to the reader as an exercise.

37.5 Armature reaction

In a unloaded d.c machine armature current is vanishingly small and the flux per pole is decided by the field current alone. The uniform distribution of the lines of force get upset when armature too carries current due to loading. In one half of the pole, flux lines are concentrated and in the other half they are rarefied. Qualitatively one can argue that during loading condition flux per pole will remain same as in no load operation because the increase of flux in one half will be balanced by the decrease in the flux in the other half. Since it is the flux per pole which decides the emf generated and the torque produced by the machine, seemingly there will be no effect felt so far as the performance of the machine is concerned due to armature reaction. This in fact is almost true when the machine is lightly or moderately loaded.

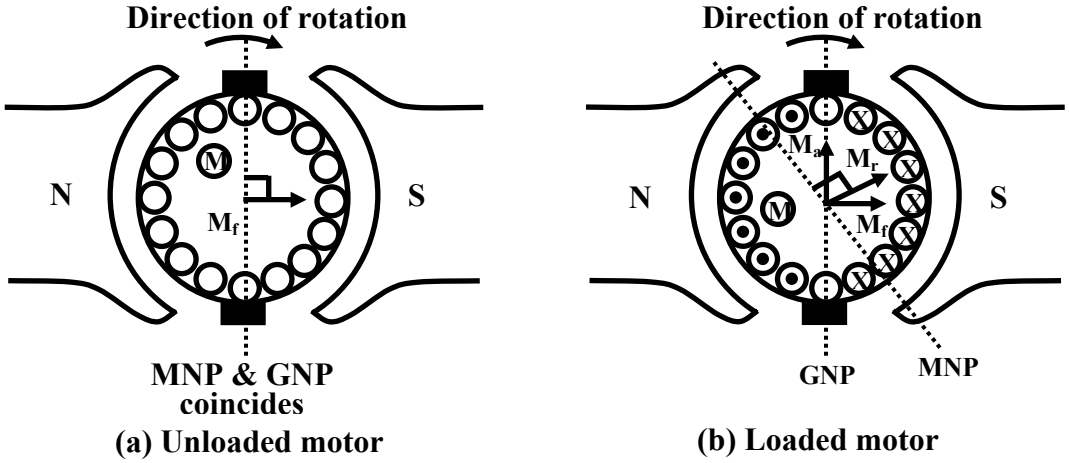

Figure 37.3: MNP & GNP : Motor mode.

However at rated armature current the increase of flux in one half of the pole is rather less than the decrease in the other half due to presence of *saturation*. In other words there will be a net decrease in flux per pole during sufficient loading of the machine. This will have a direct bearing on the emf as well as torque developed affecting the performance of the machine.

Apart from this, due to distortion in the flux distribution, there will be some amount of flux present along the q-axis (brush axis) of the machine. This causes *commutation* difficult. In the following sections we try to explain armature reaction in somewhat detail considering motor and generator mode separately.

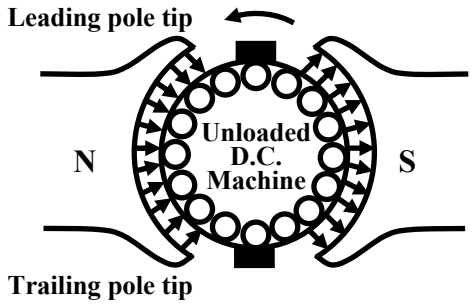

Figure 37.4: Flux lines during no load condition.

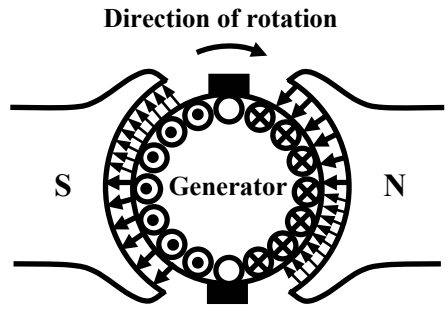

Figure 37.5: Flux lines for a loaded generator.

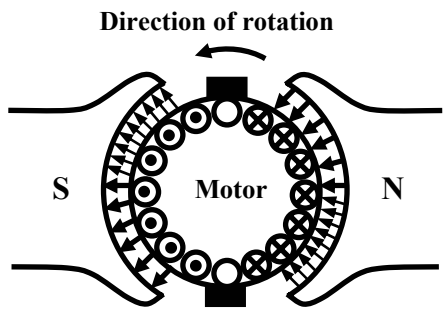

Figure 37.6: Flux lines for a loaded motor.

37.5.1 No Load operation

When a d.c machine operates absolutely under no load condition, armature current is zero. Under such a condition T_e developed is zero and runs at constant no load speed. In absence of any I_a, the flux per pole ϕ, inside the machine is solely decided by the field current and lines of force are uniformly distributed under a pole as shown in figure 37.4.

37.5.2 Loaded operation

A generator gets loaded when a resistance across the armature is connected and power is delivered to the resistance. The direction of the current in the conductor (either cross or dot) is decided by the fact that direction of T_e will be opposite to the direction of rotation. It is therefore obvious to see that flux per pole ϕ, developed in the generator should be decided not only by the mmf of the field winding alone but the armature mmf as well as the armature is carrying current now. By superposing the no load field lines and the armature field lines one can get the resultant

field lines pattern as shown in Figures 37.5 and 37.7. The tip of the pole which is seen by a moving conductor first during the course of rotation is called the *leading pole tip* and the tip of the pole which is seen later is called the *trailing pole tip*. In case of generator mode we see that the lines of forces are concentrated near the trailing edge thereby producing torque in the opposite direction of rotation. How the trapezoidal no load field gets distorted along the air gap of the generator is shown in the Figure 37.7.

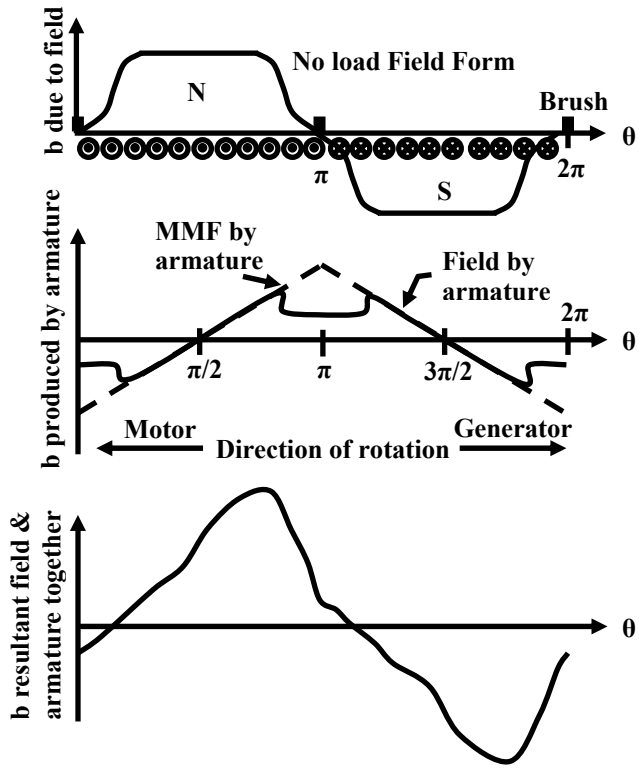

Figure 37.7: Effect of Armature Reaction

In this figure note that the armature mmf distribution is triangular in nature and the flux density distribution due to armature current is obtained by dividing armature mmf with the reluctance of the air gap. The reluctance is constant and small at any point under the pole. This means that the armature flux density will simply follow the armature mmf pattern. However, the reluctance in the q-axis region is quite large giving rise to small resultant flux of polarity same as the main pole behind in the q-axis.

In the same way one can explain the effect of loading a d.c motor by referring to Figures 37.6 and 37.7. Point to be noted here is that the lines of forces gets concentrated near the *leading* pole tip and rarefied near the *trailing* pole thereby producing torque along the direction of rotation. Also note the presence of some flux in the q-axis with a polarity same as main pole ahead.

37.6 Cross magnetising & Demagnetising AT

Usually the brushes in a d.c machine are along the GNP. The armature mmf $\vec{M}_a$ which acts always along the direction of the brush axis also acts along GNP. It may also be noted that $\vec{M}_a$ is at right angles to the field mmf $\vec{M}_f$ when brushes are not shifted. Thus $\vec{M}_a$ has cross magnetising effect on $\vec{M}_f$. Apparently $\vec{M}_a$ does not have any component opposing $\vec{M}_f$ directly.

The presence of cross magnetising armature mmf $\vec{M}_a$ distorts the no load field pattern caused by $\vec{M}_f$.

The cross magnetising armature AT can be calculated as shown below.

$$\begin{aligned}
\text{Let, } P &= \text{Number of poles} \\
z &= \text{Total number of armature conductors} \\
a &= \text{Number of parallel paths} \\
\text{Armature current} &= I_a \\
\text{Current through armature conductor} &= I_a / a \\
\text{Total Ampere conductors} &= \frac{I_a}{a} z \\
\text{Total AT} &= \frac{I_a}{a}\frac{z}{2} \\
\therefore \text{Armature AT/pole} &= \frac{I_a z}{2aP}
\end{aligned}$$

Demagnetising by armature mmf can occur when a *deliberate* brush shift is introduced. Small brush shift is sometimes given to improve commutation. For generator brush shift is given in the forward direction (in the direction of rotation) while for motor mode the brush shift is given in the backward direction (opposite to the direction of rotation) as shown in figures 37.8 and 37.9.

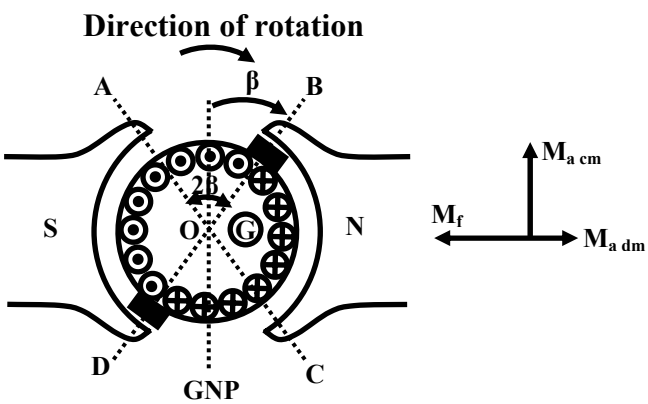

Brush shift in forward direction for Generator

Figure 37.8:

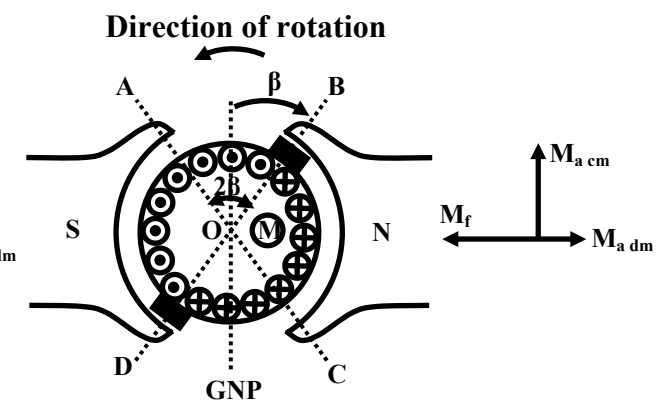

Brush shift in backward direction for Motor

Figure 37.9:

Let the brush shift be $\beta°$ (mechanical) for all the brushes. Then as depicted in the figure 37.8 the conductors present within the angle 2 $\beta°$ (i.e., ∠AOB and ∠COD) will be responsible for demagnetization and conductors present within the angle (180° - 2 $\beta°$) (i.e., ∠AOD and ∠BOC) will be responsible for crossmagnetisation for a 2 polar machine.

Ampere turns for demagnetization can be calculated as follows:

$$\text{Number of conductors spread over } 360° = z$$

$$\text{Number of conductors spread over } 2\beta° = \frac{z}{360°} 2\beta°$$

$$\text{Demagnetizing Ampere conductors contributed by } 2\beta^\circ = \frac{I_a}{a}\frac{z}{360^\circ}2\beta^\circ$$

Since brushes are placed in the inter polar regions and there are P number of brush positions,

$$\therefore \text{Total number of conductors responsible for demagnetization} = \frac{z}{360^\circ}(P2\beta^\circ)$$

$$\text{Total Demagnetising Ampere conductors} = P\frac{I_a}{a}\frac{z}{360^\circ}2\beta^\circ$$

$$\text{Total Demagnetising Ampere turns} = \frac{PI_a}{2a}\frac{z}{360^\circ}2\beta^\circ$$

$$\text{Total Demagnetising Ampere turns per pole} = \frac{I_a z}{2a}\frac{2\beta^\circ}{360^\circ}$$

To find expression for the cross magnetising, replace 2 $\beta°$ by (180° - 2 $\beta°$) in the above expression to get:

$$\text{Number of conductors responsible for cross magnetization} = \frac{z(360^\circ - P2\beta^\circ)}{360^\circ}$$

$$\text{Total cross Ampere turns} = \frac{I_a}{2a}\frac{z(360^\circ - P2\beta^\circ)}{360^\circ}$$

$$\text{Total cross Ampere turns per pole} = \frac{I_a}{2aP}\frac{z(360^\circ - P2\beta^\circ)}{360^\circ}$$

It may easily be verified that the sum of demagnetizing AT/pole and cross magnetising AT/pole is equal to total AT/pole as shown below:

$$\frac{I_a z}{2a}\frac{2\beta^\circ}{360^\circ} + \frac{I_a}{2aP}\frac{z(360^\circ - P2\beta^\circ)}{360^\circ} = \frac{I_a z}{2aP}$$

37.6.1 Commutation & Armature reaction

If we concentrate our attention to a single conductor, we immediately recognize that the direction of current reverses as it moves from the influence of one pole to the influence of the next opposite pole. This reversal of current in the conductor is called *commutation*. During no load operation when the conductor reaches the *magnetic neutral axis* or the q-axis, the induced voltage in it is zero as there is no flux is present in the q-axis. Also any coil present in this position and under going commutation, will get short circuited by the commutator segments and brushes. In other words we see that every coil will be short circuited whenever it undergoes commutation and fortunately at that time induced emf in the coil being zero, no circulating current will be present at least during no load condition. But as discussed earlier, flux in the quadrature axis will never be zero when the machine is loaded. Hence coil undergoing commutation will have circulating current causing problem so far as smooth commutation is concerned.

For small machines (up to few kilo watts) no special care is taken to avoid the armature reaction effects. However for large machines, to get rid of the ill effects of armature reaction one can use *compensating winding, inter poles* or both.

The basic idea of nullifying armature mmf is based on a very simple fact. We know that a magnetic field is produced in the vicinity when a conductor carries current. Naturally another conductor carrying same current but in the opposite direction if placed in close proximity of the first conductor, the resultant field in the vicinity will be close to zero. Additional winding called *compensating winding* is placed on the *pole faces* of the machine and connected in series with the armature circuit in such a way that the direction of current in compensating winding is opposite to that in the armature conductor as shown in Figure 37.10. It may be noted that compensating winding can not nullify the quadrature axis armature flux completely. Additional small poles called *inter poles* are provided in between the main poles in large machines to get rid of the commutation problem arising out of armature reaction.

Sectional view of a machine provided with both compensating and inter poles is shown in Figure 37.11 and the schematic representation of such a machine is shown in Figure 37.12.

Careful inspection of the figures mentioned reveal that the polarity of the inter pole should be same as that of the main pole ahead in case of generator and should be same as that of main pole behind in case of motor.

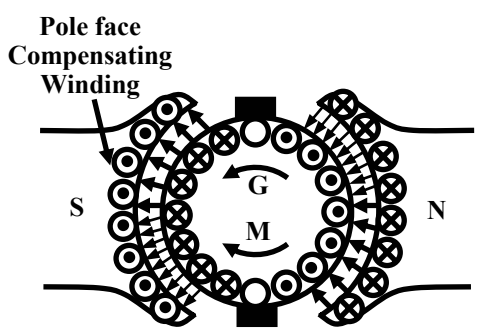

Figure 37.10: Position of compensating winding.

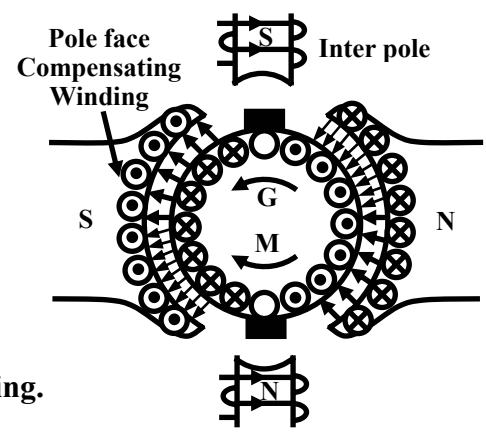

Figure 37.11: Inter pole coil.

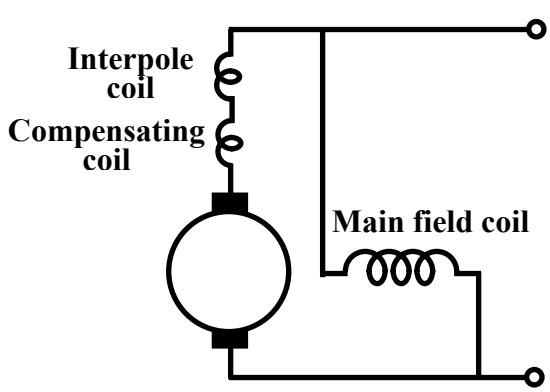

Figure 37.12: Interpole & compensating coil connection.

37.7 Tick the correct answer

1. A d.c generator is found to develop an armature voltage of 200 V. If the flux is reduced by 25% and speed is increased by 40%, the armature generated voltage will become:

   (A) 20 V (B) 107 V (C) 210 V (D) 373 V

2. A d.c motor runs steadily drawing an armature current of 15 A. To develop the same amount of torque at 20 A armature current, flux should be:

   (A) reduced by 25% (B) increased by 25%
   (C) reduced by 33% (D) increased by 33%

3. A d.c generator develops 200 V across its armature terminals with a certain polarity. To reverse the polarity of the armature voltage:

   (A) direction of field current should be reversed
   (B) direction of rotation should be reversed.
   (C) either of (A) and (B)
   (D) direction of both field current and speed should be reversed.

4. In a d.c shunt machine, the inter pole winding should be connected in

   (A) series with the armature.
   (B) series with the field winding.
   (C) parallel with the armature.
   (D) parallel with the field winding.

5. In a d.c shunt machine, compensating winding should be connected in

   (A) series with the armature.
   (B) series with the field winding.
   (C) parallel with the armature.
   (D) parallel with the field winding.

6. In a d.c generator, interpole coil should be connected in such a fashion that the polarity of the interpole is

   (A) same as that of main pole ahead.
   (B) same as that main pole behind.
   (C) either of (A) and (B).
   (D) dependent on armature current.

7. In a d.c motor, interpole coil should be connected in such a fashion that the polarity of the interpole is

(A) same as that of main pole ahead.
(B) same as that of main pole behind.
(C) either of (A) and (B).
(D) dependent on feild current.

37.8 Answer the following

1. Write down the expression for electromagnetic torque in a d.c motor. Now comment how the direction of rotation can be reversed.

2. Write down the expression for the generated voltage in a d.c generator. Now comment how can you reverse the polarity of the generated voltage.

3. Comment on the direction of electromagnetic torque in a d.c motor if both armature current and field current are reversed.

4. A 4-pole, lap wound, d.c machine has total number of 800 armature conductors and produces 0.03 Wb flux per pole when field is excited. If the machine is driven by a prime mover at 1000 rpm, calculate the generated emf across the armature. If the generator is loaded to deliver an armature current of 50 A, Calculate the prime mover and electromagnetic torques developed at this load current. Neglect frictional torque.

5. A 4-pole, lap wound, d.c machine has a total number of 800 armature conductors and an armature resistance of 0.4 Ω. If the machine is found to run steadily as motor at 1000 rpm and drawing an armature current of 10 A from a 220 V D.C supply, calculate the back emf, electromagnetic torque and the load torque.

6. Clearly mention the purpose of providing interpoles in large d.c machines.

7. Comment on the polarity of the interpole for motor and generator modes.

8. Why and what for, is the compensating winding provided in large d.c machines?

9. How are interpole coil and compensating windings connected in d.c machine?

Module 9

DC Machines

Lesson 38

D.C Generators

Contents

38 D.C Generators (Lesson-38) 4

38.1 Goals of the lesson …….. 4

38.2 Generator types & characteristics. ……... 4

38.2.1 Characteristics of a separately excited generator. …… 5

38.2.2 Characteristics of a shunt generator. …… 7

38.2.3 Load characteristic of shunt generator. …… 10

38.2.4 Prediction of approximate load characteristic from OCC & R_f line. …… 10

38.3 Compound generator ……... 12

38.4 Tick the correct answer …… 14

38.5 Solve the following …… 15

38.1 Goals of the lesson

Students are expected to learn about the classification of d.c generators and their characteristics in this lesson. After going through this lesson they will be able to:

1. differentiate different types of d.c generators along with their schematic representations.
2. identify, looking at the circuit diagram of a given generator, the types of the generator i.e., whether the generator is shunt, separately excited or compound generator.
3. sketch the important characteristics (no load and load characteristics) of different types of generators.
4. identify various factors responsible for internal voltage drop.
5. understand the conditions to be fulfilled so as to build up voltage in a shunt generator.
6. predict the load characteristic of a shunt generator from its open circuit characteristic.
7. locate the shunt and series field coils in the machine and comment on their relative number of turns and cross sectional areas.

38.2 Generator types & Characteristics

D.C generators may be classified as (i) separately excited generator, (ii) shunt generator, and (iii) series generator and (iv) compound generator.

In a separately excited generator field winding is energised from a separate voltage source in order to produce flux in the machine. So long the machine operates in unsaturated condition the flux produced will be proportional to the field current. In order to implement shunt connection, the field winding is connected in parallel with the armature. It will be shown that subject to fulfillment of certain conditions, the machine may have sufficient field current developed on its own by virtue of its shunt connection.

In series d.c machine, there is one field winding wound over the main poles with fewer turns and large cross sectional area. Series winding is meant to be connected in series with the armature and naturally to be designed for rated armature current. Obviously there will be practically no voltage or very small voltage due to residual field under no load condition ($I_a = 0$). However, field gets strengthened as load will develop rated voltage across the armature with reverse polarity, is connected and terminal voltage increases. Variation in load resistance causes the terminal voltage to vary. Terminal voltage will start falling, when saturation sets in and armature reaction effect becomes pronounced at large load current. Hence, series generators are not used for delivering power at constant voltage. Series generator found application in boosting up voltage in d.c transmission system.

A compound generator has two separate field coils wound over the field poles. The coil having large number of turns and thinner cross sectional area is called the *shunt field coil* and the other coil having few number of turns and large cross sectional area is called the *series field coil*. Series coil is generally connected in series with the armature while the shunt field coil is connected in parallel with the armature. If series coil is left alone without any connection, then it becomes a shunt machine with the other coil connected in parallel. Placement of field coils for shunt, series and compound generators are shown in figure 38.1. Will develop rated voltage across the armature with reverse polarity.

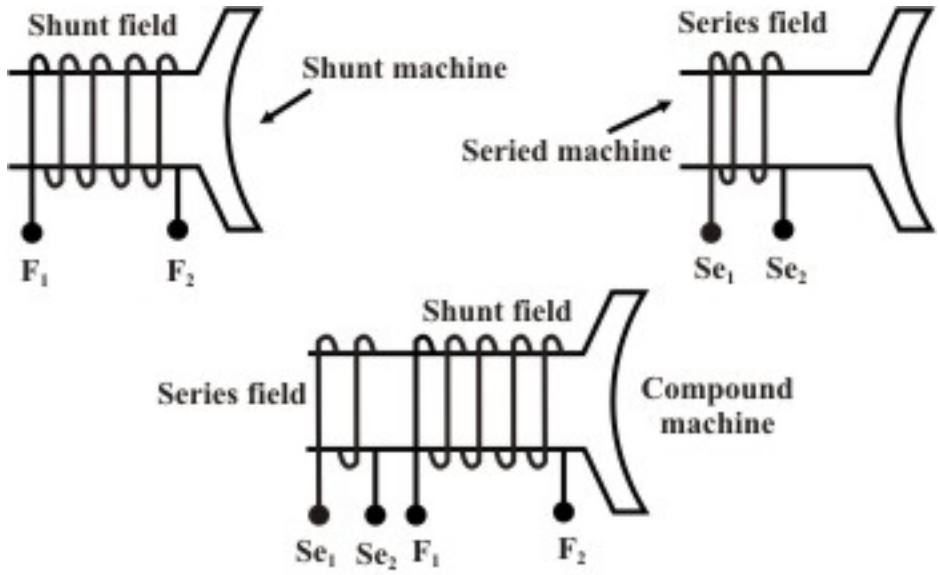

Figure 38.1: Field coils for different d.c machines.

38.2.1 Characteristics of a separately excited generator

No load or Open circuit characteristic

In this type of generator field winding is excited from a separate source, hence field current is independent of armature terminal voltage as shown on figure (38.2). The generator is driven by a prime mover at rated speed, say n rps. With switch S in opened condition, field is excited via a *potential divider* connection from a separate d.c source and field current is gradually increased. The field current will establish the flux per pole ϕ. The voltmeter V connected across the armature terminals of the machine will record the generated emf ($E_G = \frac{pz}{a}\phi n = k\phi n$). Remember $\frac{pz}{a}$ is a constant (k) of the machine. As field current is increased, E_G will increase. E_G versus I_f plot at constant speed n is shown in figure (38.3a).

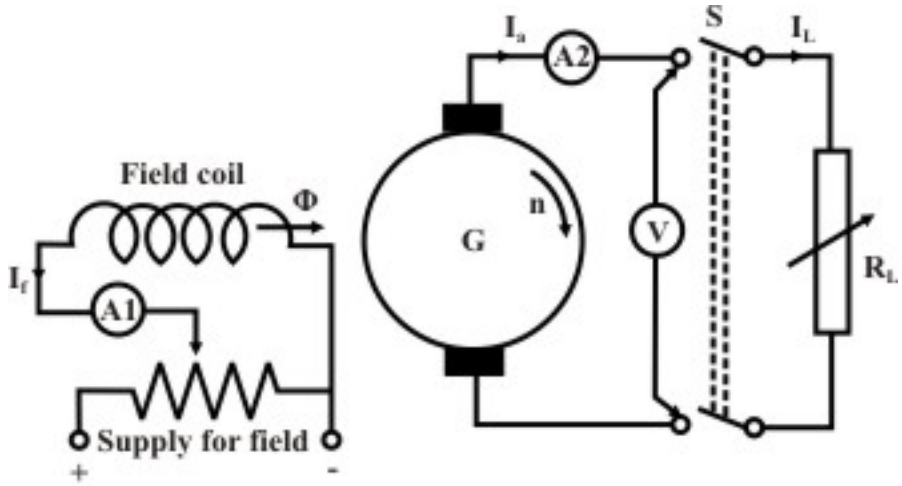

Figure 38.2: Connection of separately excited generator.

It may be noted that even when there is no field current, a small voltage (OD) is generated due to residual flux. If field current is increased, ϕ increases linearly initially and O.C.C follows a straight line. However, when *saturation* sets in, ϕ practically becomes constant and hence E_g too becomes constant. In other words, O.C.C follows the *B-H* characteristic, hence this characteristic is sometimes also called the *magnetisation* characteristic of the machine.

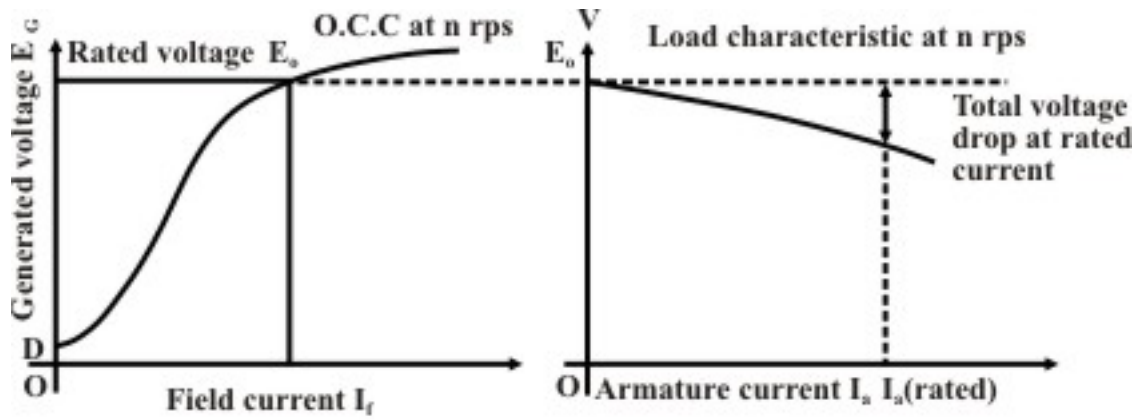

Figure 38.3: No load & Load characteristics of a separately excited generator.

It is important to note that if O.C.C is known at a certain speed n_1, O.C.C at another speed n_2 can easily be predicted. It is because for a constant field current, ratio of the generated voltages becomes the ratio of the speeds as shown below.

$$\frac{E_{G2}}{E_{G1}} = \frac{\text{Gen. voltage at } n_2}{\text{Gen. voltage at } n_1}$$

$$= \frac{k\phi n_2}{k\phi n_1} \quad \because \text{ voltage is calculated at same field current}$$

$$\therefore \frac{E_{G2}}{E_{G1}} = \frac{n_2}{n_1}\Big|\, i_f = \text{constant}$$

$$\text{or, } E_{G2} = \frac{n_2}{n_1} E_{G1}$$

Therefore points on O.C.C at n_2 can be obtained by multiplying ordinates of O.C.C at n_1 with the ratio $\frac{n_2}{n_1}$. O.C.C at two different speeds are shown in the following figure (38.4).

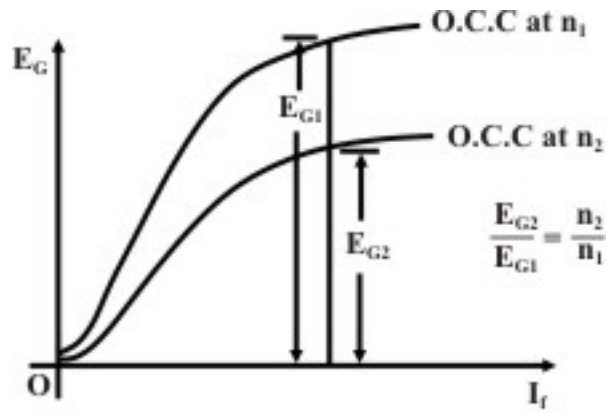

Figure 38.4: O.C.C at different speeds.

Load characteristic of separately excited generator

Load characteristic essentially describes how the terminal voltage of the armature of a generator changes for varying armature current I_a. First at rated speed, rated voltage is generated across the armature terminals with no load resistance connected across it (i.e., with S opened) by adjusting the field current. So for $I_a = 0$, $V = E_o$ should be the first point on the load characteristic. Now with S is closed and by decreasing R_L from infinitely large value, we can increase I_a gradually and note the voltmeter reading. Voltmeter reads the terminal voltage and is expected to decrease due to various drops such as armature resistance drop and brush voltage drop. In an uncompensated generator, armature reaction effect causes additional voltage drop. While noting down the readings of the ammeter A2 and the voltmeter V, one must see that the speed remains constant at rated value. Hence the load characteristic will be *drooping* in nature as shown in figure (38.3b).

38.2.2 Characteristics of a shunt generator

We have seen in the previous section that one needs a separate d.c supply to generate d.c voltage. Is it possible to generate d.c voltage without using another d.c source? The answer is yes and for obvious reason such a generator is called *self excited* generator.

Field coil (F1, F2) along with a series external resistance is connected in parallel with the armature terminals (A1, A2) of the machine as shown in figure (38.5). Let us first qualitatively explain how such connection can produce sufficient voltage. Suppose there exists some residual field. Therefore, if the generator is driven at rated speed, we should expect a small voltage $\left(k\phi_{res}n\right)$ to be induced across the armature. But this small voltage will be directly applied across the field circuit since it is connected in parallel with the armature. Hence a small field current flows producing additional flux. If it so happens that this additional flux aids the already existing residual flux, total flux now becomes more generating more voltage. This more voltage will drive more field current generating more voltage. Both field current and armature generated voltage grow *cumulatively*.

This growth of voltage and the final value to which it will settle down can be understood by referring to (38.6) where two plots have been shown. One corresponds to the O.C.C at rated speed and obtained by connecting the generator in separately excited fashion as detailed in the preceding section. The other one is the V-I characteristic of the field circuit which is a straight line passing through origin and its slope represents the total field circuit resistance.

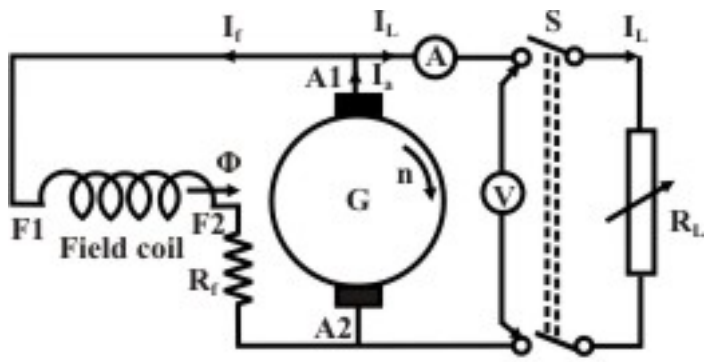

Figure 38.5: Shunt generator.

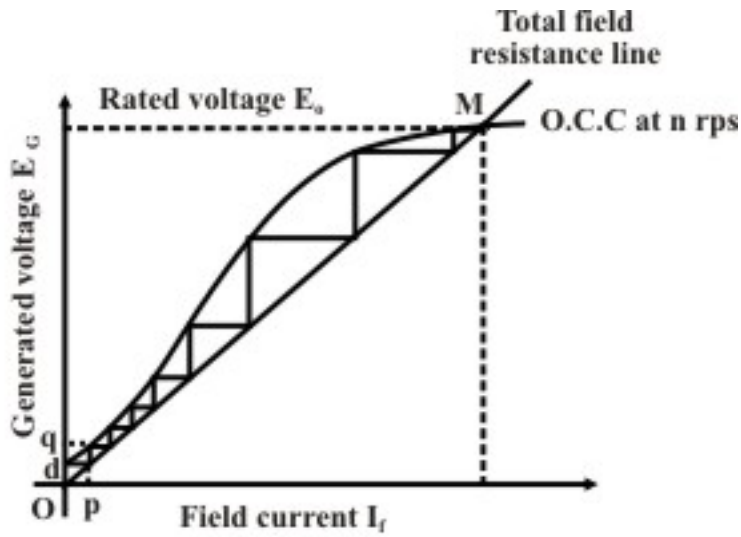

Figure 38.6: Voltage build up in shunt generator.

Initially voltage induced due to residual flux is obtained from O.C.C and given by Od. The field current thus produced can be obtained from field circuit resistance line and given by Op. In this way voltage build up process continues along the stair case. The final stable operating point (M) will be the point of intersection between the O.C.C and the field resistance line. If field circuit resistance is increased, final voltage decreases as point of intersection shifts toward left. The field circuit resistance line which is tangential to the O.C.C is called the *critical* field resistance. If the field circuit resistance is more than the critical value, the machine will fail to excite and no voltage will be induced - refer to figure 38.7. The reason being no point of intersection is possible in this case.

Suppose a shunt generator has built up voltage at a certain speed. Now if the speed of the prime mover is reduced without changing R_f, the developed voltage will be less as because the O.C.C at lower speed will come down (refer to figure 38.8). If speed is further reduced to a certain critical speed (n_{cr}), the present field resistance line will become tangential to the O.C.C at n_{cr}. For any speed below n_{cr}, no voltage built up is possible in a shunt generator.

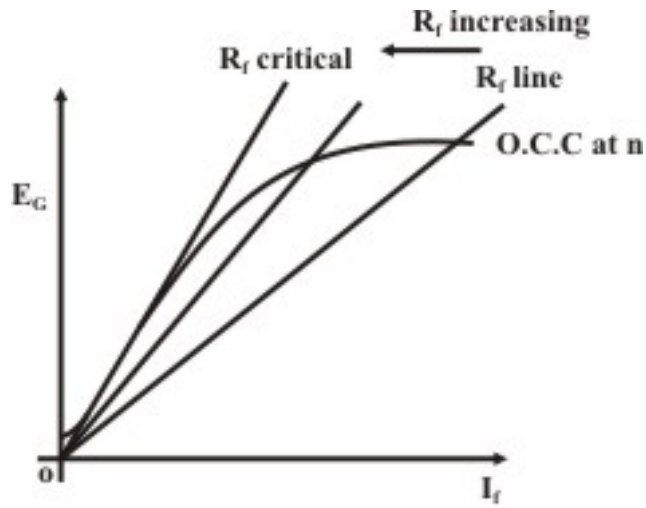

Figure 38.7: Critical field resistance.

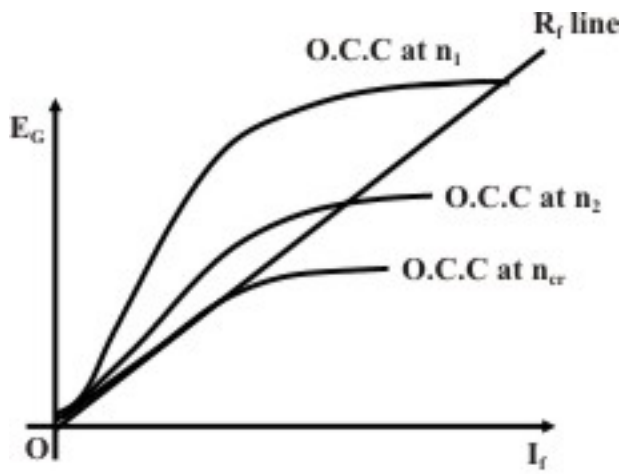

Figure 38.8: Critical speed.

A shunt generator driven by a prime mover, can not built up voltage if it fails to comply any of the conditions listed below.

1. The machine must have some *residual* field. To ensure this one can at the beginning excite the field separately with some constant current. Now removal of this current will leave some amount of residual field.
2. Field winding connection should be such that the residual flux is strengthened by the field current in the coil. If due to this, no voltage is being built up, reverse the field terminal connection.
3. Total field circuit resistance must be less than the critical field resistance.

38.2.3 Load characteristic of shunt generator

With switch S in open condition, the generator is practically under no load condition as field current is pretty small. The voltmeter reading will be E_o as shown in figures (38.5) and (38.6). In other words, E_o and $I_a = 0$ is the first point in the load characteristic. To load the machine S is closed and the load resistances decreased so that it delivers load current I_L. Unlike separately

excited motor, here $I_L \neq I_a$. In fact, for shunt generator, $I_a = I_L - I_f$. So increase of I_L will mean increase of I_a as well. The drop in the terminal voltage will be caused by the usual $I_a r_a$ drop, brush voltage drop and armature reaction effect. Apart from these, in shunt generator, as terminal voltage decreases, field current hence ϕ also decreases causing additional drop in terminal voltage. Remember in shunt generator, field current is decided by the terminal voltage by virtue of its parallel connection with the armature. Figure (38.9) shows the plot of terminal voltage versus armature current which is called the *load characteristic*. One can of course translate the V versus I_a characteristic into V versus I_L characteristic by subtracting the correct value of the field current from the armature current. For example, suppose the machine is loaded such that terminal voltage becomes V_1 and the armature current is I_{a1}. The field current at this load can be read from the field resistance line corresponding to the existing voltage V_1 across the field as shown in figure (38.9). Suppose I_{f1} is the noted field current. Therefore, $I_{L1} = I_{a1} - I_{f1}$.Thus the point $[I_{a1}, V_1]$ is translated into $[I_{L1}, V_1]$ point. Repeating these step for all the points we can get the V versus I_L characteristic as well. It is interesting to note that the generated voltage at this loading is E_{G1} (obtained from OCC corresponding to I_{f1}). Therefore the length PQ must represents sum of all the voltage drops that has taken place in the armature when it delivers I_a.

$$
\begin{aligned}
E_{G1} - V_1 &= length PQ \\
&= I_{a1} r_a + \text{brush drop} + \text{drop due to armature reaction} \\
E_{G1} - V_1 &\approx I_{a1} r_a \text{ neglecting brush drop \& armature reaction drop,}
\end{aligned}
$$

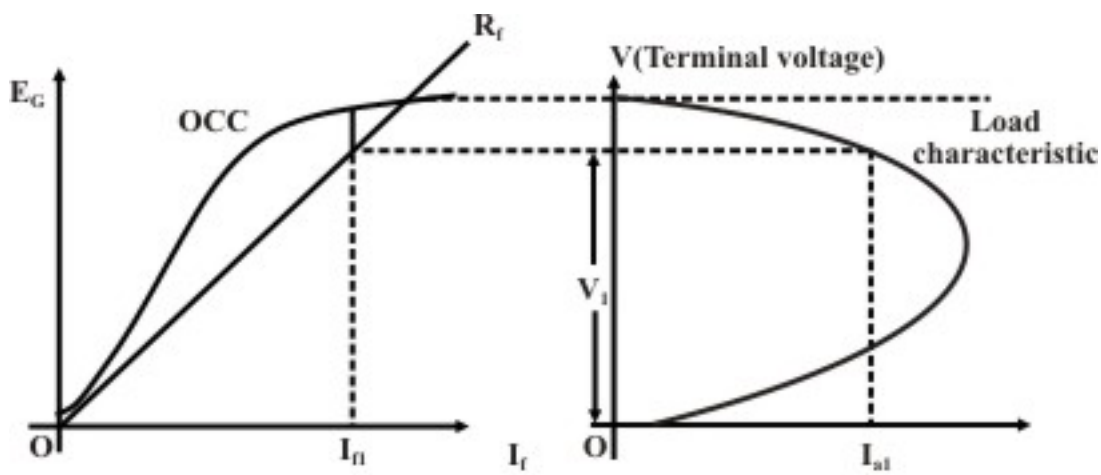

Figure 38.9: Load characteristic of Shunt generator.

38.2.4 Prediction of approximate load characteristic from OCC & R_f line

We have seen in the preceding section that for a particular load current I_a, the terminal voltage V and the generated voltage E_G are related by $E_G - V \approx I_a r_a$. This relationship along with OCC and R_f line can be used to predict the load characteristic. This can be done in following two ways.

First way

1. We know loading eventually makes terminal voltage V less than the no load voltage E_o.
2. Choose a particular value of $V(< E_o)$. The idea is to know which I_a has changed the terminal voltage to V. Refer to figure (38.10).

3. Now draw a horizontal line NQ which intersects the field resistance line at Q.
4. Draw a vertical line PQ intersecting OCC at P.
5. Length PQ must be $I_a r_a$ drop.
6. Knowing the value of r_a, $I_a = \frac{PQ}{r_a}$, can be calculated.
7. The above steps are repeated, for other values of chosen *V*.
8. Plot of all these pair of [*V*, I_a] will give the load characteristic.

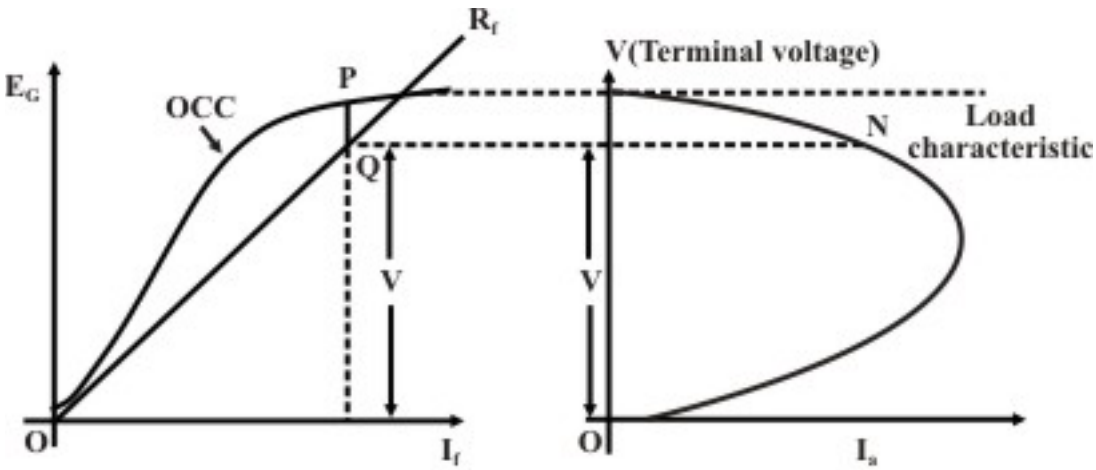

Figure 38.10: Finding I_a knowing V.

Alternative method

In this method which is also graphical, we try to estimate the terminal voltage *V* for a given armature current I_a. Following steps may be adopted for the purpose.

1. Choose a particular value of armature current I_a.
2. Since armature resistance is known, calculate $I_a r_a$.
3. Mark a point K on the voltage axis of OCC such that OK = $I_a r_a$.
4. Draw a line parallel to R_f line and passing through point K. This line in general expected to intersect the OCC at two points G and H as shown in figure (38.11).
5. Draw two horizontal lines passing through G and H respectively.
6. Draw a vertical line in load characteristic plane at the chosen current I_a. This vertical line intersect the two horizontal lines drawn in the previous step at points P & Q respectively.
7. Thus we find the generator can deliver the chosen I_a at two different terminal voltages of V_p and V_Q. So the load characteristic is a double valued function.
8. It should be noted that, there exists a line parallel to the R_f line which touches the OCC only at *one point* S as shown. For this we shall get a single terminal voltage as represented by the point T. The corresponding armature current ($I_{a\,max}$) is the maximum .value which the generator is capable of delivering.

9. In fact it explains why the load characteristic takes a turn toward left after reaching a maximum current.

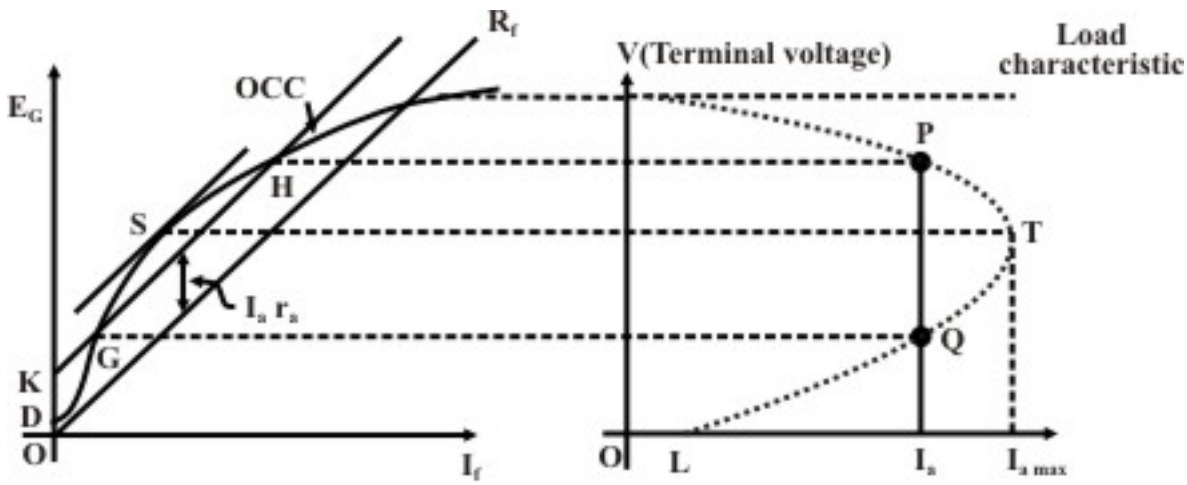

Figure 38.11: Finding I_a knowing V.

As we go on decreasing the load resistance, terminal voltage falls. Field being connected across the armature, ϕ also falls reducing the generated voltage E_G which was not the case with separately excited generator where ϕ produced was independent of the terminal voltage of the generator. Thus after reaching $I_{a\ max}$, any further decrement in the load resistance causes E_G to fall substantially to make $I_a < I_{a\ max}$, In fact, If we reduce R_L to the extent that $R_L = 0$ (i.e., putting a short circuit across the terminals), field current becomes zero making E_G = residual voltage = OD. Therefore steady short circuit current of the generator will be pretty small and equal to $\frac{OD}{r_a} = OL$.

38.3 Compound generator

As introduced earlier, compound machines have both series and shunt field coils. On each pole these two coils are placed as shown in figure 38.1. Series field coil has low resistance, fewer numbers of turns with large cross sectional area and connected either in series with the armature or in series with the line. On the other hand shunt field coil has large number of turns, higher resistance, small cross sectional area and either connected in parallel across the armature or connected in parallel across the series combination of the armature and the series field. Depending on how the field coils are connected, compound motors are classified as *short shunt* and *long shunt* types as shown in figures 38.12 and 38.13

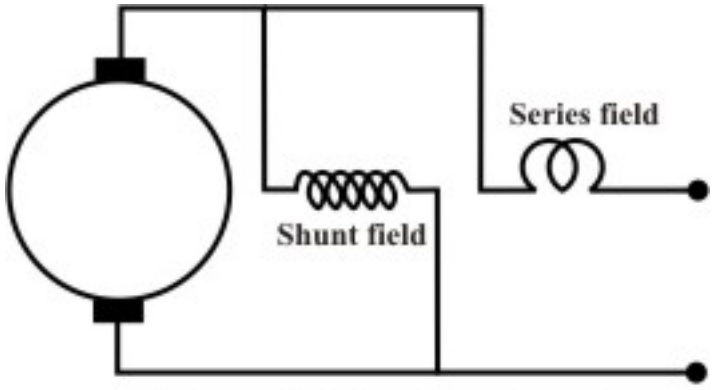

Figure 38.12: Short shunt connection.

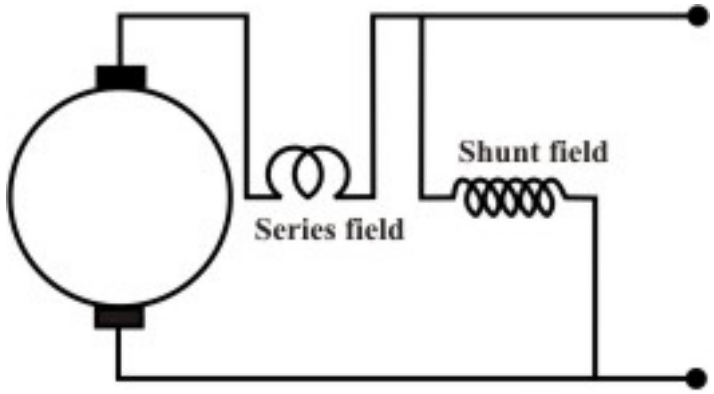

Figure 38.13: Long shunt connection.

Series field coil may be connected in such a way that the mmf produced by it aids the shunt field mmf-then the machine is said to be cumulative compound machine, otherwise if the series field mmf acts in opposition with the shunt field mmf – then the machine is said to be differential compound machine.

In a compound generator, series field coil current is load dependent. Therefore, for a cumulatively compound generator, with the increase of load, flux per pole increases. This in turn increases the generated emf and terminal voltage. Unlike a shunt motor, depending on the strength of the series field mmf, terminal voltage at full load current may be same or more than the no load voltage. When the terminal voltage at rated current is same that at no load condition, then it is called a level compound generator. If however, terminal voltage at rated current is more than the voltage at no load, it is called a over compound generator. The load characteristic of a cumulative compound generator will naturally be above the load characteristic of a shunt generator as depicted in figure 38.14. At load current higher than the rated current, terminal voltage starts decreasing due to saturation, armature reaction effect and more drop in armature and series field resistances.

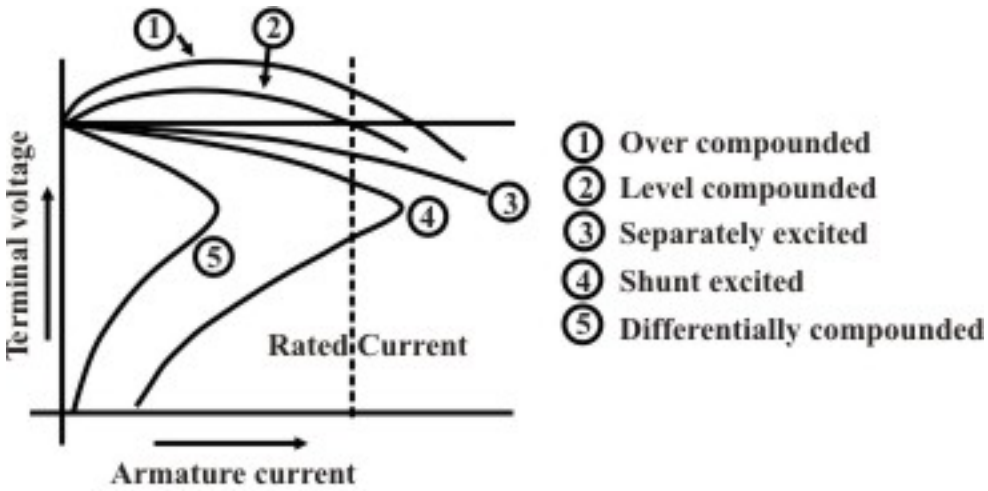

Figure 38.14: Load characteristics of d.c generators.

To understand the usefulness of the series coil in a compound machine let us undertake the following simple calculations. Suppose as a shunt generator (series coil not connected) 300 AT/pole is necessary to get no load terminal voltage of 220 V. Let the terminal voltage becomes 210 V at rated armature current of 20 A. To restore the terminal voltage to 220 V, shunt excitation needs to be raised such that AT/pole required is 380 at 20 A of rated current. As a level compound generator, the extra AT (380-300 = 80) will be provided by series field. Therefore, number of series turns per pole will be 80/20 = 4. Thus in a compound generator series field will automatically provide the extra AT to arrest the drop in terminal voltage which otherwise is inevitable for a shunt generator.

For the differentially compounded generator where series field mmf opposes the shunt field mmf the terminal voltage decreases fast with the increase in the load current.

38.4 Tick the correct answer

1. For building up of voltage in a d.c shunt generator,

   (A) Field circuit resistance should be greater than a critical value.
   (B) Field circuit resistance, R_f should $\rightarrow 0$.
   (C) Field circuit resistance should be less than a critical value.
   (D) Field circuit resistance, R_f should $\rightarrow \infty$.

2. This question is regarding the steady state armature current when dead short circuit occurs across the d.c generator terminals. Pick up the correct statement.

   (A) For a shunt generator the short circuit armature current will be many times larger than the rated current of the armature.
   (B) For a separately excited generator the short circuit armature current will be many times larger than the rated current of the armature.
   (C) For a shunt generator the short circuit armature current will be many times lower than the rated current of the armature.
   (D) For a separately excited generator the short circuit armature current will be many times lower than the rated current of the armature.

3. A shunt generator is found to develop rated voltage in the armature when driven at 1000 rpm in the clockwise direction. The generator is now first stopped and then run once again at 1000 rpm but in the anti-clock wise direction. The generator,

   (A) will develop rated voltage across the armature with same polarity as before.
   (B) will develop rated voltage across the armature with reverse polarity.
   (C) will develop a voltage lower than the rated value across the armature with reverse polarity.
   (D) will fail to excite.

4. In relation to a compound d.c machine, choose the right statement from the following.

   (A) Shunt field coil is wound over stator poles and series field coil is wound over inter poles.
   (B) Shunt field coil is wound over inter poles and series field coil is wound over stator poles.
   (C) Both series field and shunt field coils are wound over the stator poles.
   (D) Shunt field coil is wound over stator pole face and series field coil is wound over stator poles.

5. In relation to a compound d.c machine, choose the right statement from the following.

   (A) The resistance of the shunt field coil will be many times higher than the series field coil.
   (B) The resistance of the shunt field coil and the series field coil are of the same order.
   (C) The resistance of the series field coil will be many times higher than the shunt field coil.
   (D) Either of (A), (B) and (C) is true statement.

6. In relation to a compound d.c machine, choose the right statement from the following

   (A) Both series and shunt field coils have comparable and number of turns and cross sectional areas.
   (B) Shunt field coil has fewer number of turns and large cross sectional area compared to series field coil.
   (C) Series field coil has fewer number of turns and large cross sectional area compared to shunt field coil.
   (D) None of (A), (B) and (C) are correct statement.

38.5 Solve the following

1. **(a)** The O.C.C of a d.c generator having $r_a = 0.8\Omega$ and driven at 500 *rpm* is given below:

Field current (A):	2.0	3.0	4.0	5.0	6.0	7.0	8.0	9.0
Armature voltage (V):	110	155	186	212	230	246	260	271

The voltage induced due to residual field may be neglected. The machine is now connected as shunt generator and driven at 500 *rpm*.

(i) What should be the field circuit resistance in order to have no load terminal voltage to be 230V? Also calculate the critical field resistance. **(ii)** What maximum current can be supplied to the load and at what terminal voltage? Assume the speed to remain constant at 500 *rpm*.
(iii) What should be the range of variation of field circuit resistance in order to have a terminal voltage of 230V from no load to the full load condition, the full load armature current being 20A? The speed drops to 450 *rpm* at full load condition.

2. The OCC of a shunt generator running at 850 rpm is given below:

Field current (A):	0.8	1.6	2.4	3.2	4	4.8	5.6
Armature voltage (V):	28	55	75	82	100	108	115

(i) Find the open circuit induced emfs for field resistances of 22Ω and 33Ω. (ii) What should be the field resistance so that the open circuit induced emf at 850 rpm is 100 V. (iii) Find the critical speed for the field resistance found in (ii) and (iv) find the critical field resistance at 850 rpm.

Module 9

DC Machines

Version 2 EE IIT, Kharagpur

Lesson 39

D.C Motors

Contents

39 D.C Shunt Motor (Lesson-39) 4

39.1 Goals of the lesson …….. 4

39.2 Introduction ……. 4

39.3 Important Ideas……. 5

39.4 Starting of D.C shunt motor. …… 7

39.4.1 Problems of starting with full voltage. …… 7

39.4.2 A simple starter. …….. 7

39.4.3 3-point starter. ……. 8

39.5 Speed control of shunt motor …… 10

39.5.1 Speed control by varying armature resistance. ……... 10

39.5.2 Speed control by varying field current. ……... 12

39.5.3 Speed control by armature voltage variation. ……. 14

39.5.4 Ward Leonard method: combination of V_a and I_f control. …… 14

39.6 Series motor. ……..... 15

39.6.1 Characteristics of series motor. ……. 16

39.7 Speed control of series motor ……. 18

39.7.1 Speed control below base speed ……... 18

39.7.2 Speed control above base speed …… 19

39.8 Braking of d.c shunt motor: basic idea ……... 20

39.8.1 Rheostatic braking ……. 21

39.8.2 Plugging or dynamic braking ……. 21

39.8.3 Regenerative braking …… 22

39.9 Tick the correct answer …….. 23

39.10 Solve the following ……. 24

39.1 Goals of the lesson

In this lesson aspects of starting and speed control of d.c motors are discussed and explained. At the end principles of electric braking of d.c. shunt motor is discussed. After going through the lesson, the reader is expected to have clear ideas of the following.

1. The problems of starting d.c motors with full rated voltage.
2. Use and selection of variable resistance as a simple starter in the armature circuit of a d.c motor.
3. Superiority of commercial starter (3-point starter) over resistance starter. Various protective features incorporated in a commercial starter.
4. Various strategies (namely-armature resistance control, armature voltage control and field current control) adopted for controlling speed of d.c motors.
5. Importance of characteristics such as (i) speed vs. armature current and (ii) speed vs. torque which are relevant for clear understanding of speed control technique.
6. Principle of electric braking – qualitative explanation.

39.2 Introduction

Although in this section we shall mainly discuss *shunt* motor, however, a brief descriptions of (i) D.C shunt, (ii) separately excited and (iii) series motor widely used are given at the beginning.

The armature and field coils are connected in parallel in a d.c shunt motor as shown in figure 39.1 and the parallel combination is supplied with voltage V. I_L, I_a and I_f are respectively the current drawn from supply, the armature current and the field current respectively. The following equations can be written by applying KCL, and KVL in the field circuit and KVL in the armature circuit.

$$I_L = I_a + I_f \text{ applying KCL}$$

$$I_f = \frac{V}{R_f} \text{ from KVL in field circuit}$$

$$I_a = \frac{V - E_b}{r_a} \text{ from KVL in the armature circuit}$$

$$= \frac{V - k\phi n}{r_a}$$

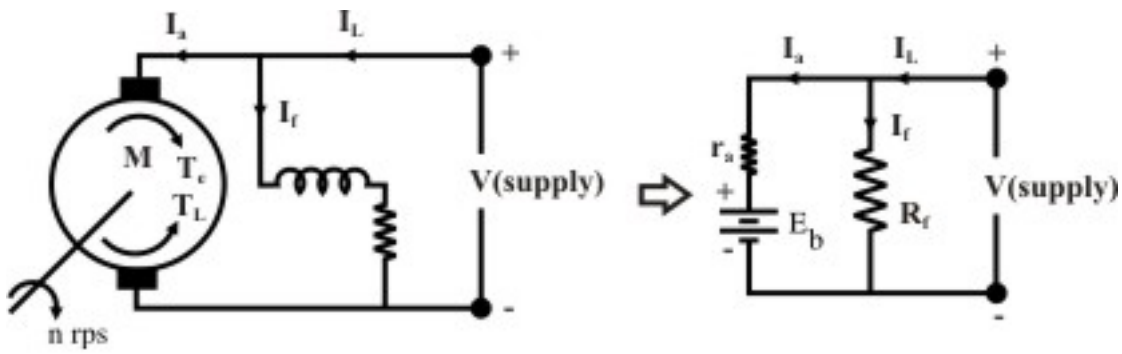

Figure 39.1: D.C shunt motor connection & its circuit representation.

39.3 Important Ideas

We have learnt in the previous lecture (37), that for motor operation:

1. Electromagnetic torque $T_e = k\phi I_a$ developed by the motor acts along the direction of rotation.

2. The load torque T_L acts in the opposite direction of rotation or in opposition to T_e.

3. If $T_e = T_L$, motor operates with *constant* speed. .

4. If at any time $T_e > T_L$, the motor will *accelerate*.

5. If at any time $T_e < T_L$, the motor will *decelerate*.

Although our main focus of study will be the operation of motor under steady state condition, a knowledge of "how motor moves from one steady state operating point to another steady operating point" is important to note. To begin with let us study, how a motor from rest condition settles to the final operating point. Let us assume the motor is absolutely under no-load condition which essentially means $T_L = 0$ and there is friction present. Thus when supply is switched on, both $I_a = V/r_a$ and ϕ will be established developing T_e. As $T_L = 0$, motor should pick up speed due to acceleration. As motor speed increases, armature current decreases since back emf E_b rises. The value of T_e also progressively decreases. But so long T_e is present, acceleration will continue, increasing speed and back emf. A time will come when supply voltage and E_b will be same making armature current I_a zero. Now T_e becomes zero and acceleration stops and motor continues to run steadily at constant speed given by $n = V/(k\phi)$ and drawing no armature current. Note that input power to the armature is zero and mechanical output power is zero as well.

Let us bring a little reality to the previous discussion. Let us not neglect frictional torque during acceleration period from rest. Let us also assume frictional torque to be constant and equal to T_{fric}. How the final operating point will be decided in this case? When supply will be switched on T_e will be developed and machine will accelerate if $T_e > T_{fric}$. With time T_e will decrease as I_a decreases. Eventually, a time will come when T_e becomes equal to T_L and motor will continue to run at constant steady no load speed n_0. The motor in the final steady state

however will continue to draw a definite amount of armature current which will produce T_e just enough to balance T_{fric}.

Suppose, the motor is running steadily at no load speed n_0, drawing no load armature I_{a0} and producing torque T_{e0} (= T_{fric}). Now imagine, a constant load torque is suddenly imposed on the shaft of the motor at $t = 0$. Since speed can not change instantaneously, at $t = 0^+$, $I_a(t = 0^+) = I_{a0}$ and $T_e(t = 0^+) = T_{e0}$. Thus, at $t = 0^+$, opposing torque is $(T_L + T_{fric}) < T_{e0}$. Therefore, the motor should start decelerating drawing more armature current and developing more T_e. Final steady operating point will be reached when, $T_e = T_{fric} + T_L$ and motor will run at a new speed lower than no load speed n_0 but drawing I_a greater than the no load current I_{a0}.

In this section, we have learnt the mechanism of how a D.C motor gets loaded. To find out steady state operating point, one should only deal with steady state equations involving torque and current. For a shunt motor, operating point may change due to (i) change in field current or ϕ, (ii) change in load torque or (iii) change in both. Let us assume the initial operating point to be:

$$\begin{aligned}
\text{Armature current} &= I_{a1} \\
\text{Field current} &= I_{f1} \\
\text{Flux per pole} &= \phi_1 \\
\text{Speed in rps} &= n_1 \\
\text{Load torque} &= T_{L1} \\
T_{e1} &= k\phi_1 I_{a1} = T_{L1} && (39.1) \\
E_{b1} &= k\phi_2 n_2 = V - I_{a1} r_a && (39.2)
\end{aligned}$$

Now suppose, we have changed field current and load torque to new values I_{f2} and T_{L2} respectively. Our problem is to find out the new steady state armature current and speed. Let,

$$\begin{aligned}
\text{New armature current} &= I_{a2} \\
\text{New field current} &= I_{f2} \\
\text{New flux per pole} &= \phi_2 \\
\text{Speed in rps} &= n_2 \\
\text{New load torque} &= T_{L2} \\
T_{e2} &= k\phi_2 I_{a2} = T_{L2} && (39.3) \\
E_{b2} &= k\phi_2 n_2 = V - I_{a2} r_a && (39.4)
\end{aligned}$$

Now from equations 39.1 and 39.3 we get:

$$\frac{T_{e2}}{T_{e1}} = \frac{T_{L2}}{T_{L1}} = \frac{k\phi_2 I_{a2}}{k\phi_1 I_{a1}} \qquad (39.5)$$

From equation 39.5, one can calculate the new armature current I_{a2}, the other things being known. Similarly using equations 39.2 and 39.4 we get:

$$\frac{E_{b1}}{E_{b2}} = \frac{k\phi_2 n_2}{k\phi_1 n_1} = \frac{V - I_{a1} r_a}{V - I_{a2} r_a} \tag{39.6}$$

Now we can calculate new steady state speed n_2 from equation 39.6.

39.4 Starting of D.C shunt motor

39.4.1 Problems of starting with full voltage

We know armature current in a d.c motor is given by

$$I_a = \frac{V - E_b}{r_a} = \frac{V - k\phi n}{r_a}$$

At the instant of starting, rotor speed $n = 0$, hence starting armature current is $I_{ast} = \frac{V}{r_a}$. Since, armature resistance is quite small, starting current may be quite high (many times larger than the rated current). A large machine, characterized by large rotor inertia (J), will pick up speed rather slowly. Thus the level of high starting current may be maintained for quite some time so as to cause serious damage to the brush/commutator and to the armature winding. Also the source should be capable of supplying this burst of large current. The other loads already connected to the same source, would experience a dip in the terminal voltage, every time a D.C motor is attempted to start with full voltage. This dip in supply voltage is caused due to sudden rise in voltage drop in the source's internal resistance. The duration for which this drop in voltage will persist once again depends on inertia (size) of the motor.

Hence, for small D.C motors extra precaution may not be necessary during starting as large starting current will very quickly die down because of fast rise in the back emf. However, for large motor, a *starter* is to be used during starting.

39.4.2 A simple starter

To limit the starting current, a suitable external resistance R_{ext} is connected in series (Figure 39.2(a)) with the armature so that $I_{ast} = \frac{V}{R_{ext} + r_a}$. At the time of starting, to have sufficient starting torque, field current is maximized by keeping the external field resistance R_f, to zero value. As the motor picks up speed, the value of R_{ext} is gradually decreased to zero so that during running no external resistance remains in the armature circuit. But each time one has to *restart* the motor, the external armature resistance must be set to maximum value by moving the jockey manually. Imagine, the motor to be running with $R_{ext} = 0$ (Figure 39.2(b)).

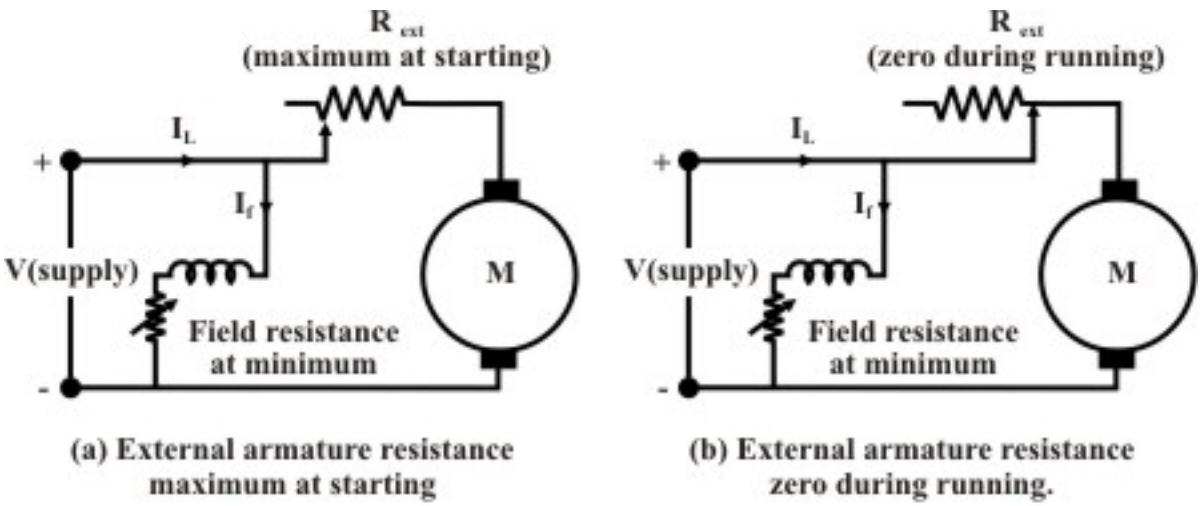

Figure 39.2: A simple starter in the form of external armature resistance.

Now if the supply goes off (due to some problem in the supply side or due to load shedding), motor will come to a stop. All on a sudden, let us imagine, supply is restored. This is then nothing but full voltage starting. In other words, one should be constantly alert to set the resistance to maximum value whenever the motor comes to a stop. This is one major limitation of a simple rheostatic starter.

39.4.3 3-point starter

A "3-point starter" is extensively used to start a D.C shunt motor. It not only overcomes the difficulty of a plain resistance starter, but also provides additional *protective features* such as *over load protection* and *no volt protection*. The diagram of a 3-point starter connected to a shunt motor is shown in figure 39.3. Although, the circuit looks a bit clumsy at a first glance, the basic working principle is same as that of plain resistance starter.

The starter is shown enclosed within the dotted rectangular box having three terminals marked as A, L and F for external connections. Terminal A is connected to one armature terminal Al of the motor. Terminal F is connected to one field terminal F1 of the motor and terminal L is connected to one supply terminal as shown. F2 terminal of field coil is connected to A2 through an external variable field resistance and the common point connected to supply (-ve). The external armatures resistances consist of several resistances connected in series and are shown in the form of an arc. The junctions of the resistances are brought out as terminals (called studs) and marked as 1,2,.. .12. Just beneath the resistances, a continuous *copper strip* also in the form of an arc is present.

There is a *handle* which can be moved in the clockwise direction against the spring tension. The spring tension keeps the handle in the OFF position when no one attempts to move it. Now let us trace the circuit from terminal L (supply + ve). The wire from L passes through a small electro magnet called OLRC, (the function of which we shall discuss a little later) and enters through the handle shown by dashed lines. Near the end of the handle two copper strips are firmly connected with the wire. The furthest strip is shown circular shaped and the other strip is shown to be rectangular. When the handle is moved to the right, the *circular strip* of the handle will make contacts with resistance terminals 1, 2 etc. progressively. On the other hand, the

rectangular strip will make contact with the continuous *arc copper strip*. The other end of this strip is brought as terminal F after going through an electromagnet coil (called NVRC). Terminal F is finally connected to motor field terminal Fl.

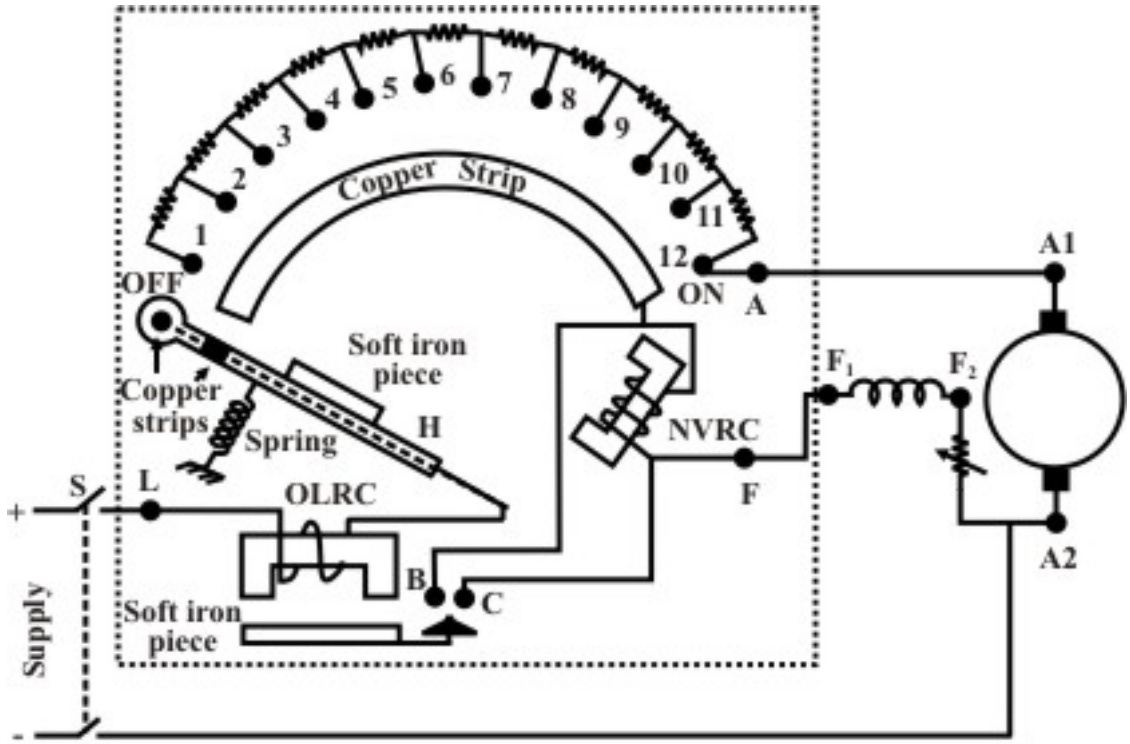

Figure 39.3: A 3-point starter.

Working principle

Let us explain the operation of the starter. Initially the handle is in the OFF position. Neither armature nor the field of the motor gets supply. Now the handle is moved to stud number 1. In this position armature and all the resistances in series gets connected to the supply. Field coil gets full supply as the rectangular strip makes contact with arc copper strip. As the machine picks up speed handle is moved further to stud number 2. In this position the external resistance in the armature circuit is less as the first resistance is left out. Field however, continues to get full voltage by virtue of the continuous arc strip. Continuing in this way, all resistances will be left out when stud number 12 (ON) is reached. In this position, the electromagnet (NVRC) will attract the soft iron piece attached to the handle. Even if the operator removes his hand from the handle, it will still remain in the ON position as spring restoring force will be balanced by the force of attraction between NVRC and the soft iron piece of the handle. The *no volt release coil* (NVRC) carries same current as that of the field coil. In case supply voltage goes off, field coil current will decrease to zero. Hence NVRC will be deenergised and will not be able to exert any force on the soft iron piece of the handle. Restoring force of the spring will bring the handle back in the OFF position.

The starter also provides *over load* protection for the motor. The other electromagnet, OLRC *overload release coil* along with a soft iron piece kept under it, is used to achieve this. The current flowing through OLRC is the line current I_L drawn by the motor. As the motor is loaded, I_a hence I_L increases. Therefore, I_L is a measure of loading of the motor. Suppose we want that the motor should not be over loaded beyond rated current. Now gap between the electromagnet

and the soft iron piece is so adjusted that for $I_L \le I_{rated}$, the iron piece will not be pulled up. However, if $I_L \le I_{rated}$ force of attraction will be sufficient to pull up iron piece. This upward movement of the iron piece of OLRC is utilized to de-energize NVRC. To the iron a copper strip (Δ shaped in figure) is attached. During over loading condition, this copper strip will also move up and put a *short circuit* between two terminals B and C. Carefully note that B and C are nothing but the two ends of the NVRC. In other words, when over load occurs a short circuit path is created across the NVRC. Hence NVRC will not carry any current now and gets deenergised. The moment it gets deenergised, spring action will bring the handle in the OFF position thereby disconnecting the motor from the supply.

Three point starter has one disadvantage. If we want to run the machine at higher speed (above rated speed) by *field weakening* (i.e., by reducing field current), the strength of NVRC magnet may become so weak that it will fail to hold the handle in the ON position and the spring action will bring it back in the OFF position. Thus we find that a false disconnection of the motor takes place even when there is neither *over load* nor any *sudden disruption of supply*.

39.5 Speed control of shunt motor

We know that the speed of shunt motor is given by:

$$n = \frac{V_a - I_a r_a}{k\phi}$$

where, V_a is the voltage applied across the armature and ϕ is the flux per pole and is proportional to the field current I_f. As explained earlier, armature current I_a is decided by the mechanical load present on the shaft. Therefore, by varying V_a and I_f we can vary n. For fixed supply voltage and the motor connected as shunt we can vary V_a by controlling an external resistance connected in series with the armature. I_f of course can be varied by controlling external field resistance R_f connected with the field circuit. Thus for .shunt motor we have essentially two methods for controlling speed, namely by:

1. varying armature resistance.
2. varying field resistance.

39.5.1 Speed control by varying armature resistance

The inherent armature resistance r_a being small, speed n versus armature current I_a characteristic will be a straight line with a small negative slope as shown in figure 39.4. In the discussion to follow we shall not disturb the field current from its rated value. At no load (i.e., $I_a = 0$) speed is highest and $n_0 = \frac{V_a}{k\phi} = \frac{V}{k\phi}$. Note that for shunt motor voltage applied to the field and armature circuit are same and equal to the supply voltage V. However, as the motor is loaded, $I_a r_a$ drop increases making speed a little less than the no load speed n_0. For a well designed shunt motor this drop in speed is small and about 3 to 5% with respect to no load speed. This drop in speed from no load to full load condition expressed as a percentage of no load speed is called the *inherent speed regulation* of the motor.

$$\text{Inherent \% speed regulation} = \frac{n - n_0}{n_0} \times 100$$

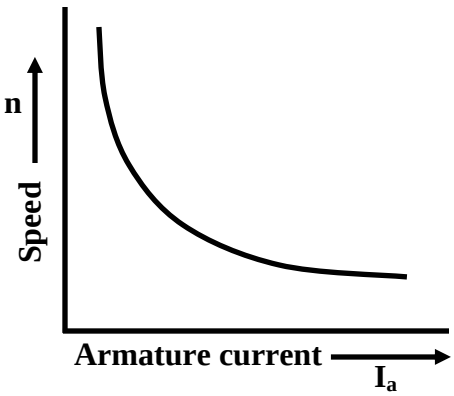

Figure 39.4: Speed vs. armature current characteristic.

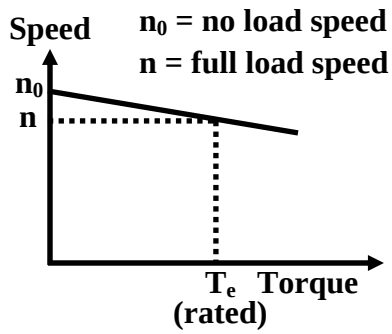

Figure 39.5: Speed vs. torque characteristic.

It is for this reason, a d.c shunt motor is said to be practically a constant speed motor (with no external armature resistance connected) since speed drops by a small amount from no load to full load condition.

Since $T_e = k\phi I_a$, for constant ϕ operation, T_e becomes simply proportional to I_a. Therefore, speed vs. torque characteristic is also similar to speed vs. armature current characteristic as shown in figure 39.5.

The slope of the n vs I_a or n vs T_e characteristic can be modified by deliberately connecting external resistance r_{ext} in the armature circuit. One can get a family of speed vs. armature curves as shown in figures 39.6 and 39.7 for various values of r_{ext}. From these characteristic it can be explained how speed control is achieved. Let us assume that the load torque T_L is constant and field current is also kept constant. Therefore, since steady state operation demands $T_e = T_L$, $T_e = k\phi I_a$ too will remain constant; which means I_a will not change. Suppose $r_{ext} = 0$, then at rated load torque, operating point will be at C and motor speed will be n. If additional resistance r_{ext1} is introduced in the armature circuit, new steady state operating speed will be n_1 corresponding to the operating point D. In this way one can get a speed of n_2 corresponding to the operating point E, when r_{ext2} is introduced in the armature circuit. This same load torque is supplied at various speed. Variation of the speed is smooth and speed will decrease smoothly if r_{ext} is increased. Obviously, this method is suitable for controlling speed below the *base* speed and for supplying constant rated load torque which ensures rated armature current always. Although, this method provides smooth wide range speed control (from base speed down to zero speed), has a serious draw back since energy loss takes place in the external resistance r_{ext} reducing the efficiency of the motor.

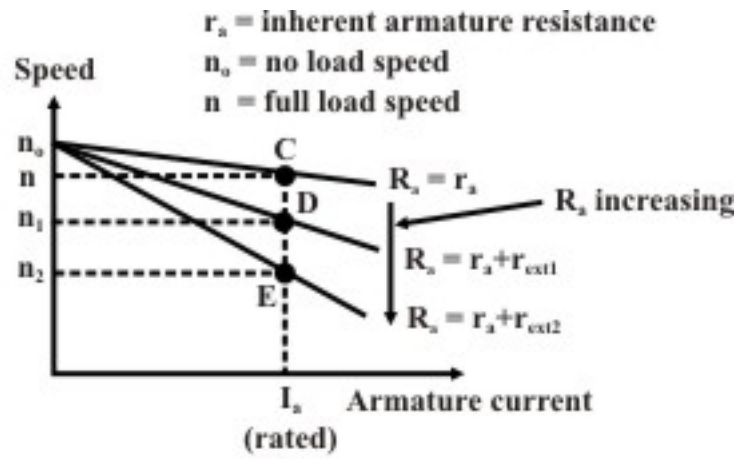

Figure 39.6: Family of speed vs. armature current characteristic.

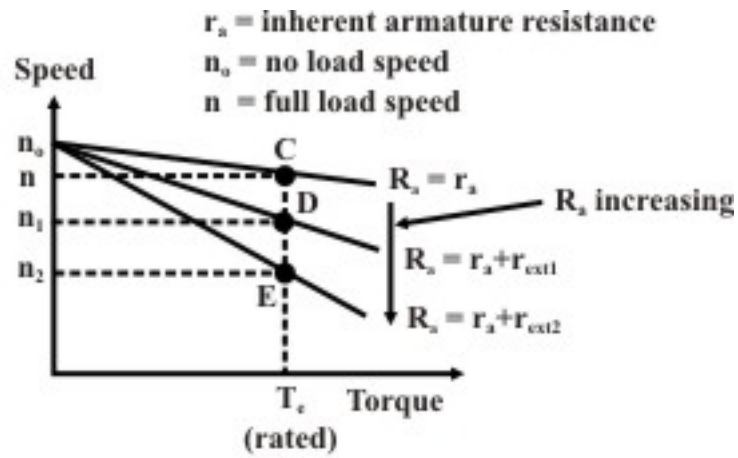

Figure 39.7: Family of speed vs. Torque current characteristic.

39.5.2 Speed control by varying field current

In this method field circuit resistance is varied to control the speed of a d.c shunt motor. Let us rewrite .the basic equation to understand the method.

$$n = \frac{V - I_a r_a}{k\phi}$$

If we vary I_f, flux ϕ will change, hence speed will vary. To change I_f an external resistance is connected in series with the field windings. The field coil produces rated flux when no external resistance is connected and rated voltage is applied across field coil. It should be understood that we can only decrease flux from its rated value by adding external resistance. Thus the speed of the motor will rise as we decrease the field current and speed control above the *base* speed will be achieved. Speed versus armature current characteristic is shown in figure 39.8 for two flux values ϕ and ϕ_1. Since $\phi_1 < \phi$, the no load speed $n_o^{'}$ for flux value ϕ_1 is more than the no load speed n_o corresponding to ϕ. However, this method will not be suitable for constant load torque.

To make this point clear, let us assume that the load torque is constant at rated value. So from the initial steady condition, we have $T_{L\,rated} = T_{e1} = k\phi I_{a\,rated}$. If load torque remains constant and flux is reduced to ϕ_1, new armature current in the steady state is obtained from $k\phi_1 I_{a1} = T_{L\,rated}$. Therefore new armature current is

$$I_{a1} = \frac{\phi}{\phi_1} I_{a\,rated}$$

But the fraction, $\frac{\phi}{\phi_1} > 1$; hence new armature current will be greater than the rated armature current and the motor will be overloaded. This method therefore, will be suitable for a load whose torque demand decreases with the rise in speed keeping the output power constant as shown in figure 39.9. Obviously this method is based on *flux weakening* of the main field. Therefore at higher speed main flux may become so weakened, that armature reaction effect will be more pronounced causing problem in commutation.

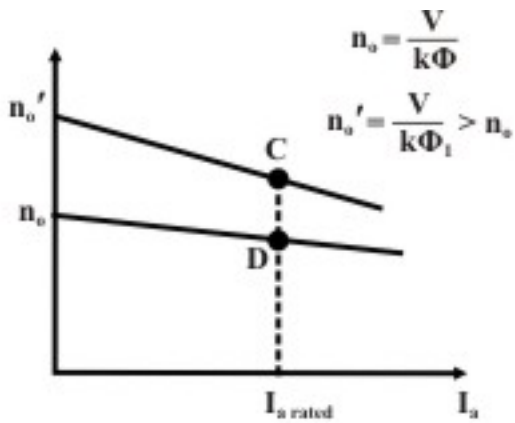

At C, higher speed but less torque
At D, lower speed but higher torque

Figure 39.8: Family of speed vs. armature current characteristic.

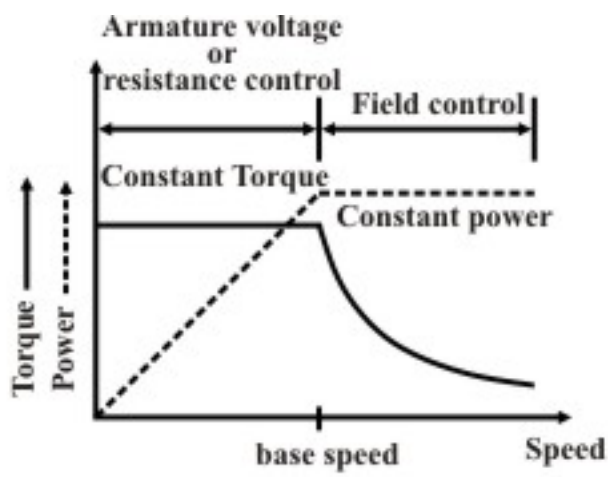

Figure 39.9: Constant torque & power operation.

39.5.3 Speed control by armature voltage variation

In this method of speed control, armature is supplied from a separate variable d.c voltage source, while the field is separately excited with fixed rated voltage as shown in figure 39.10. Here the armature resistance and field current are not varied. Since the no load speed $n_0 = \frac{V_a}{k\phi}$, the speed versus I_a characteristic will shift parallely as shown in figure 39.11 for different values of V_a.

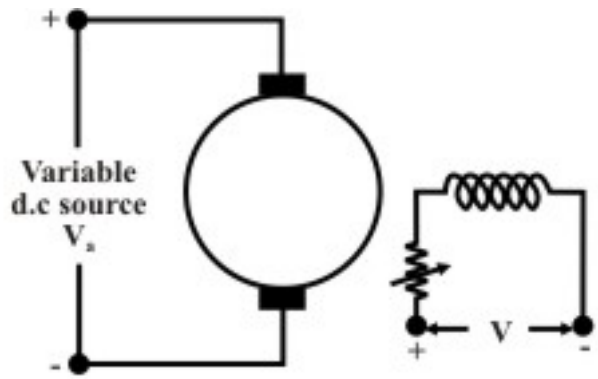

Figure 39.10: Speed control by controlling armature voltage.

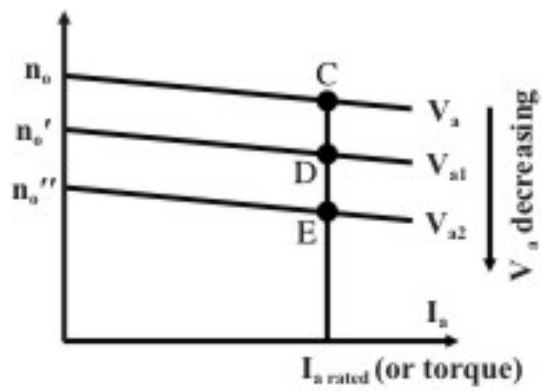

Figure 39.11: Family of *n* VS. I_a characteristics.

As flux remains constant, this method is suitable for constant torque loads. In a way armature voltage control method is similar to that of armature resistance control method except that the former one is much superior as no extra power loss takes place in the armature circuit. Armature voltage control method is adopted for controlling speed from base speed down to very small speed as one should not apply across the armature a voltage which is higher than the rated voltage.

39.5.4 Ward Leonard method: combination of V_a and I_f control

In this scheme, both field and armature control are integrated as shown in figure 39.12. Arrangement for field control is rather simple. One has to simply connect an appropriate rheostat in the field circuit for this purpose. However, in the pre power electronic era, obtaining a *variable* d.c supply was not easy and a separately excited d.c generator was used to supply the motor armature. Obviously to run this generator, a *prime mover* is required. A 3-phase induction motor is used as the prime mover which is supplied from a 3-phase supply. By controlling the

field current of the generator, the generated emf, hence V_a can be varied. The potential divider connection uses two rheostats in parallel to facilitate reversal of generator field current.

First the induction motor is started with generator field current zero (by adjusting the jockey positions of the rheostats). Field supply of the motor is switched on with motor field rheostat set to zero. The applied voltage to the motor V_a, can now be gradually increased to the rated value by slowly increasing the generator field current. In this scheme, no starter is required for the d.c motor as the applied voltage to the armature is gradually increased. To control the speed of the d.c motor below base speed by armature voltage, excitation of the d.c generator is varied, while to control the speed above base speed field current of the d.c motor is varied maintaining constant V_a. Reversal of direction of rotation of the motor can be obtained by adjusting jockeys of the generator field rheostats. Although, wide range smooth speed control is achieved, the cost involved is rather high as we require one additional d.c generator and a 3-phase induction motor of simialr rating as that of the d.c motor whose speed is intended to be controlled.

In present day, variable d.c supply can easily be obtained from a.c supply by using controlled rectifiers thus avoiding the use of additional induction motor and generator set to implement Ward leonard method.

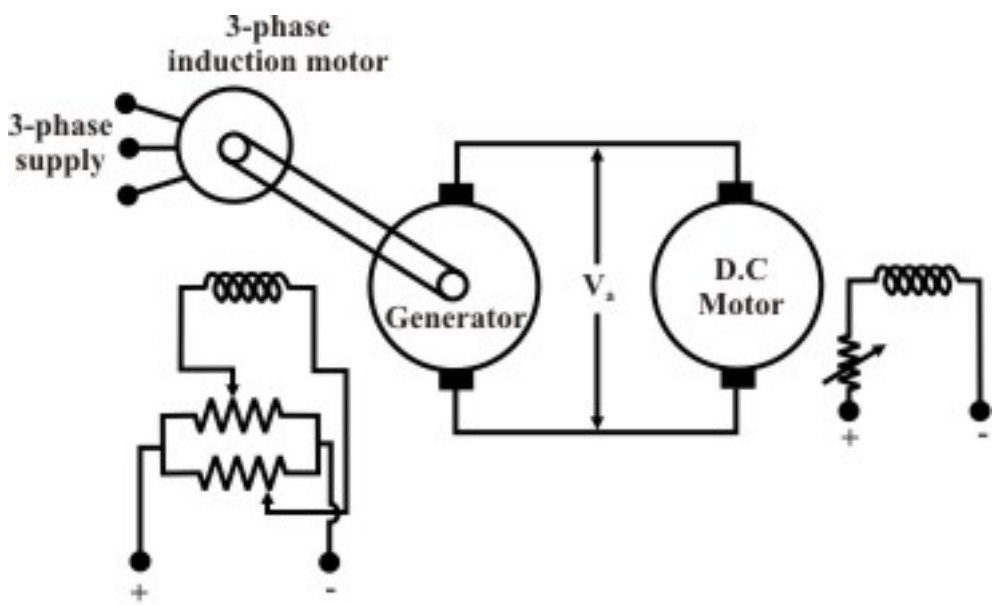

Figure 39.12: Scheme for Ward Leonard method.

39.6 Series motor

In this motor the field winding is connected in series with the armature and the combination is supplied with d.c voltage as depicted in figure 39.13. Unlike a shunt motor, here field current is not independent of armature current. In fact, field and armature currents are equal i.e., $I_f = I_a$. Now torque produced in a d.c motor is:

$$
\begin{aligned}
T &\propto \phi I_a \\
&\propto I_f I_a \\
&\propto I_a^2 \text{ before saturation sets in i.e., } \phi \propto I_a \\
&\propto I_a \text{ after saturation sets in at large } I_a
\end{aligned}
$$

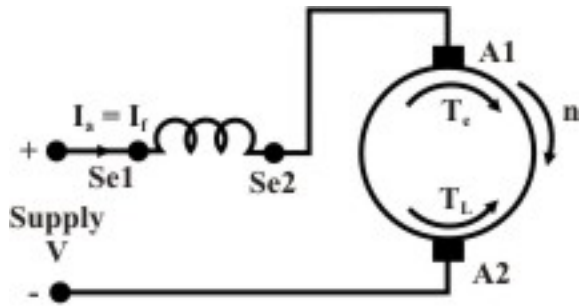

Figure 39.13: Series motor.

Since torque is proportional to the square of the armature current, starting torque of a series motor is quite high compared to a similarly rated d.c shunt motor.

39.6.1 Characteristics of series motor

Torque vs. armature current characteristic

Since $T \propto I_a^2$ in the linear zone and $T \propto I_a$ in the saturation zone, the T vs. I_a characteristic is as shown in figure 39.14

speed vs. armature current

From the KVL equation of the motor, the relation between speed and armature current can be obtained as follows:

$$V = I_a\left(r_a + r_{se}\right) + E_b$$

$$= I_a r + k\phi n$$

$$\text{or, } n = \frac{V - I_a r}{k\phi}$$

$$\text{In the linear zone } n = \frac{V - I_a r}{k' I_a}$$

$$= \frac{V}{k' I_a} - \frac{r}{k'}$$

$$\text{In the saturation zone } n = \frac{V - I_a r}{k'\phi_{sat}}$$

The relationship is inverse in nature making speed dangerously high as $I_a \to 0$. Remember that the value of I_a, is a measure of degree of loading. Therefore, a series motor should never be operated under no load condition. Unlike a shunt motor, a series motor has no finite no load speed. Speed versus armature current characteristic is shown in figure nvsia:side: b.

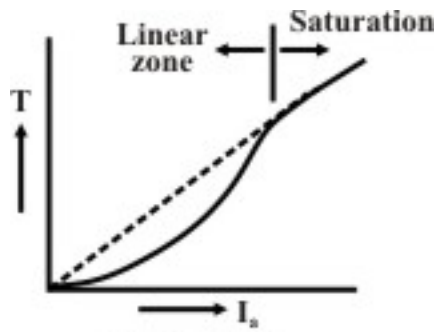

Figure 39.14

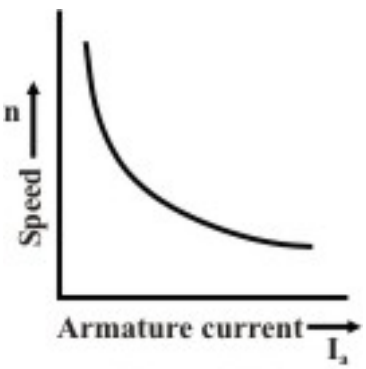

Figure 39.15

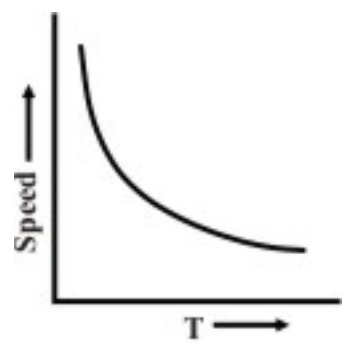

Figure 39.16

speed vs. torque characteristic

Since $I_a \propto \sqrt{T}$ in the linear zone, the relationship between speed and torque is

$$\frac{V}{k''\sqrt{T}} - \frac{r}{k'}$$

k'' and k' represent appropriate constants to take into account the proportionality that exist between current, torque and flux in the linear zone. This relation is also inverse in nature indicating once again that at light load or no load $(T \to 0)$ condition; series motor speed approaches a dangerously high value. The characteristic is shown in figure 39.16. For this reason, a series motor is never connected to mechanical load through belt drive. If belt snaps, the motor becomes unloaded and as a consequence speed goes up unrestricted causing mechanical damages to the motor.

39.7 Speed control of series motor

39.7.1 Speed control below base speed

For constant load torque, steady armature current remains constant, hence flux also remains constant. Since the machine resistance $r_a + r_{se}$ is quite small, the back emf E_b is approximately equal to the armature terminal voltage V_a. Therefore, speed is proportional to V_a. If V_a is reduced, speed too will be reduced. This V_a can be controlled either by connecting external resistance in series or by changing the supply voltage.

Series-parallel connection of motors

If for a drive two or more (even number) of identical motors are used (as in traction), the motors may be suitably connected to have different applied voltages across the motors for controlling speed. In series connection of the motors shown in figure 39.17, the applied voltage across each motor is $V/2$ while in parallel connection shown in figure 39.18, the applied voltage across each motor is V. The back emf in the former case will be approximately half than that in the latter case. For same armature current in both the cases (which means flux per pole is same), speed will be half in series connection compared to parallel connection.

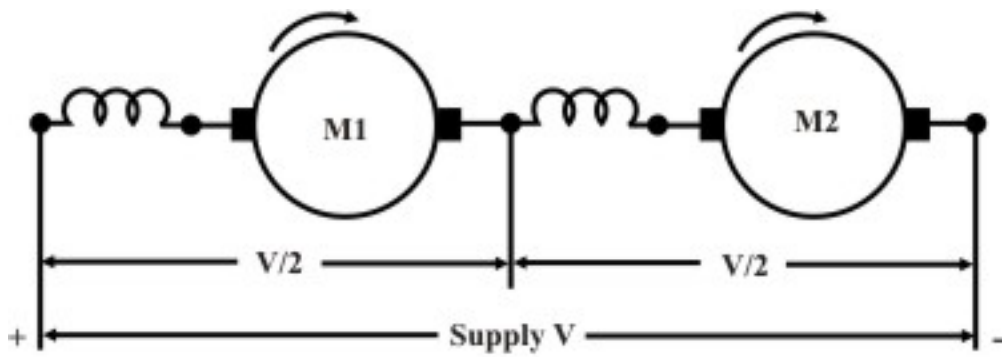

Figure 39.17: Motors connected in series.

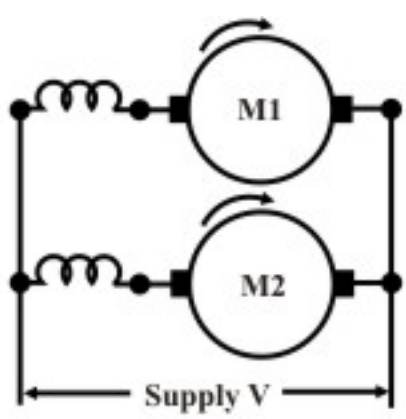

Figure 39.18: Motors connected in parallel.

39.7.2 Speed control above base speed

Flux or field current control is adopted to control speed above the base speed. In a series motor, independent control of field current is not so obvious as armature and field coils are in series. However, this can be achieved by the following methods:

1. **Using a *diverter* resistance connected across the field coil.**
   In this method shown in figure 39.19, a portion of the armature current is diverted through the diverter resistance. So field current is now not equal to the armature current; in fact it is less than the armature current. Flux weakening thus caused, raises the speed of the motor.

2. **Changing number of turns of field coil provided with tapings.**
   In this case shown figure 39.20, armature and field currents are same. However provision is kept to change the number of turns of the field coil. When number of turns changes, field mmf $N_{se}I_f$ changes, changing the flux hence speed of the motor.

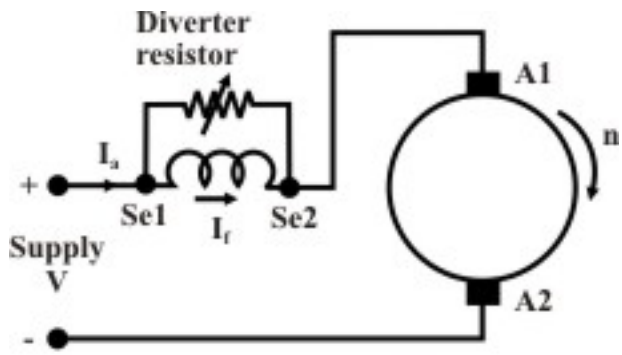

Figure 39.19: Field control with diverter.

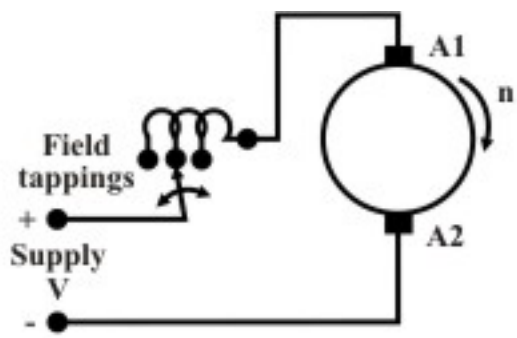

Figure 39.20: Field control with tappings.

3. **Connecting field coils wound over each pole in series or in. parallel.**
   Generally the field terminals of a d.c machine are brought out after connecting the field coils (wound over each pole) in series. Consider a 4 pole series motor where there will be 4 individual coils placed over the poles. If the terminals of the individual coils are brought out, then there exist several options for connecting them. The four coils could be connected in series as in figure 39.21; the 4 coils could be connected in parallel or parallel combination of 2 in series and other 2 in series as shown in figure 39.22. n figure For series connection of the coils (figure 39.21) flux produced is proportional to I_a and

for series-parallel connection (figure 39.22) flux produced is proportional to $\frac{I_a}{2}$. Therefore, for same armature current I_a, flux will be doubled in the second case and naturally speed will be approximately doubled as back emf in both the cases is close to supply voltage V. Thus control of speed in the ratio of 1:2 is possible for series parallel connection.

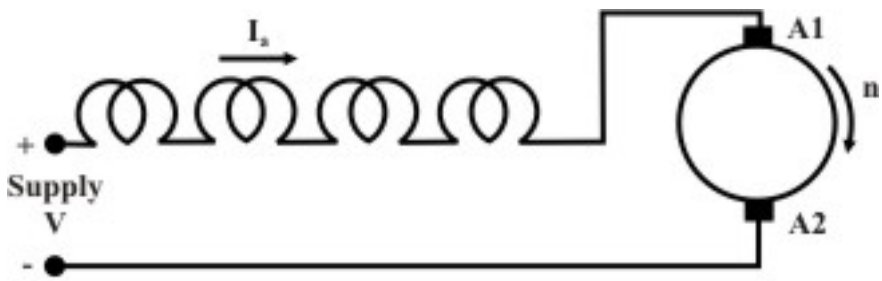

Figure 39.21: coils in series.

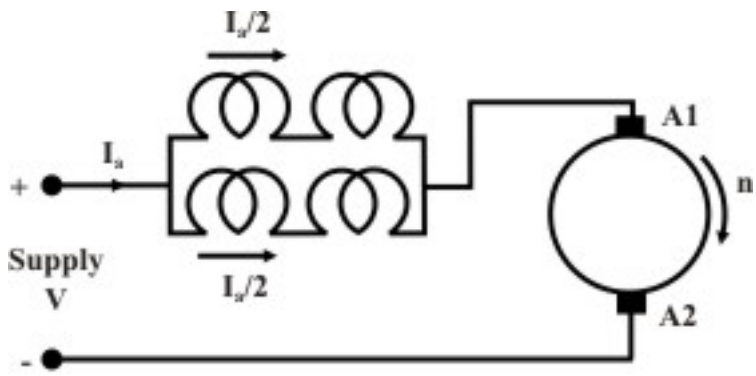

Figure 39.22: Series-parallel connection of coils.

In a similar way, reader can work out the variation of speed possible between (i) all coils connected in series and (ii) all coils connected in parallel.

39.8 Braking of d.c shunt motor: basic idea

It is often necessary in many applications to stop a running motor rather quickly. We know that any moving or rotating object acquires kinetic energy. Therefore, how fast we can bring the object to rest will depend essentially upon how quickly we can extract its kinetic energy and make arrangement to dissipate that energy somewhere else. If you stop pedaling your bicycle, it will eventually come to a stop eventually after moving quite some distance. The initial kinetic energy stored, in this case dissipates as heat in the friction of the road. However, to make the stopping faster, brake is applied with the help of rubber brake shoes on the rim of the wheels. Thus stored K.E now gets two ways of getting dissipated, one at the wheel-brake shoe interface (where most of the energy is dissipated) and the other at the road-tier interface. This is a good method no doubt, but regular maintenance of brake shoes due to wear and tear is necessary.

If a motor is simply disconnected from supply it will eventually come to stop no doubt, but will take longer time particularly for large motors having high rotational inertia. Because here the stored energy has to dissipate mainly through bearing friction and wind friction. The situation can be improved, by forcing the motor to operate as a generator during braking. The idea can be understood remembering that in motor mode electromagnetic torque acts along the

direction of rotation while in generator the electromagnetic torque acts in the opposite direction of rotation. Thus by forcing the machine to operate as generator during the braking period, a torque opposite to the direction of rotation will be imposed on the shaft, thereby helping the machine to come to stop quickly. During braking action, the initial K.E stored in the rotor is either dissipated in an external resistance or fed back to the supply or both.

39.8.1 Rheostatic braking

Consider a d.c shunt motor operating from a d.c supply with the switch S connected to position 1 as shown in figure 39.23. S is a *single pole double throw switch* and can be connected either to position 1 or to position 2. One end of an external resistance R_b is connected to position 2 of the switch S as shown.

Let with S in position 1, motor runs at n rpm, drawing an armature current I_a and the back emf is $E_b = k\phi\, n$. Note the polarity of E_b which, as usual for motor mode in opposition with the supply voltage. Also note T_e and n have same clock wise direction.

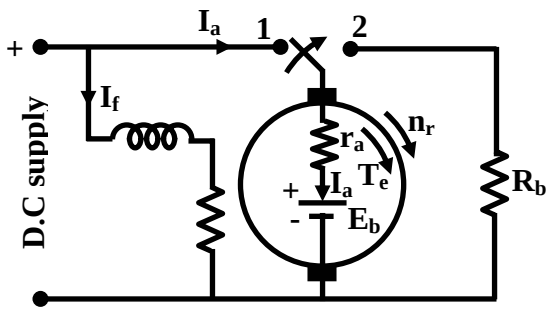

Figure 39.23: Machine operates as motor

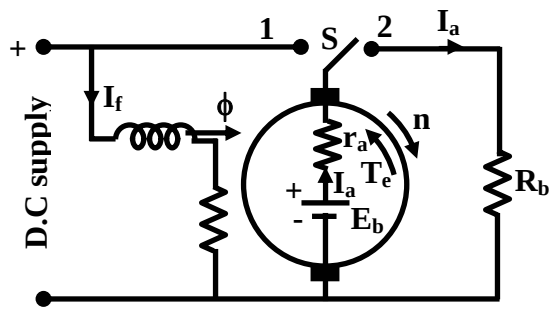

Figure 39.24: Machine operates as generator during braking

Now if S is suddenly thrown to position 2 at $t = 0$, the armature gets disconnected from the supply and terminated by R_b with field coil remains energized from the supply. Since speed of the rotor can not change instantaneously, the back emf value E_b is still maintained with same polarity prevailing at $t = 0_-$. Thus at $t = 0_+$, armature current will be $I_a = E_b/(r_a + R_b)$ and with reversed direction compared to direction prevailing during motor mode at $t = 0_-$.

Obviously for $t > 0$, the machine is operating as generator dissipating power to R_b and now the electromagnetic torque T_e must act in the opposite direction to that of n since I_a has changed direction but ϕ has not (recall $T_e \propto \phi\, I_a$). As time passes after switching, n decreases reducing K.E and as a consequence both E_b and I_a decrease. In other words value of braking torque will be highest at $t = 0_+$, and it decreases progressively and becoming zero when the machine finally come to a stop.

39.8.2 Plugging or dynamic braking

This method of braking can be understood by referring to figures 39.25 and 39.26. Here S is a double pole double throw switch. For usual motoring mode, S is connected to positions 1 and 1'. Across terminals 2 and 2', a series combination of an external resistance R_b and supply voltage with polarity as indicated is connected. However, during motor mode this part of the circuit remains inactive.

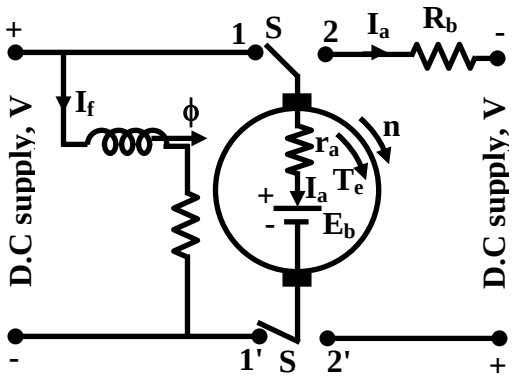

Figure 39.25: Machine operates as motor

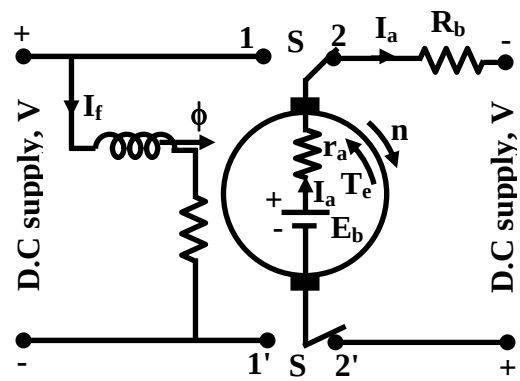

Figure 39.26: Machine operates as generator during braking (plugging).

To initiate braking, the switch is thrown to position 2 and 2' at t = 0, thereby disconnecting the armature from the left hand supply. Here at $t = 0_+$, the armature current will be $I_a = (E_b + V)/(r_a + R_b)$ as E_b and the right hand supply voltage have additive polarities by virtue of the connection. Here also I_a reverses direction producing T_e in opposite direction to n. I_a decreases as E_b decreases with time as speed decreases. However, I_a can not become zero at any time due to presence of supply V. So unlike rheostatic braking, substantial magnitude of braking torque prevails. Hence stopping of the motor is expected to be much faster then rheostatic breaking. But what happens, if S continuous to be in position 1' and 2' even after zero speed has been attained? The answer is rather simple, the machine will start picking up speed in the reverse direction operating as a motor. So care should be taken to disconnect the right hand supply, the moment armature speed becomes zero.

39.8.3 Regenerative braking

A machine operating as motor may go into regenerative braking mode if its speed becomes sufficiently high so as to make back emf greater than the supply voltage i.e., $E_b > V$. Obviously under this condition the direction of I_a will reverse imposing torque which is opposite to the direction of rotation. The situation is explained in figures 39.27 and 39.28. The normal motor operation is shown in figure 39.27 where armature motoring current I_a is drawn from the supply and as usual $E_b < V$. Since $E_b = k\phi\, n_1$. The question is how speed on its own become large enough to make $E_b < V$ causing regenerative braking. Such a situation may occur in practice when the mechanical load itself becomes active. Imagine the d.c motor is coupled to the wheel of locomotive which is moving along a plain track without any gradient as shown in figure 39.27. Machine is running as a motor at a speed of n_1 rpm. However, when the track has a downward gradient (shown in figure 39.28), component of gravitational force along the track also appears which will try to accelerate the motor and may increase its speed to n_2 such that $E_b = k\phi\, n_2 > V$. In such a scenario, direction of I_a reverses, feeding power back to supply. Regenerative braking here will not stop the motor but will help to arrest rise of dangerously high speed.

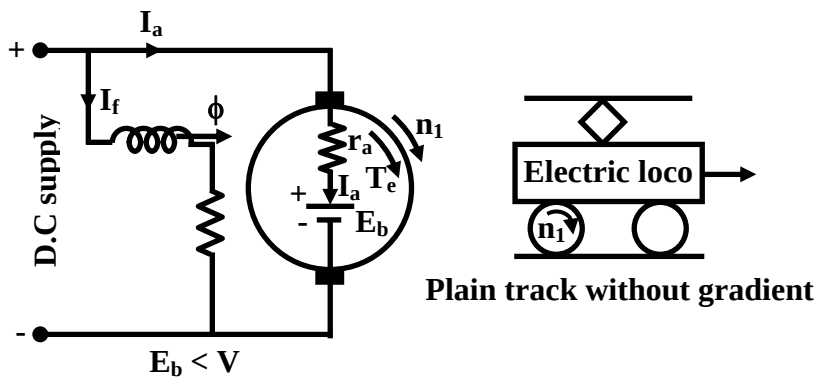

Figure 39.27: Machine operates as motor

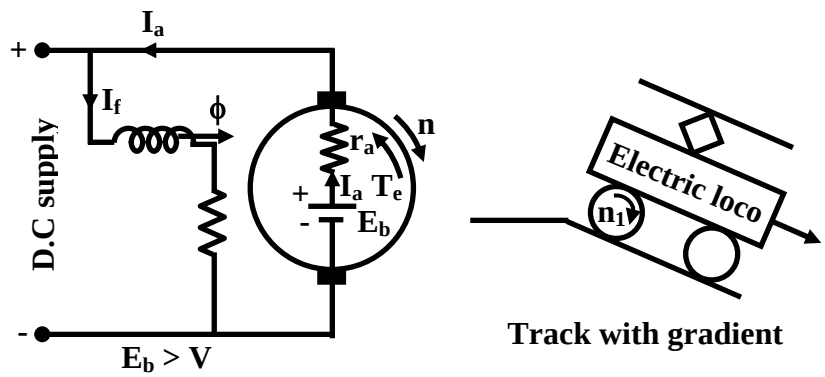

Figure 39.28: Machine enters regenerative braking mode.

39.9 Tick the correct answer

1. A 200 V, 1000 rpm, d.c shunt motor has an armature resistance of 0.8 Ω and its rated armature current is 20 A. Ratio of armature starting current to rated current with full voltage starting will be:

   (A) 1 V (B) 12.5 V (C) 25 V (D) 16 V

2. A 200 V, 1000 rpm, d.c shunt motor has an armature resistance of 0.8 Ω and found to run from a 200 V supply steadily at 950 rpm with a back emf of 190 V. The armature current is:

   (A) 237.5 A (B) 10 A (C) 250 A (D) 12.5 A

3. A d.c 220 V, shunt motor has an armature resistance of 1 Ω and a field circuit resistance of 150 Ω. While running steadily from 220 V supply, its back emf is found to be 209 V. The motor is drawing a line current of:

   (A) 11 A (B) 12.47 A (C) 221.47 A (D) 9.53 A

4. A 220 V, d.c shunt motor has r_a = 0.8 Ω and draws an armature current of 20 A while supplying a constant load torque. If flux is suddenly reduced by 10%, then immediately the armature current will become:

(A) 45.5 A and the new steady state armature current will be 22.2 A.
(B) 20 A and the new steady state armature current will be 22.2 A.
(C) 22.2 A and the new steady state armature current will be 45.5 A.
(D) 20 A and the new steady state armature current will be 25 A.

5. A 220 V, d.c shunt motor has $r_a = 0.8\ \Omega$ and draws an armature current of 20 A while supplying a constant load torque. If a 4.2 Ω resistance is inserted in the armature circuit suddenly, then immediately the armature current will become:

   (A) 20 A and the new steady state armature current will be 3.2 A.
   (B) 3.2 A and the new steady state armature current will be 20 A.
   (C) 47.2 A and the new steady state armature current will be 3.2 A.
   (D) 3.2 A and the new steady state armature current will be 47.2 A.

6. A separately excited 220 V, d.c generator has $r_a = 0.6\ \Omega$ and while supplying a constant load torque, draws an armature current of 30 A at rated voltage. If armature supply voltage is reduced by 20%, the new steady state armature current will be:

   (A) 24 A (B) 6 A (C) 30 A (D) 36 A

7. A 250 V, d.c shunt motor having negligible armature resistance runs at 1000 rpm at rated voltage. If the supply voltage is reduced by 25%, new steady state speed of the motor will be about:

   (A) 750 rpm (B) 250 rpm (C) 1000 rpm (D) 1250 rpm

39.10 Solve the following

1. A d.c motor takes an armature current of 50A at 220V. The resistance of the armature is 0.2Ω. The motor has 6 poles and the armature is lap wound with 430 conductors. The flux per pole is 0.03Wb. Calculate the speed at which the motor is running and the electromagnetic torque developed.

2. A 10KW, 250V, 1200 rpm d.c shunt motor has a full load efficiency of 80%, $r_a = 0.2\Omega$ and $R_f = 125\Omega$. The machine is initially operating at full load condition developing full load torque.

   i. What extra resistance should be inserted is the armature circuit if the motor speed is to be reduced to 960 rpm?
   ii. What additional resistance is to be inserted in the field circuit in order to raise the speed to 1300 rpm?

Note that for both parts (i) and (ii) the initial condition is the same full load condition as stated in the *first paragraph* and load torque remains constant throughout. Effect of saturation and armature reaction may be neglected.

Module 9

DC Machines

Lesson 40

Losses, Efficiency and Testing of D.C. Machines

Version 2 EE IIT, Kharagpur

Contents

40 Losses, efficiency and testing of D.C. machines (Lesson-40) 4

40.1 Goals of the lesson …….. 4

40.2 Introduction……. 4

40.3 Major losses…….…… 4

40.4 Swinburne's Test ……..…….. 6

40.5 *Hopkinson's* test …….…… 8

40.5.1 Procedure …….…….. 9

40.5.2 Loading the machines …… 10

40.5.3 Calculation of efficiency …… 10

40.6 Condition for maximum efficiency …… 11

40.6.1 Maximum efficiency for motor mode …… 11

40.6.2 Maximum efficiency for General mode ……. 12

40.7 Tick the correct answer……... 13

40.8 Solve the following …… 14

Chapter 40

Losses, efficiency and testing of D.C. machines (Lesson-40)

40.1 Goals of the lesson

1. To know what are the various power losses which take place in a d.c machine.
2. To understand the factors on which various losses depend upon.
3. To know how to calculate efficiency.
4. To know how to estimate and predict efficiency of a d.c shunt motor by doing simple tests.

40.2 Introduction

In the previous sections we have learnt about the principle of operation of d.c. generators and motors, (starting and speed control of d.c motor). Motors convert *electrical* power (input power) into *mechanical* power (output power) while generators convert *mechanical* power (input power) into *electrical* power (output power). Whole of the input power can not be converted into the output power in a practical machine due to various losses that take place within the machine. Efficiency η being the ratio of output power to input power, is always less than 1 (or 100 %). Designer of course will try to make η as large as possible. Order of efficiency of rotating d.c machine is about 80 % to 85 %. It is therefore important to identify the losses which make efficiency poor.

In this lesson we shall first identify the losses and then try to estimate them to get an idea of efficiency of a given d.c machine.

40.3 Major losses

Take the case of a loaded d.c motor. There will be copper losses $\left(I_a^2 r_a \text{ and } I_f^2 R_f = VI_f\right)$ in armature and field circuit. The armature copper loss is variable and depends upon degree of loading of the machine. For a shunt machine, the field copper loss will be constant if field resistance is not varied. Recall that rotor body is made of iron with slots in which armature conductors are placed. Therefore when armature rotates in presence of field produced by stator field coil, eddy current and hysteresis losses are bound to occur on the rotor body made of iron. The sum of eddy current and hysteresis losses is called the *core* loss or *iron* loss. To reduce *core* loss, circular varnished and slotted laminations or *stamping* are used to fabricate the armature. The value of the core loss will depend on the strength of the field and the armature speed. Apart from these there will be power loss due to *friction* occurring at the bearing & shaft and air friction (windage loss) due to rotation of the armature. To summarise following major losses occur in a d.c machine.

1. Field copper loss: It is power loss in the field circuit and equal to $I_f^2 R_f = VI_f$. During the course of loading if field circuit resistance is not varied, field copper loss remains constant.
2. Armature copper loss: It is power loss in the armature circuit and equal to $I_a^2 R_a$. Since the value of armature current is decided by the load, armature copper loss becomes a function of time.
3. Core loss: It is the sum of eddy current and hysteresis loss and occurs mainly in the rotor iron parts of armature. With constant field current and if speed does not vary much with loading, core loss may be assumed to be constant.
4. Mechanical loss: It is the sum of bearing friction loss and the windage loss (friction loss due to armature rotation in air). For practically constant speed operation, this loss too, may be assumed to be constant.

Apart from the major losses as enumerated above there may be a small amount loss called *stray* loss occur in a machine. Stray losses are difficult to account. Power flow diagram of a d.c motor is shown in figure 40.1. A portion of the input power is consumed by the field circuit as field copper loss. The remaining power is the power which goes to the armature; a portion of which is lost as core loss in the armature core and armature copper loss. Remaining power is the gross mechanical power developed of which a portion will be lost as friction and remaining power will be the net mechanical power developed. Obviously efficiency of the motor will be given by:

$$\eta = \frac{P_{\text{net mech}}}{P_{\text{in}}}$$

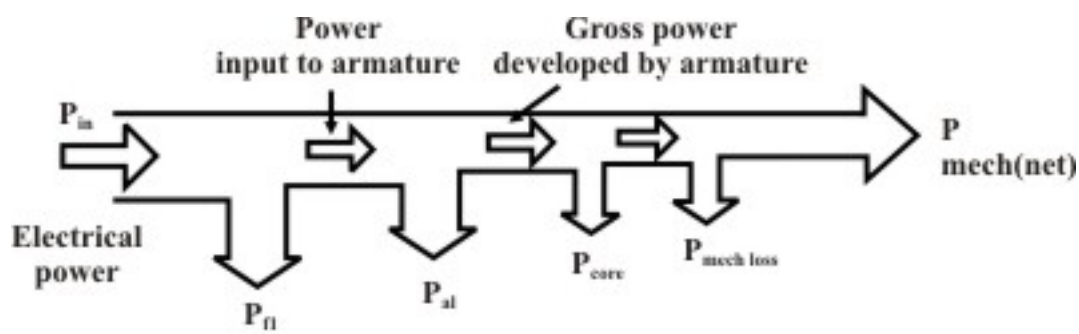

Fig. 40.1: Power flow diagram of a D.C. motor

Similar power flow diagram of a d.c generator can be drawn to show various losses and input, output power (figure 40.2).

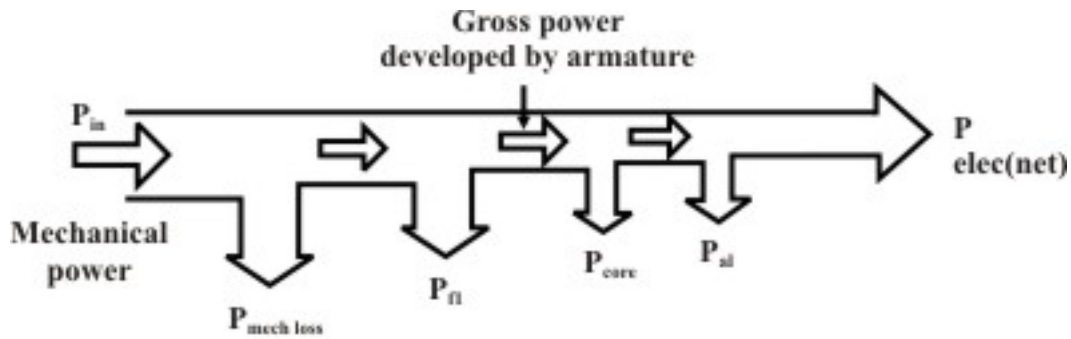

Fig. 40.2: Power flow diagram of a D.C. generator

It is important to note that the name plate kW (or hp) rating of a d.c machine always corresponds to the net **output** at rated condition for both generator and motor.

40.4 Swinburne's Test

For a d.c shunt motor change of speed from no load to full load is quite small. Therefore, mechanical loss can be assumed to remain same from no load to full load. Also if field current is held constant during loading, the core loss too can be assumed to remain same.

In this test, the motor is run at rated speed under *no load* condition at rated voltage. The current drawn from the supply I_{L0} and the field current I_f are recorded (figure 40.3). Now we note that:

$$
\begin{aligned}
\text{Input power to the motor, } P_{in} &= VI_{L0} \\
\text{Cu loss in the field circuit } P_{fl} &= VI_f \\
\text{Power input to the armature,} &= VI_{L0} - VI_f \\
&= V(I_{L0} - I_f) \\
&= VI_{a0} \\
\text{Cu loss in the armature circuit} &= I_{a0}^2 r_a \\
\text{Gross power developed by armature} &= VI_{a0} - I_{a0}^2 r_a \\
&= \left(V - I_{a0} r_a\right) I_{a0} \\
&= E_{b0} I_{a0}
\end{aligned}
$$

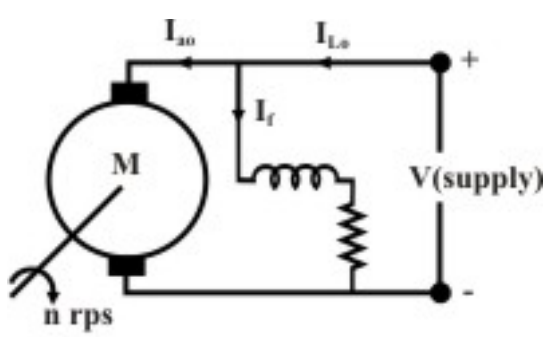

Fig. 40.3: Motor under no load

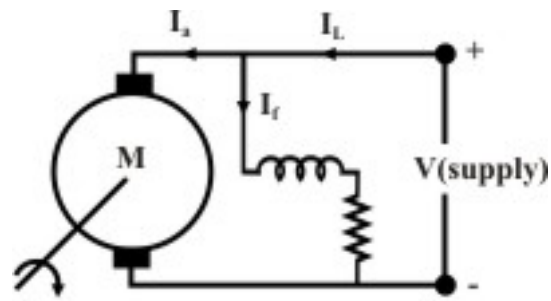

Fig. 40.4: Motor Loaded

Since the motor is operating under no load condition, net mechanical output power is zero. Hence the gross power developed by the armature must supply the core loss and friction & windage losses of the motor. Therefore,

$$P_{core} + P_{friction} = \left(V - I_{a0} r_a\right) I_{a0} = E_{b0} I_{a0}$$

Since, both P_{core} and $P_{friction}$ for a shunt motor remains practically constant from no load to full load, the sum of these losses is called constant rotational loss i.e.,

constant rotational loss, $P_{rot} = P_{core} + P_{friction}$

In the Swinburne's test, the constant rotational loss comprising of core and friction loss is estimated from the above equation.

After knowing the value of P_{rot} from the Swinburne's test, we can fairly estimate the efficiency of the motor at any loading condition. Let the motor be loaded such that new current drawn from the supply is I_L and the new armature current is I_a as shown in figure 40.4. To estimate the efficiency of the loaded motor we proceed as follows:

$$\begin{aligned}
\text{Input power to the motor, } P_{in} &= VI_L \\
\text{Cu loss in the field circuit } P_{fl} &= VI_f \\
\text{Power input to the armature,} &= VI_L - VI_f \\
&= V(I_L - I_f) \\
&= VI_a \\
\text{Cu loss in the armature circuit} &= I_a^2 r_a \\
\text{Gross power developed by armature} &= VI_a - I_a^2 r_a \\
&= \left(V - I_a r_a\right) I_a \\
&= E_b I_a \\
\text{Net mechanical output power, } P_{net\ mech} &= E_b I_a - P_{rot} \\
\therefore \text{ efficiency of the loaded motor, } \eta &= \frac{E_b I_a - P_{rot}}{VI_L} \\
&= \frac{P_{net\ mech}}{P_{in}}
\end{aligned}$$

The estimated value of P_{rot} obtained from Swinburne's test can also be used to estimate the efficiency of the shunt machine operating as a generator. In figure 40.5 is shown to deliver a

load current I_L to a load resistor R_L. In this case output power being known, it is easier to add the losses to estimate the input mechanical power.

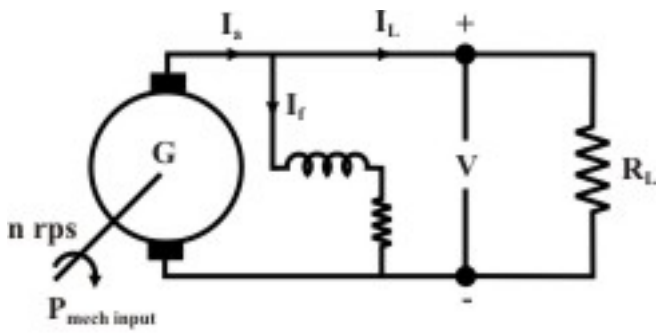

Fig. 40.5: Loaded d.c. generator

$$
\begin{aligned}
\text{Output power of the generator, } P_{out} &= VI_L \\
\text{Cu loss in the field circuit } P_{fl} &= VI_f \\
\text{Output power of the armature,} &= VI_L + VI_f \\
&= VI_a \\
\text{Mechanical input power, } P_{in\ mech} &= VI_a + I_a^2 r_a + P_{rot} \\
\therefore \text{ Efficiency of the generator, } \eta &= \frac{VI_L}{P_{in\ mech}} \\
&= \frac{VI_L}{VI_a + I_a^2 r_a + P_{rot}}
\end{aligned}
$$

The biggest advantage of Swinburne's test is that the shunt machine is to be run as motor under *no load* condition requiring little power to be drawn from the supply; based on the no load reading, efficiency can be predicted for any load current. However, this test is not sufficient if we want to know more about its performance (effect of armature reaction, temperature rise, commutation etc.) when it is actually loaded. Obviously the solution is to load the machine by connecting mechanical load directly on the shaft for motor or by connecting loading rheostat across the terminals for generator operation. This although sounds simple but difficult to implement in the laboratory for high rating machines (say above 20 kW), Thus the laboratory must have proper supply to deliver such a large power corresponding to the rating of the machine. Secondly, one should have loads to absorb this power.

40.5 *Hopkinson's test*

This as an elegant method of testing d.c machines. Here it will be shown that while power drawn from the supply only corresponds to no load losses of the machines, the armature physically carries any amount of current (which can be controlled with ease). Such a scenario can be created using two similar mechanically coupled shunt machines. Electrically these two machines are eventually connected in parallel and controlled in such a way that one machine acts as a generator and the other as motor. In other words two similar machines are required to carry out this testing which is not a bad proposition for manufacturer as large numbers of similar machines are manufactured.

40.5.1 Procedure

Connect the two similar (same rating) coupled machines as shown in figure 40.6. With switch S opened, the first machine is run as a shunt motor at rated speed. It may be noted that the second machine is operating as a separately excited generator because its field winding is excited and it is driven by the first machine. Now the question is what will be the reading of the voltmeter connected across the opened switch S? The reading may be (i) either close to twice supply voltage or (ii) small voltage. In fact the voltmeter practically reads the difference of the induced voltages in the armature of the machines. The upper armature terminal of the generator may have either + ve or negative polarity. If it happens to be +ve, then voltmeter reading will be small otherwise it will be almost double the supply voltage.

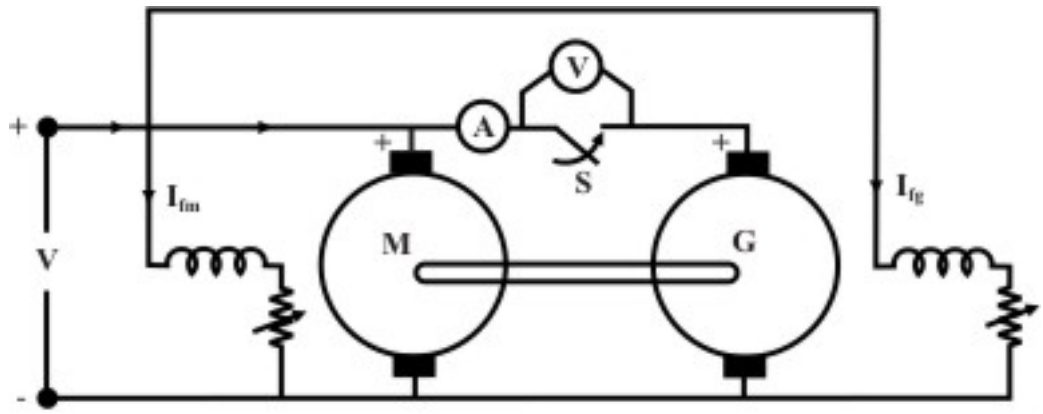

Fig. 40.6: Hopkinson's test: machines before paralleling

Since the goal is to connect the two machines in parallel, we must first ensure voltmeter reading is small. In case we find voltmeter reading is high, we should switch off the supply, reverse the armature connection of the generator and start afresh. Now voltmeter is found to read small although time is still not ripe enough to close S for paralleling the machines. Any attempt to close the switch may result into large circulating current as the armature resistances are small. Now by adjusting the field current I_{fg} of the generator the voltmeter reading may be adjusted to zero ($E_g \approx E_b$) and S is now closed. Both the machines are now connected in parallel as shown in figure 40.7.

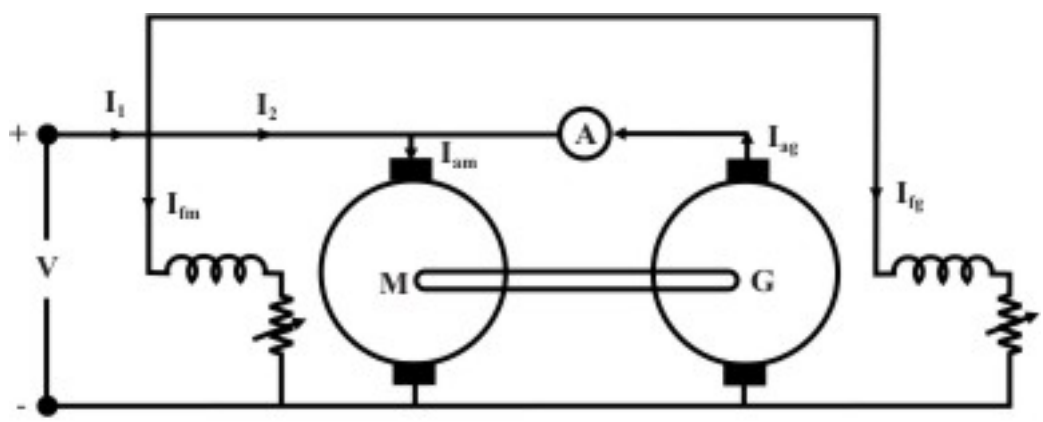

Fig. 40.7: Hopkinson's test: machines paralled

40.5.2 Loading the machines

After the machines are successfully connected in parallel, we go for loading the machines i.e., increasing the armature currents. Just after paralleling the ammeter reading A will be close to zero as $E_g \approx E_b$. Now if I_{fg} is increased (by decreasing R_{fg}), then E_g becomes greater than E_b and both I_{ag} and I_{am} increase, Thus by increasing field current of generator (alternatively decreasing field current of motor) one can make $E_g > E_b$ so as to make the second machine act as generator and first machine as motor. In practice, it is also required to control the field current of the motor I_{fm} to maintain speed constant at rated value. The interesting point to be noted here is that I_{ag} and I_{am} do not reflect in the supply side line. Thus current drawn from supply remains small (corresponding to losses of both the machines). The loading is sustained by the output power of the generator running the motor and vice versa. The machines can be loaded to full load current without the need of any loading arrangement.

40.5.3 Calculation of efficiency

Let field currents of the machines be are so adjusted that the second machine is acting as generator with armature current I_{ag} and the first machine is acting as motor with armature current I_{am} as shown in figure 40.7. Also let us assume the current drawn from the supply be I_1. Total power drawn from supply is VI_1 which goes to supply all the losses (namely Cu losses in armature & field and rotational losses) of both the machines,
Now:

$$\begin{aligned}
\text{Power drawn from supply} &= VI_1 \\
\text{Field Cu loss for motor} &= VI_{fm} \\
\text{Field Cu loss for generator} &= VI_{fg} \\
\text{Armature Cu loss for motor} &= I_{am}^2 r_{am} \\
\text{Armature Cu loss for generator} &= I_{ag}^2 r_{ag} \\
\therefore \text{Rotational losses of both the machines} &= VI_1 - \left(VI_{fm} + VI_{fg} + I_{am}^2 r_{am} + I_{ag}^2 r_{ag}\right)
\end{aligned} \tag{40.1}$$

Since speed of both the machines are same, it is reasonable to assume the rotational losses of both the machines are equal; which is strictly not correct as the field current of the generator will be a bit more than the field current of the motor, Thus,

$$\text{Rotational loss of each machine, } P_{rot} = \frac{VI_1 - \left(VI_{fm} + VI_{fg} + I_{am}^2 r_{am} + I_{ag}^2 r_{ag}\right)}{2}$$

Once P_{rot} is estimated for each machine we can proceed to calculate the efficiency of the machines as follows,

Efficiency of the motor

As pointed out earlier, for efficiency calculation of motor, first calculate the input power and then subtract the losses to get the output mechanical power as shown below,

$$\text{Total power input to the motor} = \text{power input to its field} + \text{power input to its armature}$$

$$P_{inm} = VI_{fm} + VI_{am}$$

$$\text{Losses of the motor} = VI_{fm} + I_{am}^2 r_{am} + P_{rot}$$

$$\text{Net mechanical output power } P_{outm} = P_{inm} - \left(VI_{fm} + I_{am}^2 r_{am} + P_{rot}\right)$$

$$\therefore \eta_m = \frac{P_{outm}}{P_{inm}}$$

Efficiency of the generator

For generator start with output power of the generator and then add the losses to get the input mechanical power and hence efficiency as shown below,

Output power of the generator, $P_{outg} = VI_{ag}$

$$\text{Losses of the generator} = VI_{fg} + I_{ag}^2 r_{ag} + P_{rot}$$

$$\text{Input power to the generator, } P_{ing} = P_{outg} + \left(VI_{fg} + I_{ag}^2 r_{ag} + P_{rot}\right)$$

$$\therefore \eta_g = \frac{P_{outg}}{P_{ing}}$$

40.6 Condition for maximum efficiency

We have seen that in a transformer, maximum efficiency occurs when copper loss = core loss, where, copper loss is the variable loss and is a function of loading while the core loss is practically constant independent of degree of loading. This condition can be stated in a different way: maximum efficiency occurs when the variable loss is equal to the constant loss of the transformer.

Here we shall see that similar condition also exists for obtaining maximum efficiency in a d.c shunt machine as well.

40.6.1 Maximum efficiency for motor mode

Let us consider a loaded shunt motor as shown in figure 40.8. The various currents along with their directions are also shown in the figure.

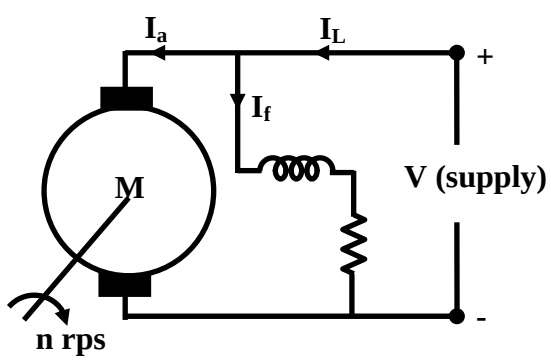

Figure 40.8: Machine operates as motor

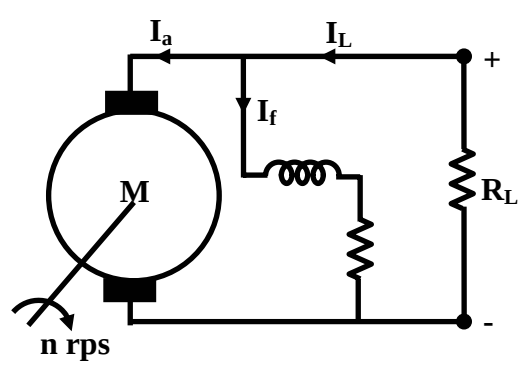

Figure 40.9: Machine operates as generator

We assume that field current I_f remains constant during change of loading. Let,

$$
\begin{aligned}
P_{rot} &= \text{constant rotational loss} \\
V I_f &= \text{constant field copper loss} \\
\text{Constant loss } P_{const} &= P_{rot} + V I_f \\
\text{Now, input power drawn from supply} &= V I_L \\
\text{Power loss in the armature,} &= I_a^2 r_a \\
\text{Net mechanical output power} &= VI_L - I_a^2 r_a - (VI_f + P_{rot}) \\
&= VI_L - I_a^2 r_a - P_{const} \\
\text{so, efficiency at this load current } \eta_m &= \frac{VI_L - I_a^2 r_a - P_{const}}{VI_L}
\end{aligned}
$$

Now the armature copper loss $I_a^2 r_a$ can be approximated to $I_L^2 r_a$ as $I_a \approx I_L$. This is because the order of field current may be 3 to 5% of the rated current. Except for very lightly loaded motor, this assumption is reasonably fair. Therefore replacing I_a by I_f in the above expression for efficiency η_m, we get,

$$
\begin{aligned}
\eta_m &= \frac{VI_L - I_L^2 r_a - P_{const}}{VI_L} \\
&= 1 - \frac{I_L r_a}{V} - \frac{P_{const}}{VI_L}
\end{aligned}
$$

Thus, we get a simplified expression for motor efficiency η_m in terms of the variable current (which depends on degree of loading) I_L, current drawn from the supply. So to find out the condition for maximum efficiency, we have to differentiate η_m with respect to I_L and set it to zero as shown below.

$$
\begin{aligned}
\frac{d\eta_m}{dI_L} &= 0 \\
\text{or, } \frac{d}{dI_L}\left(\frac{I_L r_a}{V} - \frac{P_{const}}{VI_L}\right) &= 0 \\
\text{or, } -\frac{r_a}{V} + \frac{P_{const}}{VI_L^2} & \\
\therefore \text{Condition for maximum efficiency is } I_L^2 r_a \approx I_a^2 r_a &= P_{const} \\
\text{So, the armature current at which efficiency becomes maximum is } I_a &= \sqrt{P_{const}/r_a}
\end{aligned}
$$

40.6.2 Maximum efficiency for Generation mode

Similar derivation is given below for finding the condition for maximum efficiency in generator mode by referring to figure 40.9.

We assume that field current I_f remains constant during change of loading. Let,

$$
\begin{aligned}
P_{rot} &= \text{constant rotational loss} \\
V I_f &= \text{constant field copper loss} \\
\text{Constant loss } P_{const} &= P_{rot} + V I_f \\
\text{Net output power to load} &= V I_L \\
\text{Power loss in the armature,} &= I_a^2 r_a \\
\text{Mechanical input power} &= VI_L + I_a^2 r_a + (VI_f + P_{rot}) \\
&= VI_L + I_a^2 r_a + P_{const} \\
\text{so, efficiency at this load current } \eta_g &= \frac{VI_L}{VI_L + I_a^2 r_a + P_{const}}
\end{aligned}
$$

As we did in case of motor, the armature copper loss $I_a^2 r_a$ can be approximated to $I_L^2 r_a$ as $I_a \approx I_L$. So expression for η_g becomes,

$$
\eta_g = \frac{VI_L}{VI_L + I_L^2 r_a + P_{const}}
$$

Thus, we get a simplified expression for motor efficiency η_g in terms of the variable current (which depends on degree of loading) I_L, current delivered to the load. So to find out the condition for maximum efficiency, we have to differentiate η_g with respect to I_L and set it to zero as shown below.

$$
\begin{aligned}
\frac{d\eta_g}{dI_L} &= 0 \\
\text{or, } \frac{d}{dI_L}\left(\frac{VI_L}{VI_L + I_L^2 r_a + P_{const}}\right) &= 0 \\
\therefore \text{Simplifying we get the condition as } I_L^2 r_a \approx I_a^2 r_a &= P_{const} \\
\text{So, the armature current at which efficiency becomes maximum is } I_a &= \sqrt{P_{const}/r_a}
\end{aligned}
$$

Thus maximum efficiency both for motoring and generating are same in case of shunt machines. To state we can say at that armature current maximum efficiency will occur which will make variable loss = constant loss. Eventually this leads to the expression for armature current for maximum efficiency as $I_a = \sqrt{P_{const}/r_a}$.

40.7 Tick the correct answer

1. A 5 kW, 230 V, d.c shunt motor is operating at rated condition with 82% efficiency. Power drawn form the supply and the total loss are respectively

   (A) 5 kW and 900 W (B) 6.1 kW and 1100 W
   (C) 6.1 kW and 900 W (D) 5 kW and 1100 W

2. 10 kW, 230 V, d.c shunt generator is operating at rated condition with 80% efficiency. Input power and the total loss are respectively

(A) 5 kW and 2.5 kW (B) 12.5 kW and 1 kW
(C) 12.5 kW and 2.5 kW (D) 5 kW and 1 kW

3. A 10 kW, 220 V, d.c shunt motor is drawing 53.78 A from supply mains at rated condition. The machine has r_a = 0.3 Ω and R_f = 220 Ω. The core and friction loss together is

   (A) 220 W (B) 1831.6 W (C) 867.7 W (D) 743.9 W

4. A 10 kW, 220 V, d.c shunt generator is supplying a load at rated condition. Input mechanical power is found to be 12.5 kW. The machine has r_a = 0.3 Ω and R_f = 220 Ω. The core and friction loss together is

   (A) 1660.3 W (B) 619.7 W (C) 839.7 W (D) 2500 W

5. During no load test on a 220 V, shunt motor having r_a = 0.7 Ω and R_f = 220 Ω, the armature current is recorded to be 4 A. The rotational loss of the motor is

   (A) 880 W (B) 11.2 W (C) 1088.8 W (D) 868.8 W

6. A d.c shunt motor with r_a = 0.8 Ω, has 200 W field circuit loss and 250 W rotational loss. Motor will operate maximum efficiency when loaded to carry an armature current of about

   (A) 17.68 A (B) 23.72 A (C) 15.81 A (D) 53.76 A

40.8 Solve the following

1. A 220 V d.c shunt motor has armature and field resistance as 0.8 Ω and 200 Ω. During Swinburne's test, current drawn from the supply is found to be 2.5 A. Estimate the efficiency of the machine,

   (i) When it is running as a motor drawing a line current of 40 A from the 220 V supply.
   (ii) When it is running as a generator delivering a load current of 40 A at 220 V.

2. Two similar coupled machines of same rating, each having an armature resistance of 0.5 Ω are connected for Hopkinson's test. Test data recorded as follows:

   Supply voltage = 230 Volts
   Total line current drawn from the supply = 8 A
   Field current of the machine running as generator = 3 A
   Field current of the machine running as motor = 2 A
   Generator armature current = 17 A

   (i) Estimate the rotational loss of each machine.
   (ii) Estimate the efficiency of the generator.
   (iii) Estimate the efficiency of the motor.

Module 9

DC Machines

Version 2 EE IIT, Kharagpur

Lesson 41

Problem Solving on D.C Machines

Contents

41 Problem solving on D.C machines (Lesson-41) 4

41.1 Introduction 4

41.2 Shunt motor problems 4

41.3 Problems on Series Motor ……. 8

41.4 D.C generator problems 12

41.5 Operation of d.c machine connected to d.c bus (fixed d.c voltage)……... 13

Introduction

In this lecture some typical problems on D.C machines are worked out not only to solve the problems only but also to bring out important features of the motors involving its performance. To begin with few problems on d.c motors have been solved and then problems on generator are taken up.

For a beginner, it is suggested to follow the following guidelines for successful completion of the problem.

1. Read the problem and note down the informations provided about the motor.
2. In general, some initial steady operating conditions are given in terms of armature current, field current, speed etc.
3. Draw a circuit diagram showing the initial variable values.
4. Write down the *back emf* equation and the *torque* equation for the initial operating point, it is reiterated here that these two equations hold the key for the gateway of correct solution.
5. In the statement of the problem, with respect to the initial operating point, some variable (like, armature resistance, field resistance, load torque, armature applied voltage etc.) will be changed and you will be asked perhaps to calculate new armature current, speed etc.
6. Assume the variables to be calculated and write down once again the *back emf* equation and the *torque* equation for the new operating point.
7. You have now four equations – 2 corresponding to initial operating point and the other 2 corresponding to the new operating point.
8. Take the ratio of the torque equations and the ratio of back emf equations.
9. Solve from the above equations the unknown.

Let us now solve some problems on shunt, separately excited and series motors.

41.2 Shunt motor problems

1. A 220 V shunt motor has armature and field resistance of 0.2 Ω and 220 Ω respectively. The motor is driving a constant load torque and running at 1000 rpm drawing 10 A current from the supply. Calculate the new speed and armature current if an external armature resistance of value 5 Ω is inserted in the armature circuit. Neglect armature reaction and saturation.

Solution

The circuit diagram of the shunt motor is:

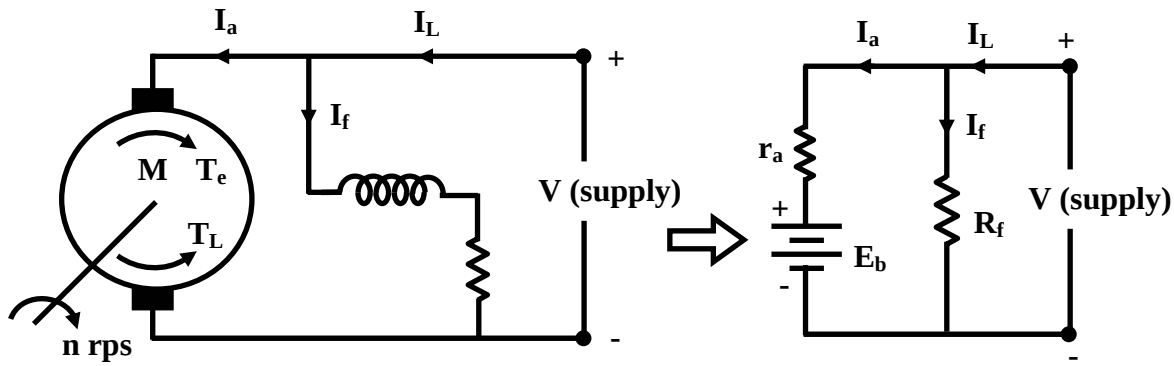

Figure 41.1: D.C shunt motor.

For initial operating point: I_{L1} = 10 A, r_a = 0.2 Ω and supply voltage V = 220 V.

$$\text{Field current } I_{f1} = 220/220 \text{ A} = 1\text{A}$$
$$\text{Armature current } I_{a1} = 10\text{A} - 1\text{A} = 9\text{A}$$

Now we write down the expressions for the torque and back emf.

$$T_{e1} = k_t I_{f1} I_{a1} = k_t \times 1 \times 9 = T_L$$
$$E_{b1} = k_g I_{f1} n = k_g \times 1 \times 1000 = V - I_{a1} r_a = 220 - 9 \times 0.2 = 218.2\text{V}$$
$$k_g \times 1 \times 1000 = 218.2\text{V}$$

Since field resistance remains unchanged $I_{f2} = I_{f1}$ = 1 A. Let the new steady armature current be I_{a2} and the new speed be n_2. In this new condition the torque and back emf equations are

$$T_{e2} = k_t \times 1 \times I_{a2} = T_L$$
$$E_{b2} = k_g \times 1 \times n_2 = V - I_{a2}(r_a + R_{ext})$$
$$\therefore k_g \times 1 \times n_2 = 220 - I_{a2} \times 5.2 \text{ V}$$

Taking the ratios of T_{e2} and T_{e1} we get,

$$\frac{T_{e2}}{T_{e1}} = \frac{k_t \times 1 \times I_{a2}}{k_t \times 1 \times 9}$$
$$\text{Thus, } I_{a2} = 9 \text{ A}$$

Now taking the ratio emfs $\frac{E_{b2}}{E_{b1}}$, we get,

$$\frac{k_g \times 1 \times n_2}{k_g \times 1 \times 1000} = \frac{220 - I_{a2} \times 5.2}{218}$$

$$\frac{n_2}{1000} = \frac{220-9\times 5.2}{218.2}$$

$$\text{or, } \frac{n_2}{1000} = \frac{173.2}{218.2}$$

$$\text{or, } n_2 = \frac{173.2\times 1000}{218.2}$$

$$\therefore n_2 = 793.76 \text{ rpm}$$

It may be noted that, for constant load torque the steady state armature current does not change with change in the value of the armature resistance.

Let us consider the next problem whose data are similar to the first problem except the fact that load torque is a function of speed.

2. A 220 V shunt motor has armature and field resistances of 0.2 Ω and 220 Ω respectively. The motor is driving load torque, $T_L \propto n^2$ and running at 1000 rpm drawing 10 A current from the supply. Calculate the new speed and armature current if an external armature resistance of value 5 Ω is inserted in the armature circuit. Neglect armature reaction and saturation.

Solution

The field current and armature currents corresponding to the initial operating point are

$$I_{f1} = 1 \text{ A and } I_{a1} = 9 \text{ A}$$

Now torque and back emf equations are:

$$T_{e1} = k_t \times 1\times 9 = T_{L1}$$

$$E_{b1} = k_g \times 1\times 1000 = V - I_{a1}r_a = 220 - 9\times 0.2 = 218.2\text{V}$$

$$k_g \times 1\times 1000 = 218.2\text{V}$$

Let the new steady state armature current be I_{a2} and the new speed be n_2. In this new condition the torque and back emf equations are

$$T_{e2} = k_t \times 1\times I_{a2} = T_{L2}$$

$$E_{b2} = k_g \times 1\times n_2$$

$$= V - I_{a2}(r_a + R_{ext})$$

$$\therefore k_g \times 1\times n_2 = 220 - I_{a2}\times 5.2 \text{ V}$$

Taking the ratios of T_{e2} and T_{e1} we get,

$$\frac{T_{e2}}{T_{e1}} = \frac{T_{L2}}{T_{L1}} = \frac{k_t \times 1\times I_{a2}}{k_t \times 1\times 9}$$

$$\frac{n_2^2}{1000^2} = \frac{I_{a2}}{9}$$

$$\frac{I_{a2}}{9} = \frac{n_2^2}{1000^2}$$

$$\text{or, } \frac{n_2}{1000} = \frac{\sqrt{I_{a2}}}{3}$$

Taking the ratios of E_{b2} and E_{b1} we get,

$$\frac{k_g \times 1 \times n_2}{k_g \times 1 \times 1000} = \frac{220 - I_{a2} \times 5.2}{218.2}$$

$$\frac{n_2}{1000} = \frac{220 - I_{a2} \times 5.2}{218.2}$$

$$\text{substitution gives: } \frac{\sqrt{I_{a2}}}{3} = \frac{220 - I_{a2} \times 5.2}{218.2}$$

simplification results into the following quadratic equation:

$$0.005 I_{a2}^2 - 1.43\, I_{a2} + 9.15 = 0$$

$$\text{Solving and neglecting the unrealistic value, } I_{a2} = 7 \text{ A}$$

$$\therefore n_2 = \frac{\sqrt{I_{a2}}}{3} \times 1000 \text{ rpm}$$

$$= \frac{\sqrt{7}}{3} \times 1000 \text{ rpm}$$

$$\text{thus, } n_2 = 881.9 \text{ rpm}$$

3. Initially a d.c shunt motor having $r_a = 0.5\ \Omega$ and $R_f = 220\ \Omega$ is running at 1000 rpm drawing 20 A from 220 V supply. If the field resistance is increased by 5%, calculate the new steady state armature current and speed of the motor. Assume the load torque to be constant.

Solution

As usual let us begin the solution by drawing the shunt motor diagram.

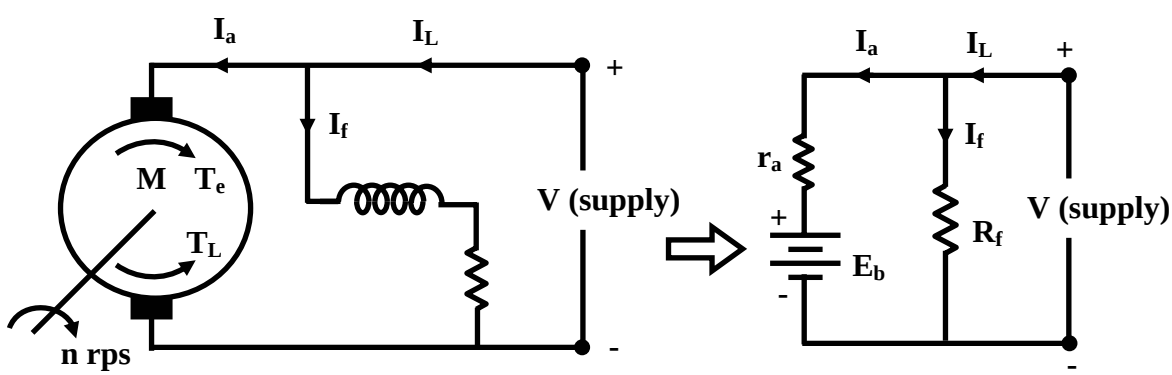

Figure 41.2: D.C shunt motor.

For initial operating point: $I_{L1} = 20$ A, $r_a = 0.5\ \Omega$ and supply voltage $V = 220$ V.

$$\begin{aligned} \text{Field current } I_{f1} &= 220/220 \text{ A} = 1 \text{ A} \\ \text{Armature current } I_{a1} &= 20 \text{ A} - 1 \text{ A} = 19 \text{ A} \end{aligned}$$

Now we write down the expressions for the torque and back emf corresponding to the initial condition.

$$\begin{aligned} T_{e1} = k_t I_{f1} I_{a2} &= k_t \times 1 \times 19 = T_{L1} \\ E_{b1} = k_g I_{f1} n_1 = k_g \times 1 \times 1000 = V - I_{a1} r_a &= 220 - 19 \times 0.5 = 210.5\text{V} \\ k_g \times 1 \times 1000 &= 210.5\text{V} \end{aligned}$$

In this problem the field Resistance is changed and new value of field resistance is $R_{f2} = 1.05 \times 220 = 231\ \Omega$. So new field current is $I_{f2} = \frac{220}{231} = 0.95$ A. Let the new steady state armature current be I_{a2} and the new speed be n_2. Since load torque remains constant, we have:

$$\begin{aligned} T_{e1} &= T_{e2} \\ k_t I_{f1} I_{a1} &= k_t I_{f2} I_{a2} \\ \text{or, } I_{f1} I_{a1} &= I_{f2} I_{a2} \\ \text{or, } 1 \times 19 &= 0.95\, I_{a2} \\ \text{or, } I_{a2} &= \frac{19}{0.95} \\ \text{or, } I_{a2} &= 20 \text{ A} \end{aligned}$$

To calculate the new speed n_2, we have to calculate the new back emf:

$$\begin{aligned} E_{b2} = k_g I_{f2} n_2 = k_g \times 0.95 \times n_2 = 220 - 20 \times 0.5 &= 210\text{V} \\ k_g \times 0.95 \times n_2 &= 210\text{V} \\ \therefore \frac{k_g \times 0.95 \times n_2}{k_g \times 1 \times 1000} &= \frac{210.5}{210} \\ \text{or, } n_2 &= \frac{210.5}{210} \times \frac{1000}{0.95} \\ \therefore n_2 &= 1055.14 \text{ rpm} \end{aligned}$$

41.3 Problems on Series Motor

The steps to solve a series motor problem are δ similar to that of solving a shunt motor problem. One has to write down the torque equations and back emf equations corresponding to steady state operating points as before. However, the following points, which distinguishes a series motor from a shunt motor should be carefully noted.

1. Field coil being in series with the armature, in general field current I_f and armature current I_a are same.

2. The field coil resistance r_{se} of a series motor is low and is of the order of armature resistance r_a.

3. The back emf can be calculated as $E_b = V - I_a(r_{se} + r_a)$

4. The back emf E_b is also given by:

$$\begin{aligned} E_b &= k\phi n \\ &= k_g I_f n \quad \text{if saturation is neglected.} \\ &= k_g I_a n \end{aligned}$$

5. Torque developed by the motor is given by:

$$\begin{aligned} T_e &= k\phi I_a \\ &= k' I_f I_a \quad \text{if saturation is neglected.} \\ &= K_t I_a^2 \end{aligned}$$

6. One should be careful for situations when field current and armature current may not be same. One such situation occurs when a diverter resistance is connected across the field coil for controlling speed.

1. A 220 V d.c series motor has armature and field resistances of 0.15 Ω and 0.10 Ω respectively. It takes a current of 30 A from the supply while running at 1000 rpm. If an external resistance of 1 Ω is inserted in series with the motor, calculate the new steady state armature current and the speed. Assume the load torque remains constant.

Solution

The problem has first been be pictured in the following figure 41.3.

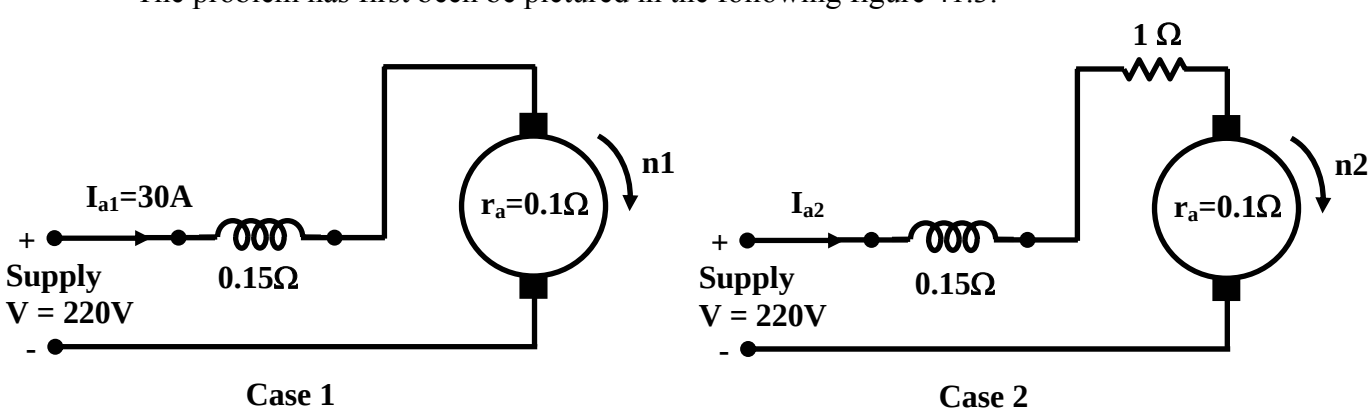

Figure 41.3:

Since the load torque remains constant in both the cases, we have:

$$\begin{aligned} T_{e1} = T_{e2} &= T_L \\ \text{or, } K_t I_{a1}^2 &= K_t I_{a2}^2 \\ \text{or, } 30^2 &= I_{a2}^2 \\ \therefore I_{a2} &= 30\text{A} \end{aligned}$$

Now equations involving back emfs:

$$\begin{aligned} E_{b1} &= V - I_{a1}(r_{se} + r_a) \\ K_g I_{a1} n_1 &= 220 - 30(0.1 + 0.15) \\ K_g 30 \times 1000 &= 212.5 \text{ V} \end{aligned}$$

In the second case:

$$\begin{aligned} E_{b2} &= V - I_{a2}(r_{se} + r_a + r_{ext}) \\ K_g I_{a2} n_2 &= 220 - 30(0.1 + 0.15 + 1) \\ K_g 30 n_2 &= 182.5 \text{ V} \end{aligned}$$

Thus taking the ratio of Eb2 and Eb1 we get:

$$\begin{aligned} \frac{k_g \times 30 \times n_2}{k_g \times 30 \times 1000} &= \frac{182.5}{212.5} \\ \therefore n_2 &= \frac{182.5}{212.5} \times 1000 \\ \text{or, } n_2 &= 858.8 \text{ rpm} \end{aligned}$$

2. A 220 V d.c series motor has armature and field resistances of 0.15 Ω and 0.10 Ω respectively. It takes a current of 30 A from the supply while running at 1000 rpm. If an external resistance of 1 Ω is inserted in series with the motor, calculate the new steady state armature current and the speed. Assume the load torque is proportional to the square of the speed i.e., $T_L \propto n^2$.

Solution

This problem is same as the first one except for the fact load torque is not constant but proportional to the square of the speed. Thus:

$$\begin{aligned} \frac{T_{e2}}{T_{e1}} &= \frac{T_{L2}}{T_{L1}} \\ \frac{T_{e2}}{T_{e1}} &= \frac{n_2^2}{n_1^2} \\ \frac{I_{a2}^2}{I_{a1}^2} &= \frac{n_2^2}{n_1^2} \\ \frac{I_{a2}^2}{30^2} &= \frac{n_2^2}{1000} \\ \text{or, } n_2^2 &= 1.11 \times I_{a2}^2 \\ \therefore n_2 &= 1.05 I_{a2} \end{aligned}$$

Ratio of back emfs give:

$$\frac{E_{b2}}{E_{b1}} = \frac{220 - I_{a2} \times 1.25}{212.5}$$

$$\frac{K_g I_{a2} n_2}{K_g I_{a1} n_1} = \frac{220 - I_{a2} \times 1.25}{212.5}$$

$$\frac{K_g I_{a2} n_2}{K_g \times 30 \times n_1} = \frac{220 - I_{a2} \times 1.25}{212.5}$$

$$\frac{I_{a2} \times 1.05 \times I_{a2}}{30 \times 1000} = \frac{220 - I_{a2} \times 1.25}{212.5}$$

$$1.05 I_{a2}^2 = 141.18(220 - I_{a2} \times 1.25)$$

$$1.05 I_{a2}^2 + 176.48 I_{a2} - 31059.6 = 0$$

Solving we get, $I_{a2} \approx 107.38\ A$

Hence speed, $n_2 = 1.05 \times I_{a2}$

$= 1.05 \times 107.38$

or, $n_2 = 112.75$ rpm.

Next let us solve a problem when a diverter resistance is connected across the field coil.

3. A 220 V d.c series motor has armature and field resistances of 0.15 Ω and 0.10 Ω respectively. It takes a current of 30 A from the supply while running at 1000rpm. If a *diverter* resistance of 0.2 Ω is connected across the field coil of the motor, calculate the new steady state armature current and the speed. Assume the load torque remains constant.

Solution

Following figure 41.4 shows the 2 cases in which the motor operate.

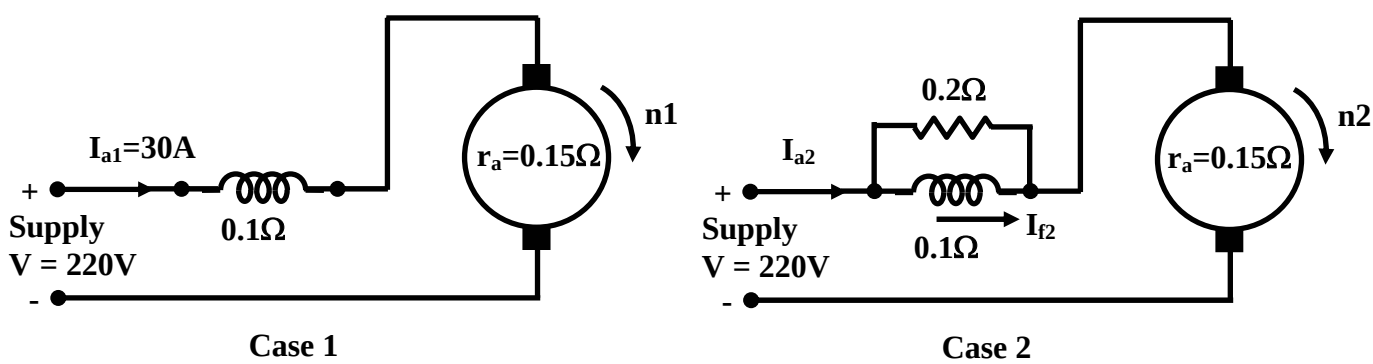

Figure 41.4:

In the second case it may be noted that $I_{f2} \neq I_{a2}$. In fact, I_{f2} is a fraction of I_{a2}. Since the field coil and diverter are connected in parallel we have:

$$I_{f2} = \frac{R_f}{R_f + R_d} \times I_{a2}$$

$$= \frac{0.1}{0.1+0.2} \times I_{a2}$$

$$\therefore I_{f2} = \frac{1}{3} \times I_{a2}$$

Since load torque remains constant, we have:

$$T_{e1} = T_{e2} = T_L$$

$$\text{or, } K_t I_{a1}^2 = K_t I_{f2} I_{a2}$$

$$\text{or, } 30^2 = I_{f2} I_{a2}$$

$$\text{or, } 30^2 = \frac{1}{3} \times I_{a2} \times I_{a2}$$

$$\text{or, } I_{a2}^2 = 3 \times 900$$

$$\therefore I_{a2} = 51.96 \text{ A}$$

$$\text{and } I_{f2} = 17.32 \text{ A}$$

Now we calculate the back emfs:

$$E_{b1} = V - I_{a1}(r_{se} + r_a)$$

$$K_g I_{a1} n_1 = 220 - 30(0.1 + 0.15)$$

$$K_g 30 \times 1000 = 212.5 \text{ V}$$

In the second case:

$$E_{b2} = V - I_{a2}\left(\frac{r_{se} \times r_d}{r_{se} + r_d} + r_a\right)$$

$$K_g I_{f2} n_2 = 220 - 51.96\left(\frac{0.1 \times 0.2}{0.1 + 0.2} + 0.15\right)$$

$$K_g \times 17.32 \times n_2 = 220 - 51.96(0.67 + 0.15)$$

$$K_g \times 17.32 \times n_2 = 177.39 \text{ V}$$

Thus taking the ratio of Eb2 and Eb1 we get:

$$\frac{k_g \times 17.32 \times n_2}{k_g \times 30 \times 1000} = \frac{177.39}{212.5}$$

$$\therefore n_2 = \frac{177.39}{212.5} \times 1000$$

$$\text{or, } n_2 = 858.8 \text{ rpm}$$

41.4 D.C generator problems

1. The following data refer to the O.C.C of a D.C separately excited generator at 1000 rpm.

Field current in A:	0.0	0.2	0.3	0.4	0.5	0.6	0.7	0.8	0.9	1.0	1.1	1.2
Armature voltage in V:	5	40	75	100	124	145	162	178	188	195	200	205

The machine is now connected as a *shunt generator* with a total field resistance of 200 Ω and driven at 1000 rpm. Estimate *graphically*: (i) the voltage to which the generator will

build up at no load. (ii) the armature, field and load currents when the terminal voltage is found to be 150 V. Neglect the effect of *armature reaction* and brush drop and assume armature resistance r_a to be 0.8 Ω. (iii) Finally estimate the steady state armature current when the machine terminals are shorted.

Solution

First of all the OCC of the generator is plotted in a graph paper as shown in figure 41.5.

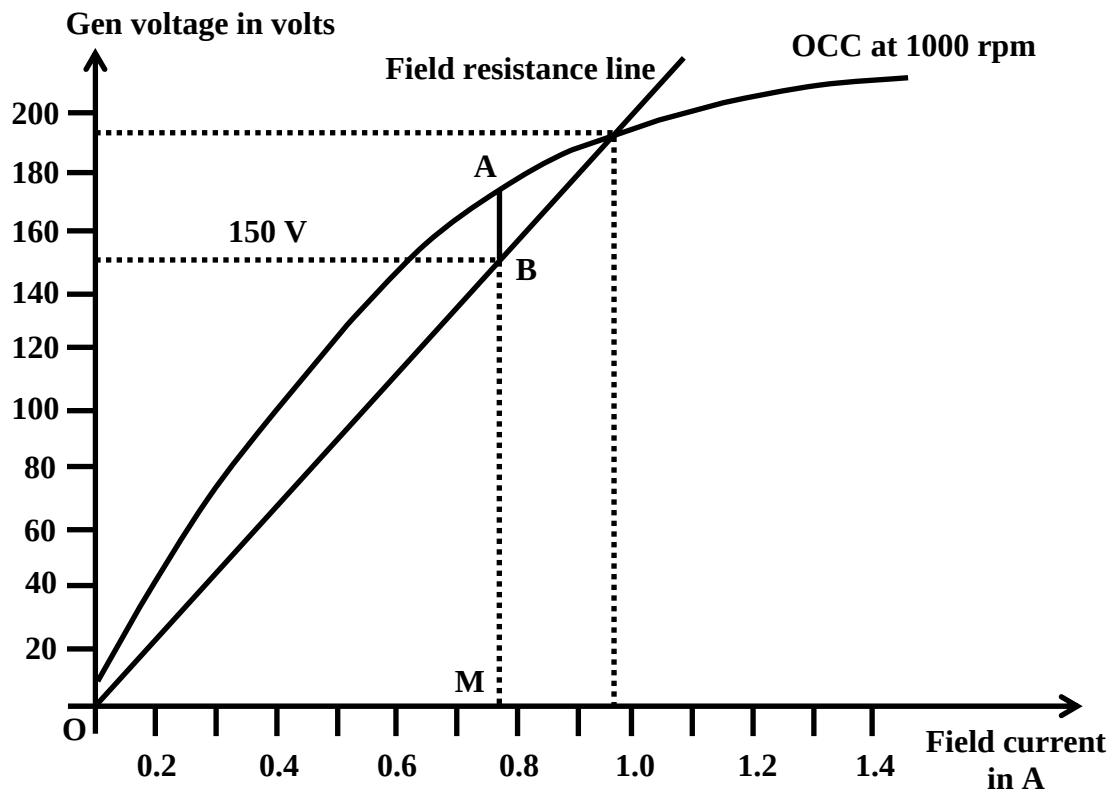

Figure 41.5:

(i) The total field circuit resistance is given to be $R_f = 200$ Ω. The R_f line is now drawn on the same graph paper passing through the origin. The point of intersection of the R_f line and the OCC decides the final no load voltage and can be read from the graph as 192 V and the corresponding field current is 0.96 A.

(ii) Since the terminal voltage V is 150 V(= BM), field current I_f is OM = 0.77 A. Generated voltage E is given by AM. But we know $E = I_a r_a + V$. Hence $I_a r_a = E - V$ = AM – BM = AB. Now from the graph AB = 25 V. $\therefore I_a = 25/0.8 = 31.25$ A. So load current $I_L = I_a - I_f = 31.25 - 0.77 = 30.48$ A. Various currents are shown in the circuit diagram (figure 41.6).

41.5 Operation of d.c machine connected to d.c bus (fixed d.c voltage)

Generally a d.c machine connected to fixed voltage source is expected to operate as a motor drawing current from the source as shown in figure 41.7 (a). However, the same machine may operate as a generator as well feeding power to the d.c bus as shown in figure 41.7 (b). That it

will act as a motor or generator is decided by the fact whether the generated emf E of the machine is *less than* or *more than* the supply voltage V. In figure 41.7 (a), $E < V$ so armature will draw current given by $I_a = (V - E)/r_a$ and the machine acts as motor.

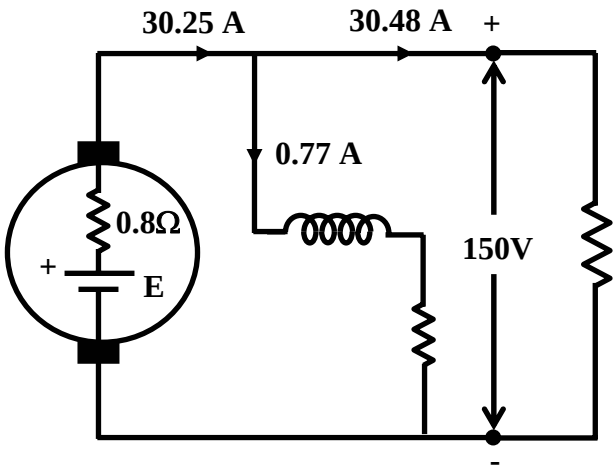

Figure 41.6:

However by some means if E could be made greater than the supply voltage V, the direction of armature current will be reversed and its value is given by $I_a = (E - V)/r_a$ i.e., a current $I_L = I_a - I_f$ will be fed to the supply and the machine will act as a generator. Of course to achieve this, one has to remove the mechanical load from the shaft and run it at higher speed with a prime mover to ensure $E > V$. Remember E being equal to $k_g I_f n$ and I_f held constant, one has to increase speed so as to make E more than V. The following problem explains the above operation,

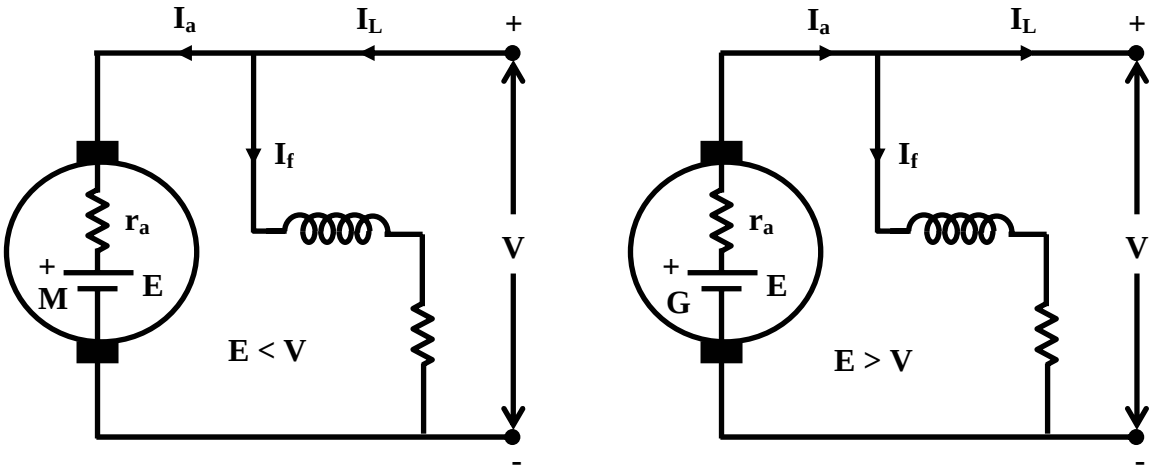

(a) Motoring **(b) Generating**

Figure 41.7:

2. A 200 V, d.c shunt machine has an armature resistance of 0.5 Ω and field resistance of 200 Ω. The machine is running at 1000 rpm as a motor drawing 31 A from the supply mains. Calculate the speed at which the machine must be driven to achieve this as generator.

Solution

First draw the circuit diagrams showing the motoring and generating mode of operation indicating the currents and their directions as in figure 41.8.

For motor mode:

Current drawn from supply, I_L = 31 A

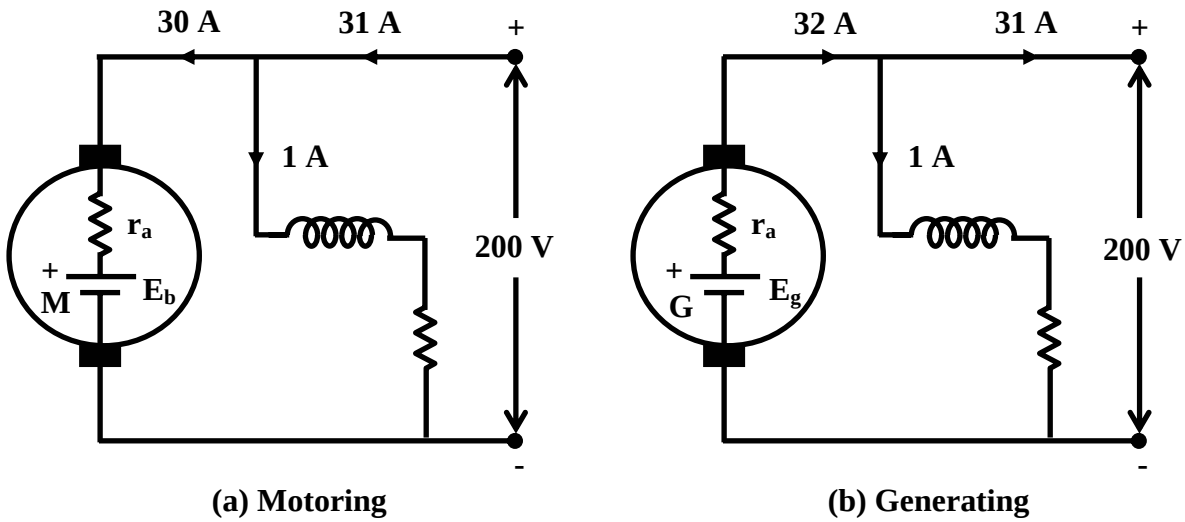

Figure 41.8:

$$\begin{aligned}
\text{Field current, } I_f &= 200/200 = 1 \text{ A} \\
\text{Armature current, } I_{a1} &= 31 - 1 = 30 \text{ A} \\
\text{Back emf, } E_b &= 200 - 30 \times 0.5 \\
\text{or, } kI_f n_1 &= 185 \text{ V} \\
\text{Since speed, } n_1 &= 1000 \textit{ rpm} \\
\text{so, } k \times 1 \times 1000 &= 185 \text{ V}
\end{aligned}$$

Similarly for generator mode:

$$\begin{aligned}
\text{Current fed to supply, } I_L &= 31 \text{ A} \\
\text{Field current, } I_f &= 200/200 = 1 \text{ A} \\
\text{Armature, } I_{a2} &= 31 + 1 = 32 \text{ A} \\
\text{Generated emf, } E_g &= 200 + 32 \times 0.5 \\
\text{or, } k\, I_f n_2 &= 216\text{V where } n_2 \text{ is the unknown speed}
\end{aligned}$$

Now taking the ratio of E_g and E_b we get:

$$\frac{E_g}{E_b} = \frac{k \times 1 \times n_2}{k \times 1 \times 1000} = \frac{216}{185}$$

$$n_2 = \frac{216}{185} \times 1000 = 1167.5 \text{ rpm}$$

Module 10

Measuring Instruments

Lesson 42

Study of DC-AC Measuring Instruments

Objectives

- To understand the basic construction of a permanent magnet moving coil (PMMC) instrument and its operation.
- Sketch and explain circuit diagrams for electromechanical dc ammeters and voltmeters.
- To understand how a single instrument may be used for multi-range ammeters and voltmeters.
- To study the advantage and limitation of PMMC instruments.
- To understand the basic construction of Moving-iron Instrument and its principle operation.
- To study the advantage and errors involved in moving-iron instruments.

L.42.1 Introduction

Measuring instruments are classified according to both the quantity measured by the instrument and the principle of operation. Three general principles of operation are available: (i) electromagnetic, which utilizes the magnetic effects of electric currents; (ii) electrostatic, which utilizes the forces between electrically-charged conductors; (iii) electro-thermic, which utilizes the heating effect.

Electric measuring instruments and meters are used to indicate directly the value of current, voltage, power or energy. In this lesson, we will consider an electromechanical meter (input is as an electrical signal results mechanical force or torque as an output) that can be connected with additional suitable components in order to act as an ammeters and a voltmeter. The most common analogue instrument or meter is the permanent magnet moving coil instrument and it is used for measuring a dc current or voltage of a electric circuit. On the other hand, the indications of alternating current ammeters and voltmeters must represent the RMS values of the current, or voltage, respectively, applied to the instrument.

L.42.1.1 Various forces/torques required in measuring instruments

- Deflecting torque/force: The defection of any instrument is determined by the combined effect of the deflecting torque/force, control torque/force and damping torque/force. The value of deflecting torque must depend on the electrical signal to be measured; this torque/force causes the instrument movement to rotate from its zero position.
- Controlling torque/force: This torque/force must act in the opposite sense to the deflecting torque/force, and the movement will take up an equilibrium or definite position when the deflecting and controlling torque are equal in magnitude. Spiral springs or gravity usually provides the controlling torque.
- Damping torque/force: A damping force is required to act in a direction opposite to the movement of the moving system. This brings the moving system to rest at the deflected position reasonably quickly without any oscillation or very small oscillation. This is provided by i) air friction ii) fluid friction iii) eddy current. It should be pointed out that any damping force shall not influence the steady state deflection produced by a given deflecting force or torque. Damping force

increases with the angular velocity of the moving system, so that its effect is greatest when the rotation is rapid and zero when the system rotation is zero. Details of mathematical expressions for the above torques are considered in the description of various types of instruments.

L.42.2 General Theory Permanent Magnet Moving Coil (PMMC) Instruments

The general theory of moving-coil instruments may be dealt with considering a rectangular coil of N turns, free to rotate about a vertical axis.

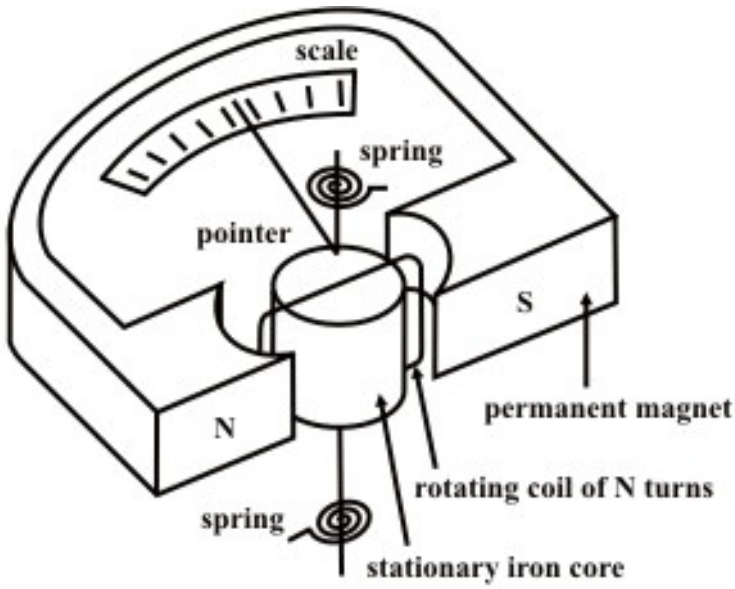

Fig. 42.1(a): Permanent Magnet Moving Coil Instrument.

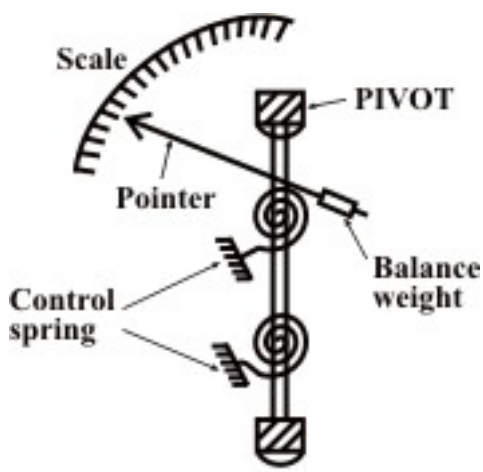

Fig. 42.1(b)

Fig. 42.1(a) shows the basic construction of a PMMC instrument. A moving coil instrument consists basically of a permanent magnet to provide a magnetic field and a small lightweight coil is wound on a rectangular soft iron core that is free to rotate around

its vertical axis. When a current is passed through the coil windings, a torque is developed on the coil by the interaction of the magnetic field and the field set up by the current in the coil. The aluminum pointer attached to rotating coil and the pointer moves around the calibrated scale indicates the deflection of the coil. To reduce parallax error a mirror is usually placed along with the scale. A balance weight is also attached to the pointer to counteract its weight (see Fig. 42.1(b)). To use PMMC device as a meter, two problems must be solved. First, a way must be found to return the coil to its original position when there is no current through the coil. Second, a method is needed to indicate the amount of coil movement. The first problem is solved by the use of hairsprings attached to each end of the coil as shown in Fig. 42.1(a). These hairsprings are not only supplying a restoring torque but also provide an electric connection to the rotating coil. With the use of hairsprings, the coil will return to its initial position when no current is flowing though the coil. The springs will also resist the movement of coil when there is current through coil. When the developing force between the magnetic fields (from permanent magnet and electro magnet) is exactly equal to the force of the springs, the coil rotation will stop. The coil set up is supported on jeweled bearings in order to achieve free movement. Two other features are considered to increase the accuracy and efficiency of this meter movement. First, an iron core is placed inside the coil to concentrate the magnetic fields. Second, the curved pole faces ensure the turning force on the coil increases as the current increases.

It is assumed that the coil sides are situated in a uniform radial magnetic field of flux density $B\ wb/m^2$, let the length of a coil side (within the magnetic field) be l (meter), and the distance from each coil side to the axis be r (meter).

Principle of operation

It has been mentioned that the interaction between the induced field and the field produced by the permanent magnet causes a deflecting torque, which results in rotation of the coil. The deflecting torque produced is described below in mathematical form:

Deflecting Torque: If the coil is carrying a current of $i\ amp.$, the force on a coil side $= B\,i\,l\,N$ (newton, N). (42.1)

$\therefore$ Torque due to both coil sides $= (2r)(B\,i\,l\,N)\ (Nm)$

$$= G\,i\ (Nm) \tag{42.2}$$

where G is the Galvanometer constant and it is expressed as $G = 2rBlN\ (Nm/amp.)$ $= NBA\,(Nm/amp.)$. (note $A = 2rl$ = area of the coil.)

N = no. of turns of the coil.

B = flux density in Wb/m^2 Wb/m^2.

l = length of the vertical side of the coil, m.

$2r$ = breadth of the coil, m

i = current in ampere.

$A = 2rl$ = area, m^2

Truly speaking, the equation (42.2) is valid while the iron core is cylindrical and the air gap between the coil and pole faces of the permanent magnet is uniform. This result the

flux density B is constant and the torque is proportional to the coil current and instrument scale is linear.

Controlling Torque: The value of control torque depends on the mechanical design of the control device. For spiral springs and strip suspensions, the controlling torque is directly proportional to the angle of deflection of the coil.

i.e., Control torque $= C\,\theta$ (42.3)

where, θ = deflection angle in radians and C = spring constant Nm/rad.

Damping Torque: It is provided by the induced currents in a metal former or core on which the coil is wound or in the circuit of the coil itself. As the coil moves in the field of the permanent magnet, eddy currents are set up in the metal former or core. The magnetic field produced by the eddy currents opposes the motion of the coil. The pointer will therefore swing more slowly to its proper position and come to rest quickly with very little oscillation. Electromagnetic damping is caused by the induced effects in the moving coil as it rotates in magnetic field, provided the coil forms part of closed electric circuit.

Let the velocity of the coil is $\omega(t) = \frac{d\theta}{dt} rad./\sec.$, and let the resistance of the coil circuit with N turns be $R\Omega$. Then the velocity of a coil side $v(t) = r\frac{d\theta}{dt}$ $(m/\sec.)$

$\therefore$ E.m.f induced in each turn of the coil = $2Blv = 2Blr\frac{d\theta}{dt}$ $volt.$ (note both the sides of the coil having same e.m.fs but they are additive in nature).

$\therefore$ Induced current across N turns of coil = $\frac{2BlN\,r}{R}\frac{d\theta}{dt} = \frac{G}{R}\frac{d\theta}{dt}$ $amps.$ (R = resistance of coil)

By Lenz's Law, torque produced = $Gi = G\frac{G}{R}\frac{d\theta}{dt} = \frac{G^2}{R}\frac{d\theta}{dt} = D\frac{d\theta}{dt}$ (Nm) = opposing torque. Note, $D = \frac{G^2}{R}$ is the damping constant for the induced currents in the coil due to its motion. This damping torque is active when the coil posses a change in deflection. A metal former or core may be considered as a single-turn coil and if its dimensions are l_1 *and* r_1 and its resistance R_1. Similarly, damping torque for the former or core can be computed as

Damping torque (for the core or former) = $D_1\frac{d\theta}{dt}$ (Nm) where D_1 = damping constant due to induced currents in the core or former. In addition to the induced current damping, there will be a small damping torque due to air friction. Air damping torque ($D_2\frac{d\theta}{dt}$) may be assumed to be proportional to the angular velocity of the coil.

Equation of motion: The resulting torque in a coil or motion of a coil in a magnetic field is due to the combined effect of deflecting torque (T_d), controlling torque ($C\theta$), damping torque ($D\frac{d\theta}{dt}$) and it is expressed mathematically as

$$J\frac{d^2\theta}{dt^2} = Gi - C\theta - D\frac{d\theta}{dt} \quad \Rightarrow \quad J\frac{d^2\theta}{dt^2} + D\frac{d\theta}{dt} + C\theta = Gi$$

where J is the moment of inertia of the moving parts. One can easily study the dynamic behavior of the above second order system by solving the differential equation.

Remarks: When the moving system reached at steady state i.e. at final deflected position, the controlling torque becomes equal and opposite to the deflecting torque. The deflecting angle is directly proportional to the current in the movable coil (see eq. 42.2). For this reason, the scale of the moving coil instrument is calibrated linearly.

L.42.3 A multi-range ammeters and voltmeters

An ammeter is required to measure the current in a circuit and it therefore connected in series with the components carrying the current. If the ammeter resistance is not very much smaller than the load resistance, the load current can be substantially altered by the inclusion of the ammeter in the circuit. To operate a moving coil instrument around a current level 50ma is impractical owing to the bulk and weight of the coil that would be required. So, it is necessary to extend the meter-range shunts (in case of ammeters) and multipliers (in case of volt meters) are used in the following manner.

For higher range ammeters a low resistance made up of manganin (low temperature coefficient of resistance) is connected in parallel to the moving coil (see Fig.42.2 (a)) and instrument may be calibrated to read directly to the total current.

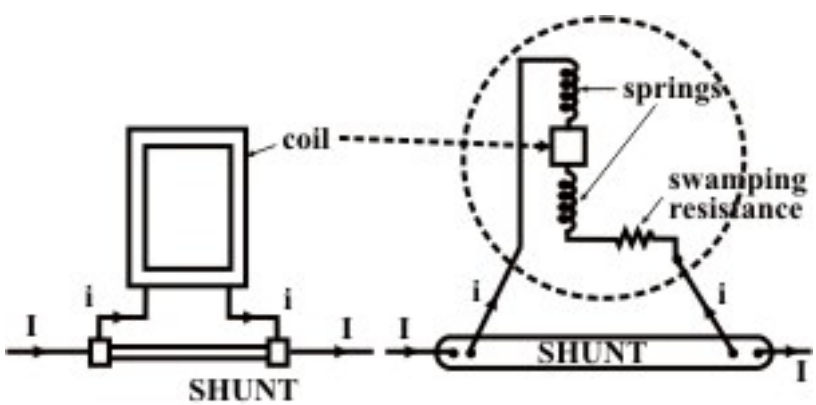

Fig. 42.2(a)

They are called shunts. The movement of PMMC instrument is not inherently insensitive to temperature, but it may be temperature-compensated by the appropriate use of series and shunt resistors of copper and manganin. Both the magnetic field strength and spring-tension decrease with an increase in temperature. On other side, the coil resistance

increases with an increase in temperature. These changes lead to make the pointer read low for a given current with respect to magnetic field strength and coil resistance. Use of manganin resistance (known as swamping resistance which has a temperature coefficient practically zero) in series with the coil resistance can reduce the error due to the variation of resistance of the moving coil. The swamping resistance (r) is usually three times that of coil thereby reducing a possible error of, say, 4% to 1%. A multirange ammeter can be constructed simple by employing several values of shunt resistances, with a rotary switch to select the desired range. Fig. 42.2(b) shows the circuit arrangement.

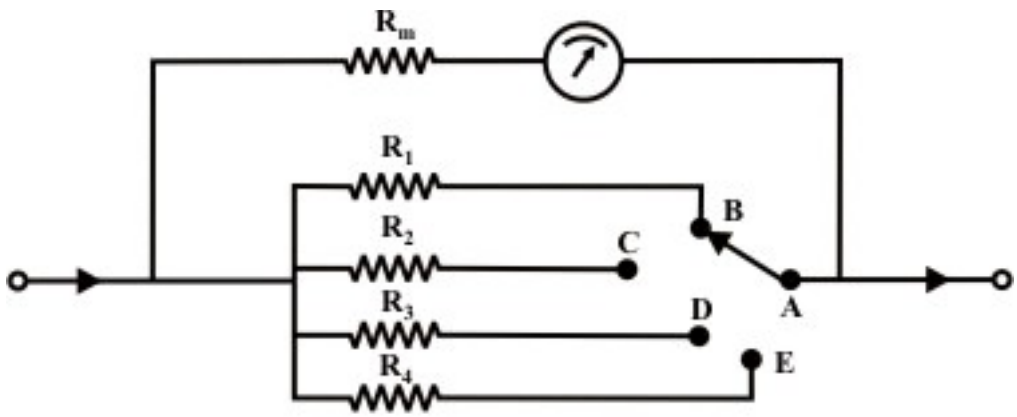

Fig. 42.2(b): Multi-range ammeter circuit

When an instrument is used in this fashion, care must be taken to ensure shunt does not become open-circuited, even for a very short instant. When the switch is moved from position 'B' to 'C' or moved to any positions, the shunt resistance will remain open-circuited for a fraction of time, resulting a very large current may flow through the ammeter and damage the instrument. To avoid such situation, one may use the make-before-break switch as shown in Fig.42.(c).

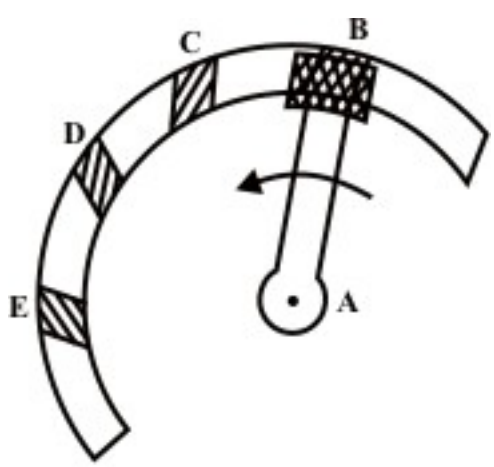

Fig. 42.2(c): Make-before break

The wide-ended moving contact connected to the next terminal to which it is being moved before it loses contact with the previous terminals. Thus, during the switching

time there are two resistances are parallel with the instrument and finally the required shunt only will come in parallel to the instrument.

Example- L42.1 A PMMC instrument has a coil resistance of 100Ω and gives a full-scale deflection (FSD) for a current of $500\,\mu A$. Determine the value of shunt resistance required if the instrument is to be employed as an ammeter with a FSD of $5A$.

Solution: Let current flowing through the shunt is I_s. From the circuit shown in Fig.42.3, one can the following expression using the parallel divided rule.

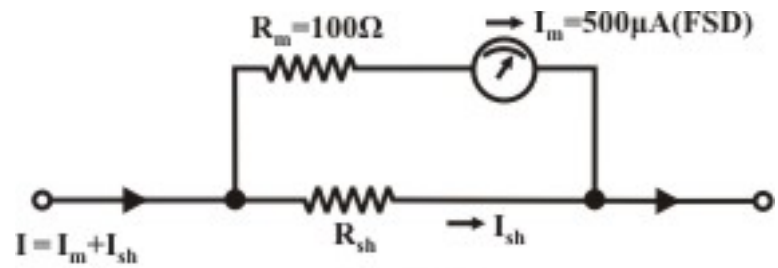

Fig. 42.3

$$I_m = \frac{R_{sh}}{R_{sh} + R_m} I \qquad (42.4)$$

where $R_{sh} = shunt\ resistance$, $R_m = ammeter\ resistance = 100\Omega$, $I_m =$ ammeter full scale deflection current = $500\,\mu A$ and $I =$ desired range of ammeter = $5\,A$. From the above expression (42.4) we get,

$$500 \times 10^{-6} = \frac{R_{sh}}{R_{sh} + 100} \times 5 \quad \Rightarrow R_{sh} = 0.01\Omega$$

Multi-range voltmeter: A dc voltmeter is constructed by a connecting a resistor in series with a PMMC instrument. Unlike an ammeter, a voltmeter should have a very high resistance R_{se} and it is normally connected in parallel with the circuit where the voltage is to be measured (see Fig.42.4). To minimize voltmeter loading, the voltmeter operating current should be very small i.e., the resistance connected in series with the coil should be high.

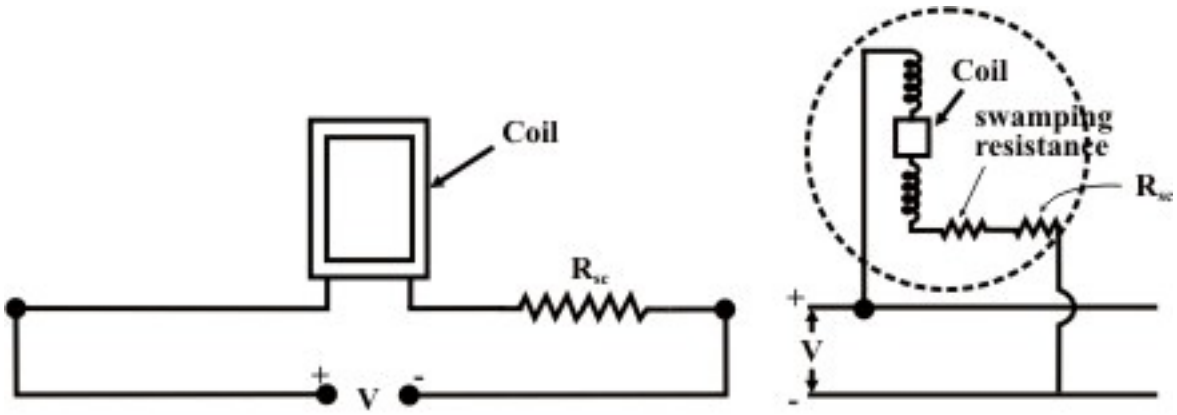

Fig. 42.4

The moving coil instruments can be suitably modified to act either as an ammeter or as a voltmeter. For multi-range voltmeters the arrangement is as follows: In Fig.42.5 any one of several multiplier resistors is selected by means of a rotary switch. Unlike the case of the ammeter, the rotary switch used with the voltmeter should be a break-before make type, that is, moving contact should disconnect from one terminal before connecting to the next terminal.

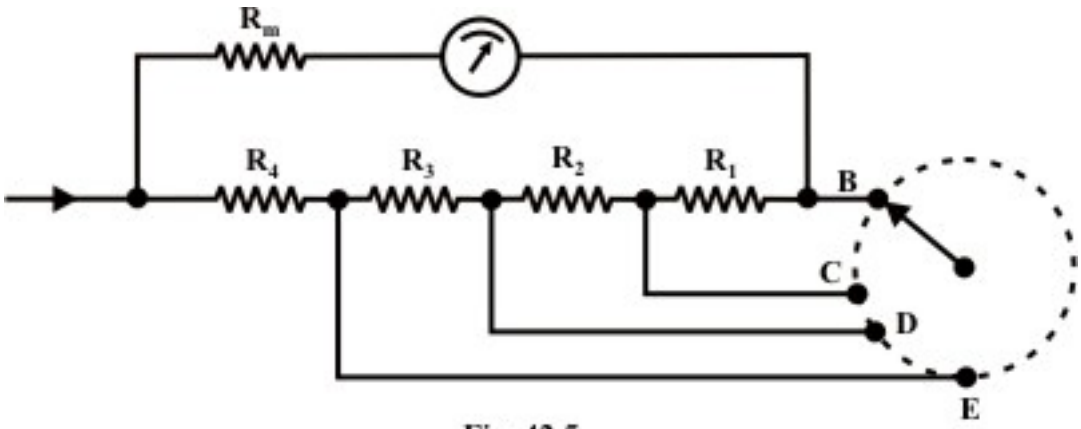

Fig. 42.5

Example-42.2 A PMMC meter with a coil resistance 100Ω and a full scale deflection current of $100\mu A$ is to be used in the voltmeter circuit as shown in Fig.42.6. The voltmeter ranges are to be $50V, 100V, and\ 150V$. Determine the required value of resistances for each range.

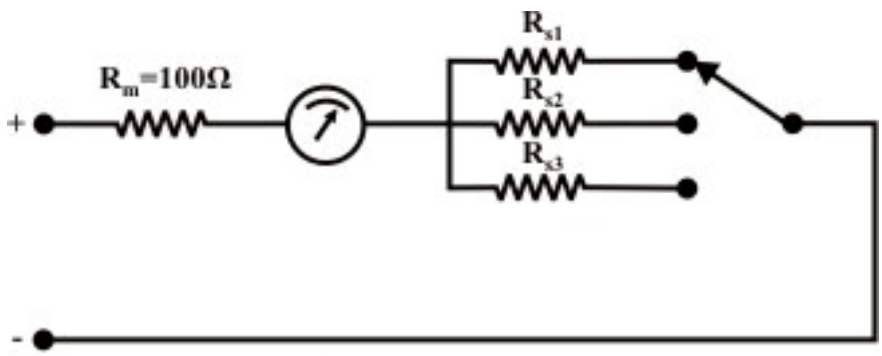

Fig. 42.6: Multirange voltmeter.

Solution: From the circuit shown in Fig.42.6, one can write the expression for the $50V$ range as

$$I = \frac{V}{R_m + R_s} \Rightarrow R_S = \frac{V}{I} - R_m \qquad (42.5)$$

Now for (i) $V = 50V$, $I = 100\mu A = 100 \times 10^{-6}\ A$, *and* $R_m = 100\Omega$, the value of series resistance $(R_{s1}) = 0.4999\,M\,\Omega$.

(ii) $V = 100V$, $I = 100\mu A = 100 \times 10^{-6}\ A$, *and* $R_m = 100\Omega$, the required value of resistance (R_{s2}) = $0.9999\,M\,\Omega$

(iii) $V = 150V$, $I = 100\mu A = 100 \times 10^{-6} A$, *and* $R_m = 100\Omega$, the required series resistance $(R_{s3}) = 1.4999\,M\,\Omega$.

L.42.4 Advantages, Limitations and sources of errors

Advantages:

- The scale is uniformly divided (see at steady state , $\theta = \frac{G}{C} I_s$).
- The power consumption can be made very low ($25\,\mu W$ *to* $200\,\mu W$).
- The torque-weight ratio can be made high with a view to achieve high accuracy.
- A single instrument can be used for multi range ammeters and voltmeters.
- Error due to stray magnetic field is very small.

Limitations:

- They are suitable for direct current only.
- The instrument cost is high.
- Variation of magnet strength with time.

The Errors are due to:

i) Frictional error, ii) Magnetic decay, iii) Thermo electric error, iv) Temperature error.

Errors can be reduced by following the steps given below:

- Proper pivoting and balancing weight may reduce the frictional error.
- Suitable aging can reduce the magnetic decay.
- Use of manganin resistance in series (swamping resistance) can nullify the effect of variation of resistance of the instrument circuit due to temperature variation.
- The stiffness of spring, permeability of magnetic core (Magnetic core is the core of electromagnet or inductor which is typically made by winding a coil of wire around a ferromagnetic material) decreases with increases in temperature.

Ammeter Sensitivity:

Ammeter sensitivity is determined by the amount of current required by the meter coil to produce full-scale deflection of the pointer. The smaller the amount of current required producing this deflection, the greater the sensitivity of the meter. A meter movement that requires only 100 microamperes for full- scale deflection has a greater sensitivity than a meter movement that requires 1 mA for the same deflection.

Voltmeter Sensitivity:

The sensitivity of a voltmeter is given in ohms per volt. It is determined by dividing the sum of the resistance of the meter (R_m), plus the series resistance (R_s), by the full-scale reading in volts. In equation form, sensitivity is expressed as follows:

$$Sensitivity = \frac{R_m + R_s}{E}$$

This is the same as saying the sensitivity is equal to the reciprocal of the full-scale deflection current. In equation form, this is expressed as follows:

$$sensitivy = \frac{ohms}{volt} = \frac{1}{volt/ohms} = \frac{1}{ampere}$$

Therefore, the sensitivity of a 100-microampere movement is the reciprocal of 0.0001 ampere, or 10,000 ohms per volt.

$$sensitivy = \frac{1}{ampere} = \frac{1}{0.0001} = 10,000 \ ohms \ per \ volt$$

L.42.5 Construction and Basic principle operation of Moving-iron Instruments

We have mentioned earlier that the instruments are classified according to the principles of operation. Furthermore, each class may be subdivided according to the nature of the movable system and method by which the operating torque is produced. Specifically, the electromagnetic instruments are sub-classes as (i) moving-iron instruments (ii) electro-dynamic or dynamometer instruments, (iii) induction instruments. In this section, we will discuss briefly the basic principle of moving-iron instruments that are generally used to measure alternating voltages and currents. In moving –iron instruments the movable system consists of one or more pieces of specially-shaped soft iron, which are so pivoted as to be acted upon by the magnetic field produced by the current in coil. There are two general types of moving-iron instruments namely (i)

Repulsion (or double iron) type (ii) Attraction (or single-iron) type. The brief description of different components of a moving-iron instrument is given below.

- **Moving element:** a small piece of soft iron in the form of a vane or rod
- **Coil:** to produce the magnetic field due to current flowing through it and also to magnetize the iron pieces.
- **In repulsion type**, a **fixed** vane or rod is also used and magnetized with the same polarity.
- **Control torque** is provided by spring or weight (gravity)
- **Damping torque** is normally pneumatic, the damping device consisting of an air chamber and a moving vane attached to the instrument spindle.
- **Deflecting torque** produces a movement on an aluminum pointer over a graduated scale.

L.42.5.1 Construction of Moving-iron Instruments

The deflecting torque in any moving-iron instrument is due to forces on a small piece of magnetically 'soft' iron that is magnetized by a coil carrying the operating current. In repulsion (Fig.42.7) type moving–iron instrument consists of two cylindrical soft iron vanes mounted within a fixed current-carrying coil. One iron vane is held fixed to the coil frame and other is free to rotate, carrying with it the pointer shaft. Two irons lie in the magnetic field produced by the coil that consists of only few turns if the instrument is an ammeter or of many turns if the instrument is a voltmeter. Current in the coil induces both vanes to become magnetized and repulsion between the similarly magnetized vanes produces a proportional rotation. The deflecting torque is proportional to the square of the current in the coil, making the instrument reading is a true 'RMS' quantity Rotation is opposed by a hairspring that produces the restoring torque. Only the fixed coil carries load current, and it is constructed so as to withstand high transient current. Moving iron instruments having scales that are nonlinear and somewhat crowded in the lower range of calibration. Another type of instrument that is usually classed with the attractive types of instrument is shown in Fig.42.8.

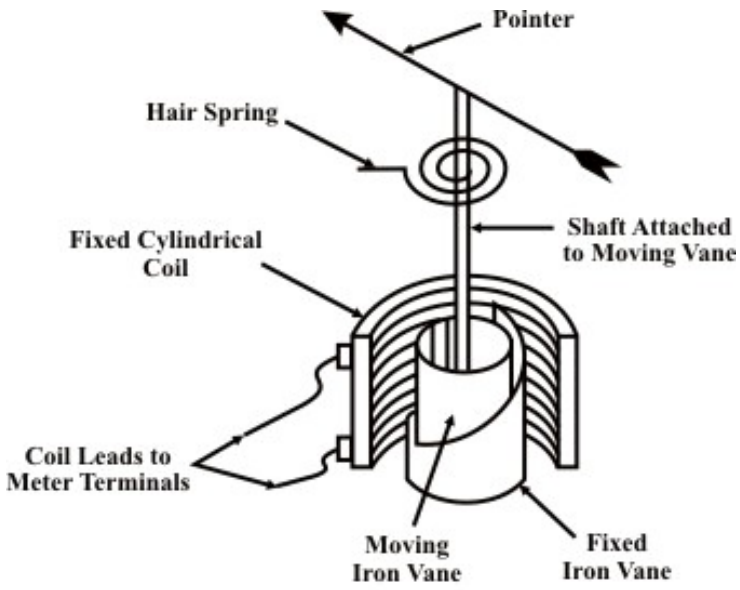

Fig. 42.7: Repulsion type.

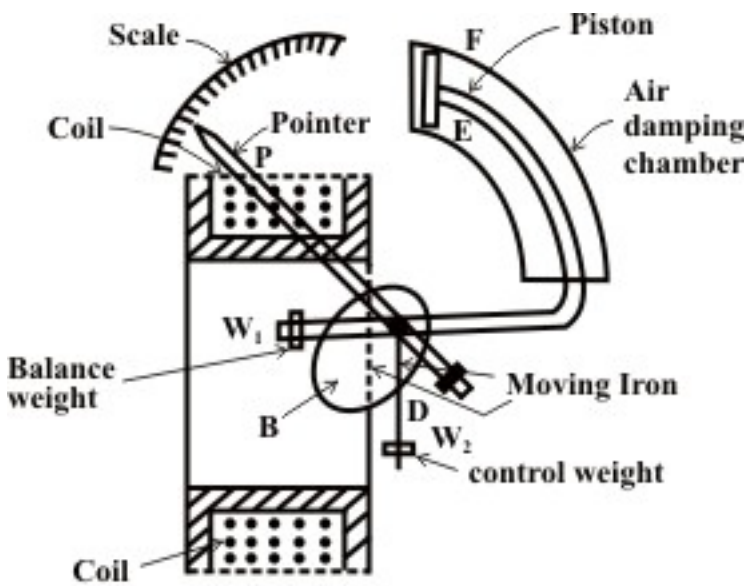

Fig. 42.8: Attraction type

This instrument consists of a few soft iron discs (B) that are fixed to the spindle (D), pivoted in jeweled bearings. The spindle (D) also carries a pointer (P), a balance weight (W_1), a controlling weight (W_2) and a damping piston (E), which moves in a curved fixed cylinder (F). The special shape of the moving-iron discs is for obtaining a scale of suitable form.

Remark: Moving-iron vanes instruments may be used for DC current and voltage measurements and they are subject to minor frequency errors only. The instruments may

be effectively shielded from the influence of external magnetic fields by enclosing the working parts, except the pointer, in a laminated iron cylinder with laminated iron end covers.

Torque Expressions: Torque expression may be obtained in terms of the inductance of the instrument. Suppose the initial current is I, the instrument inductance L and the deflection θ. Then let I change to $I + dI$, dI being a small change of current; as a result let θ changes to $(\theta + d\theta)$, *and* L *to* $(L + dL)$. In order to get an incremental change in current dI there must be an increase in the applied voltage across the coil.

Applied voltage $v = \dfrac{d(LI)}{dt} = I\dfrac{dL}{dt} + L\dfrac{dI}{dt}$ (42.6)

The electric energy supplied to the coil in dt is

$v\,I\,dt = I^2\,dL + IL\,dI$ (42.7)

Increase in energy stored in the magnetic field = $\frac{1}{2}(I + dI)^2(L + dL) - \frac{1}{2}I^2 L$

$$\simeq IL\,dI + \frac{1}{2}I^2 dL$$

(neglecting second and higher terms in small quantities)

If T is the value of the control torque corresponding to deflection θ, the extra energy stored in the control due to the change $d\theta$ is $T\,d\theta$. Then, the stored increase in stored energy $= \simeq IL\,dI + \frac{1}{2}I^2 dL + T\,d\theta$ (42.8)

From principle of the conservation of energy, one can write the following expression

Electric energy drawn from the supply = increase in stored energy + mechanical work done

$$I^2\,dL + IL\,dI = IL\,DI + \frac{1}{2}I^2 dL + T\,d\theta$$

$$T\,(torque) = \frac{1}{2}I^2\frac{dL}{d\theta}\ (Nm) \qquad (42.9)$$

Controlling torque:

i Spring control: $T_s = K_s\,\theta$ where K_S is the spring constant.

ii Gravity control: $T_g = K_g \sin\theta$. Where $K_g = mgl$

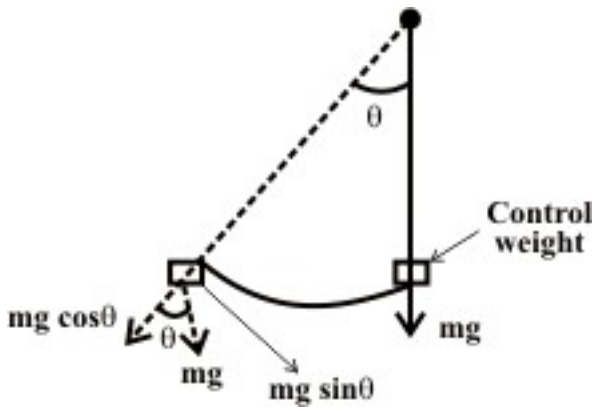

At equilibrium i.e. for steady deflection, Deflecting torque = Controlling torque. If the instrument is gravity controlled

$$T_D = T_C$$

$$KI = K_g \sin\theta \quad \Rightarrow \theta = \sin^{-1}\left(\frac{K}{K_g} I\right) \tag{42.10}$$

L.42.5.2 Ranges of Ammeters and Voltmeters

For a given moving-iron instrument the ampere-turns necessary to produce full-scale deflection are constant. One can alter the range of ammeters by providing a shunt coil with the moving coil.

L.42.5.2.1 Shunts and Multipliers for MI instruments

For moving-iron ammeters: For the circuit shown in Fig.42.9, let R_m *and* L_m are respectively the resistance and inductance of the coil and R_{sh} *and* L_{sh} the corresponding values for shunt.

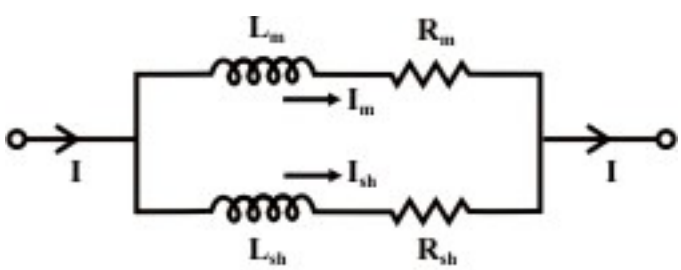

Fig. 42.9

The ratio of currents in two parallel branches is

$$\frac{I_{sh}}{I_m} = \sqrt{\frac{R_m^2 + (\omega L_m)^2}{R_{sh}^2 + (\omega L_{sh})^2}} = \frac{R_m\sqrt{1+\left(\frac{\omega L_m}{R_m}\right)^2}}{R_{sh}\sqrt{1+\left(\frac{\omega L_{sh}}{R_{sh}}\right)^2}}$$

The above ratio will be independent of frequency ω provided that the time constants of the two parallel branches are same i.e $\frac{L_m}{R_m} = \frac{L_{sh}}{R_{sh}}$

In other words, $\frac{I_{sh}}{I_m} = \frac{R_m}{R_{sh}}$ if $\frac{L_{sh}}{R_{sh}} = \frac{L_m}{R_m}$

Now,

$$I = I_{sh} + I_m = I_m \frac{R_m}{R_{sh}} + I_m = I_m\left(1 + \frac{R_m}{R_{sh}}\right)$$

Multipliers for the shunt = $\left(1 + \frac{R_m}{R_{sh}}\right)$. It is difficult to design a shunt with the appropriate inductance, and shunts are rarely incorporated in moving iron ammeters. Thus the multiple ranges can effectively be obtained by winding the instrument coil in sections which may be connected in series, parallel or series-parallel combination which in turn changing the total ampere-turns in the magnetizing coil.

For moving-iron voltmeters: Voltmeter range may be altered connecting a resistance in series with the coil. Hence the same coil winding specification may be employed for a number of ranges. Let us consider a high resistance R_{se} is connected in series with the moving coil and it is shown below.

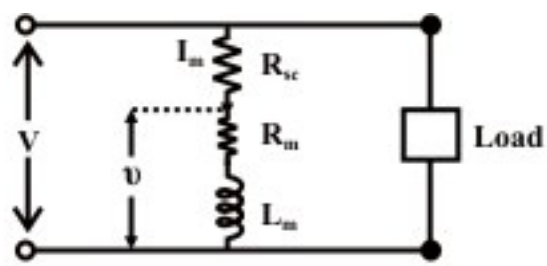

R_{se} is almost purely non inductive resistance of large value

$$v = I_m\sqrt{R_m^2 + (\omega L_m)^2}$$

$$V = I_m\sqrt{(R_{se} + R_m)^2 + (\omega L_m)^2}$$

$$\text{Multiplier} = m = \frac{V}{v} = \frac{\sqrt{(R_{se} + R_m)^2 + (\omega L_m)^2}}{\sqrt{R_m^2 + (\omega L_m)^2}}. \qquad (42.11)$$

Note: An ordinary arrangement with a non-inductive resistance in series with the fixed coil – results in error that increases as the frequency increases. The change of impedance

of the instrument with change of frequency introduces error in signal measurements. In order to compensate the frequency error, the multiplier may be easily shunted by the capacitor.

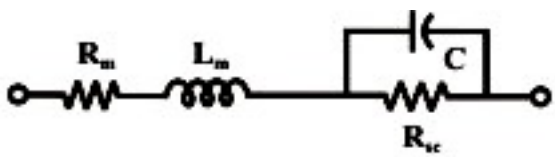

Fig.42.10: Connection for method of compensating frequency error in moving-iron voltmeter.

Advantages:

- The instruments are suitable for use in a.c and d.c circuits.
- The instruments are robust, owing to the simple construction of the moving parts.
- The stationary parts of the instruments are also simple.
- Instrument is low cost compared to moving coil instrument.
- Torque/weight ration is high, thus less frictional error.

Errors:

i. Errors due to temperature variation.
ii. Errors due to friction is quite small as torque-weight ratio is high in moving-iron instruments.
iii. Stray fields cause relatively low values of magnetizing force produced by the coil. Efficient magnetic screening is essential to reduce this effect.
iv. Error due to variation of frequency causes change of reactance of the coil and also changes the eddy currents induced in neighboring metal.
v. Deflecting torque is not exactly proportional to the square of the current due to non-linear characteristics of iron material.

L.42.6 Test your understanding (Marks: 40)

T.42.1 Sketch the circuit of an electro-mechanical ammeter, and briefly explain its operation. Comment on the resistance of an ammeter. [10]

T.42.2 Fig.42.11 shows a PMMC instrument has a coil resistance of $200\,\Omega$ and gives a FSD (full-scale deflection) for a current $200\,\mu A$. Calculate the value of shunt resistance required to convert the instrument into a $500\,mA$ ammeter. [5]

(Ans. $0.08\,\Omega$)

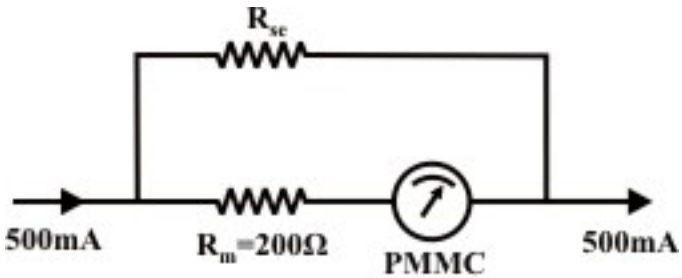

Fig. 42.11

T.42.3 A PMMC instrument has a resistance of 100Ω and FSD for a current of $400\,\mu A$. A shunt arrangement is shown in Fig.42.12 in order to have an multi-range ammeters. Determine the various ranges to which the ammeter may be switch. (Assume $R_1 = R_2 = R_3 = R_4 = 0.001\Omega$)

(Ans. $10\,A$, $13.32\,A$, $20\,A$, *and* $40\,A$) [9]

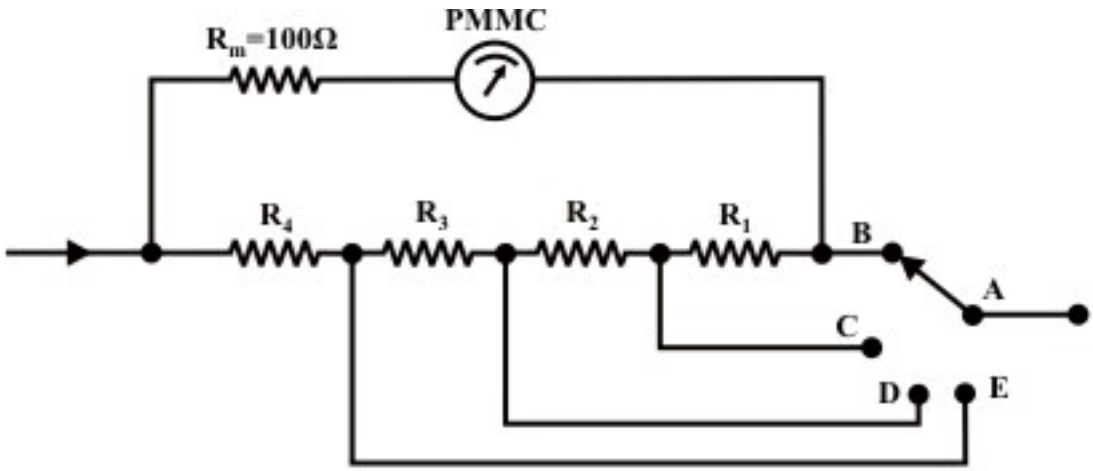

Fig. 42.12: An Ayrton shunt has several services connected shunts in parallel with PMMC.

T.42.4 Fig.42.13 shows a PMMC instrument with a resistance of 75Ω and FSD current of $100\,\mu A$ is to be used as a voltmeter with $200V$, $300V$, *and* $500V$ ranges. Determine the required value of multiplier resistor of each range.

(Ans. $2.0\,M\Omega$, $3.0\,M\Omega$, *and* $5.0\,M\,\Omega$) [8]

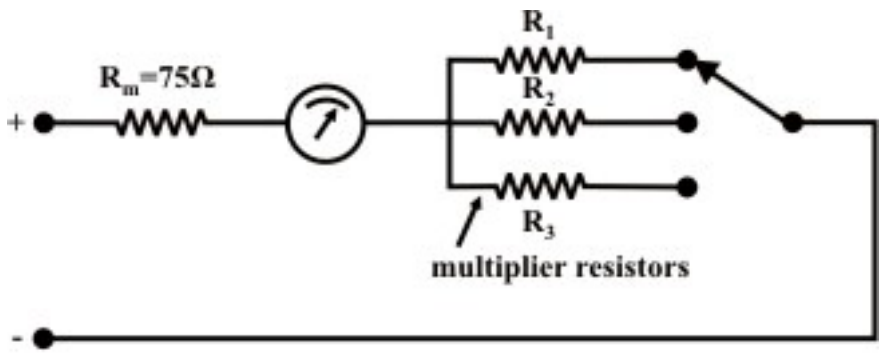

Fig. 42.13

T.42.5 Two resistors are connected in series across a $200V$ dc supply. The resistor values are $R_1 = 300\,k\Omega$ *and* $R_2 = 200k\Omega$. The voltmeter FSD is $250V$ and its sensitivity is $10k\Omega/V$. Determine the voltage across the resistance R_2: (i) without voltmeter in the circuit. (ii) with voltmeter connected.

(Voltmeter sensitivity $= \dfrac{Meter\ \ resistance + resistance\ of\ \ multiplier}{Range\ of\ voltmeter}$)

(Ans. $80V, 76.33V$) [8]

Module 10

Measuring Instruments

Lesson 43

Study of Electro-Dynamic Type Instruments

Objectives

- To understand the basic construction of a dynamometer instrument.
- Explain basic operation and development of torque expressions for ammeter, voltmeter and wattmeter.
- Study of ammeter, voltmeter and wattmeter connections.
- To investigate the errors involve in wattmeter readings and its compensation.
- Understanding the effect of inductance of voltage coil (moving coil) on the wattmeter readings.

L.43.1 Introduction

Electrodynamic type instruments are similar to the PMMC-type elements except that the magnet is replaced by two serially connected fixed coils that produce the magnetic field when energized (see Fig.43.1). The fixed coils are spaced far enough apart to allow passage of the shaft of the movable coil. The movable coil carries a pointer, which is balanced by counter weights. Its rotation is controlled by springs. The motor torque is proportional to the product of the currents in the moving and fixed coils. If the current is reversed, the field polarity and the polarity of the moving coil reverse at the same time, and the turning force continues in the original direction. Since the reversing the current direction does not reverse the turning force, this type of instruments can be used to measure AC or DC current, voltage, or its major application as a wattmeter for power measurement. In the first two cases, the moving and fixed are serially connected. For power measurement, one of the coils (usually the fixed coils) passes the load current and other coil passes a current proportional to the load voltage. Air friction damping is employed for these instruments and is provided by a pair of Aluminum-vanes attached to the spindle at the bottom. These vanes move in a sector shaped chamber. Cost and performance compared with the other types of instruments restrict the use of this design to AC or DC power measurement. Electro-dynamic meters are typically expensive but have the advantage of being more accurate than moving coil and moving iron instrument but its sensitivity is low. Similar to moving iron vane instruments, the electro dynamic instruments are true RMS responding meters. When electro dynamic instruments used for power measurement its scale is linear because it predicts the average power delivered to the load and it is calibrated in average values for AC. Voltage, current and power can all be measured if the fixed and moving coils are connected appropriately. Other parts of the instruments are described briefly below:

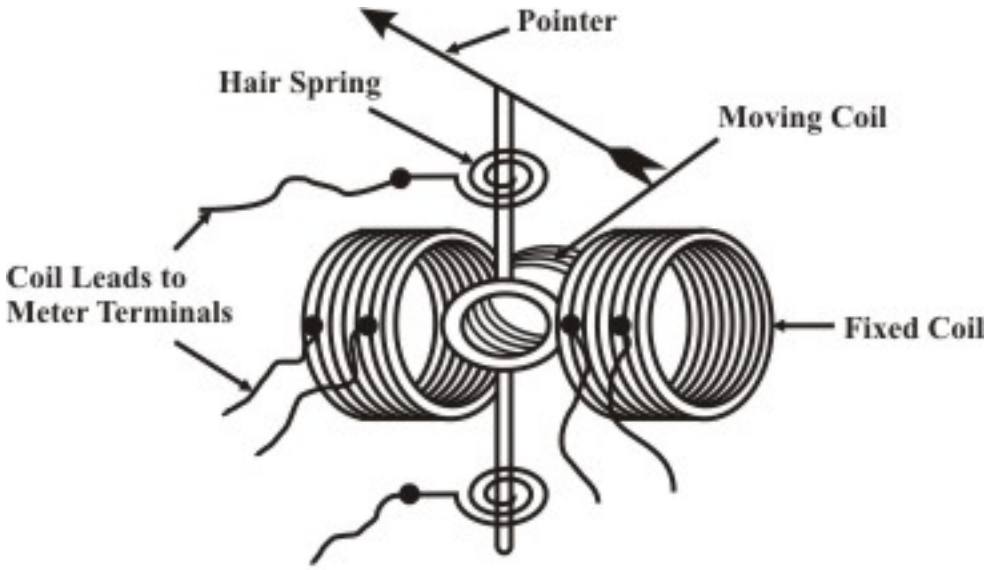

Fig. 43.1(a)

Electro dynamic (or Dynamometer) type Instruments:

Fixed coil: The magnetic field is produced by the fixed coil which is divided into two sections to give more uniform field near the centre and to allow passage of the instrument shaft.

Moving coil: The moving coil is wound either as a self-sustaining coil or else on a non-magnetic former. A metallic former cannot be used, as eddy currents would be induced in it by alternating field. Light but rigid construction is used for the moving coil. It should be noted that both fixed and moving coils are air cored.

Springs: The controlling torque is provided by two control springs. These hairsprings also act as leads of current to the moving coil.

Dampers: Air friction damping is employed for these instruments and is provided by a pair of Aluminum-vanes attached to the spindle at the bottom. These vanes move in a sector shaped chamber.

Shielding: Since the magnetic field produced by fixed coils is weaker than that in other types of instruments, these meters need a special magnetic shielding. Electro-dynamic instruments are effectively shielded from the effects of external magnetic fields by enclosing the mechanism in a laminated iron hollow cylinder with closed ends.

L.43.2 Operating Principle

Let us consider the currents in the fixed and moving coils are i_f and i_m respectively. The action of electrodynamic instrument depends upon the force exerted between fixed and moving coils carrying current. The flux density B (wb/m^2) produced by the fixed coil is proportional to i_f

(fixed coil current). The force on the conductors of the moving coil, for a given strength field, will proportional to i_m (moving coil current) and the number of turns 'N' of the moving coil. In case of ammeter and voltmeter fixed and moving coils are connected in series and the developed torque is due to the interaction of the magnetic fields produced by currents in the fixed and moving coils and thus it will be proportional to i^2 ($i_f = i_m = i$). Thus, dynamic instruments can be used for dc and ac measurements.

Expression for developed torque:

Case-a: Torque expression based on energy concept

Let us assume that the fixed and moving coils having self-inductances L_f and L_m respectively. Further it is assumed that the mutual inductance between the fixed and movable coils is M.

Total energy stored in the magnetic field of the coils is given by

$$W = \frac{1}{2} L_f\, i_f^2 + \frac{1}{2} L_m\, i_m^2 + M\, i_f\, i_m \tag{43.1}$$

where i_f and i_m are the currents through the fixed and moving coils. From equation (43.1) one can write the expression for torque developed as

$$T_d = \frac{dW}{d\theta} = i_f\, i_m \frac{dM}{d\theta} \tag{43.2}$$

Note L_f and L_m are not functions of θ but the mutual inductance 'M' between the coils is a function of the deflection θ (i.e relative position of moving coil). The equivalent inductance between fixed and moving coils can be found out as

$L_{eq} = L_f + L_m + 2M$ (cumulative manner) and from this one can find the mutual inductance between them as

$$M = \frac{1}{2}\left[L_{eq} - (L_f + L_m)\right]$$

With all deflection type instruments, however, the mutual inductance varies with the relative positions of the moving and fixed coils. The maximum value M_{max} of the mutual inductance occurs when the axes of the moving and fixed coils are aligned with θ = 180º, as this position gives the maximum flux linkage between coils. When θ = 0º, $M = -M_{max}$. If the plane of the moving coil is at an angle θ with the direction of B that produced by the fixed coil, then the mutual inductance M is expressed by

$$M = -M_{max} \cos\theta \tag{43.3}$$

D.C operation: Expression (43.2) for the developed torque is rewritten by setting $i_f = I_f(d.c)$ and $i_m = I_m(d.c)$

$$T_d = I_f\, I_m \frac{dM}{d\theta} = I_f\, I_m\, M_{max} \sin\theta \tag{43.4}$$

If the control is due to spiral springs, the controlling torque is proportional to the angle of deflection θ.

Controlling torque $T_c = k_s\,\theta$ (43.5)

where k_s is the spring constant.

Note that $T_d = T_c$ at steady deflection, i.e,

$$I_f I_m \frac{dM}{d\theta} = k_s\theta$$

$$\therefore \quad \theta = \frac{I_f I_m}{k_s}\left(\frac{dM}{d\theta}\right) \tag{43.6}$$

A.C operation: The dynamometer instrument is used to measure alternating current or voltage, the moving coil–due to its inertia takes up a position where the average deflecting torque over a complete cycle is balanced by the restoring torque of the spiral spring. The deflecting torque is proportional to the mean value of the square of the current or voltage (note both coils are connected in series for ammeters or voltmeters), and the instrument scale can therefore be calibrated to read r.m.s values of alternating current or voltage.

Average deflecting torque $T_{d,av} = \frac{1}{T}\int_0^T i_f(t)\, i_m(t)\frac{dM}{d\theta}dt$

Let $i_f(t) = I_{\max,f}\sin\omega t$, $i_m(t) = I_{\max.m}\sin(\omega t - \alpha)$ where 'α' is the phase–angle between two currents

$$T_{d,av} = I_1 I_2 \cos\alpha \frac{dM}{d\theta} \tag{43.7}$$

where I_1 and I_2 are the r.m.s values of fixed and moving coil currents. In steady state condition of deflection,

$$T_{d,av} = T_c$$

$$I_1 I_2 \cos\alpha \frac{dM}{d\theta} = k_s\theta$$

$$\therefore \quad \theta = \frac{I_1 I_2 \cos\alpha}{k_s}\frac{dM}{d\theta} \tag{43.8}$$

In case of ammeter or voltmeter, both the coils are connected in series and the same current is flowing through the coils. Equation (43.8) can be written as

$$\therefore \quad \theta = \frac{I^2}{k_s}\frac{dM}{d\theta} \tag{43.9}$$

where $I_1 = I_2 = I$ and $\alpha = 0^0$.

Case-b: Torque expression based on electro-magnetic force concept

Fig. 43.1(b) shows that the torque exerted in all electro-dynamic instruments depend upon the current i_m flowing through the moving coil and the magnetic flux density B which is directly proportional to the current i_f through the fixed coil.

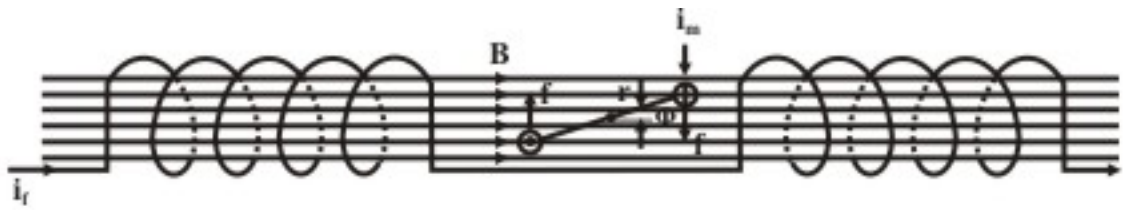

Fig. 43.1(b): Magnetic - field and torque developed in moving coil of an electro dynamoter.

The torque acting upon the moving coil can be easily calculated if the flux density B is assumed constant throughout the space occupied by the moving coil.

Consider the length of the coil is l and the width is $'2r'$, then when a current i_m flows through it, the force acting on the top portion of the moving coil of N turns is $f = N\,B\,l\,i_m$ and hence the resulting torque T_d is $f = 2N\,B\,l\,i_m r$. If the plane of the moving coil is at an angle ϕ with the direction of B, then resulting clockwise torque developed on the moving coil is given by

$$T_d = 2\,N\,B\,l\,i_m\,r\cos\phi = 2\,N\,k_f i_f\,l\,i_m\,r\cos\phi$$

where, the flux density B is directly proportion to the fixed coil current i.e $B = k_f i_f$. At steady state condition of deflection, the resulting torque T_d developed by the moving coil is balanced by the spring restraining torque $T_c = k_s\,\theta$, one can obtain the following relationship.

$$T_d = 2\,N\,k_f\,i_f\,l\,i_m\,r\cos\phi = k_s\,\theta \;\Rightarrow \theta = \left(2\,N\frac{k_f}{k_s}\,l\,r\cos\phi\right) i_f\,i_m$$

We see that the angle of deflection θ depends on the product of the moving coil current i_m and the fixed coil current i_f. When the both coils carry alternating currents, say $i_f = i_{\max,f}\cos\left(wt+\alpha_1\right)$ *and* $i_m = i_{\max,m}\cos\left(wt+\alpha_2\right)$, the average value of deflection-angle θ expression has the form

$$\theta = k_\phi\,I_{\max,f}\,I_{\max,m}\cos\alpha$$

where the value of $k_\phi\left(= N\frac{k_f}{k_s}\,l\,r\cos\phi\right)$ varies as the value of ϕ varies. Note that the average value of the product of two instantaneous current signals is expressed as $I_{\max,f}\,I_{\max,m}\cos\alpha$ where $\alpha = \alpha_1 - \alpha_2$.

L.43.2.1 More about ammeters

Ammeters

Fig. 43.2(a) shows that fixed coils and moving coil of a dynamometer instrument connected in series and assumed the current through moving coil does not exceed a certain the upper limit depending on its construction.

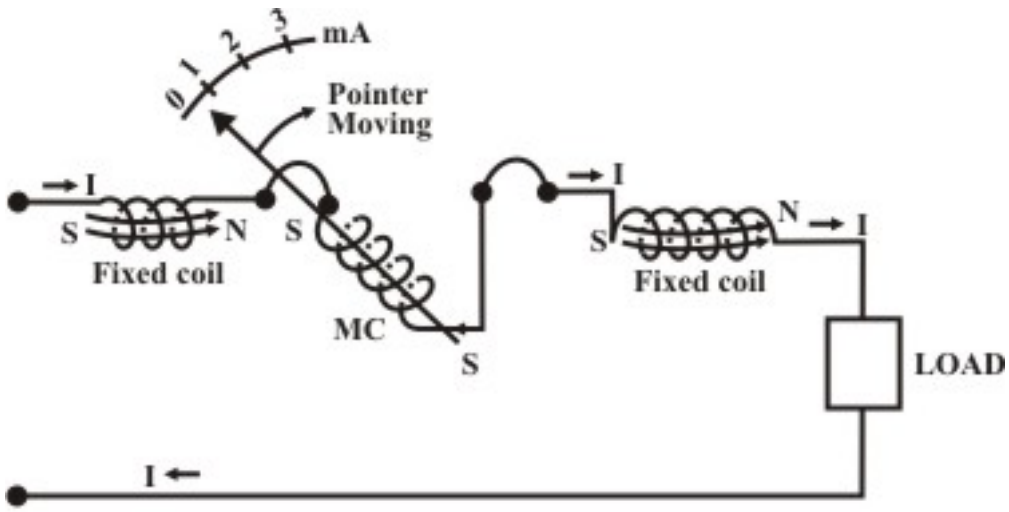

Fig. 43.2(a): Torque produces positive deflection (clockwise)

The flux direction through the fixed and movable coils due to current is shown in Fig. 43.2 (a). it can be noted that the N –pole of the moving coil flux is reflected from the adjacent N –pole of the fixed coil and on the other side adjacent S –poles are also repelled each other. This results the pointer to move clockwise direction from 'zero position' to a steady position depending upon the magnitude of current flowing through the coils. Fig.43.2(b) illustrate the effect of reversing the direction of the current through the coils and shows that the deflecting torque produces movement of the pointer in the same direction. This means that the dynamometer instrument suitable for both dc and ac measurements of current and voltage. The dynamic instrument when uses as a voltmeter, the fixed coils wounded with thin wire are connected in series with the moving coil and a non-inductive resistance (see Fig.43.5). For ammeter application the fixed coils are connected in parallel with the moving coil, and in parallel with a shunt, as required (see Fig.43.4).

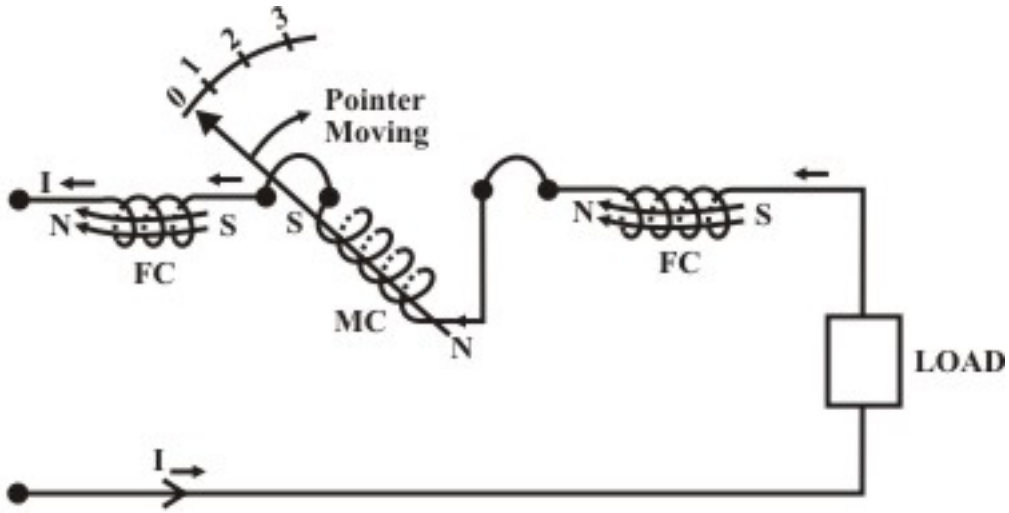

Fig. 43.2(b): Current flowing right to left produces positive deflection again.

Remarks: The scale of the instrument can be conveniently calibrated on dc and then used to measure ac.

L.43.2.2 Ranges of Ammeters and Voltmeters

Ammeters

A given size of instruments requires a definite number of ampere-turns to be supplied by the fixed and moving coils to obtain a full–scale deflection. Ammeter ranges are altered by changing the number of turns and size of conductor in the fixed and moving coils. A double range instrument may easily be obtained by connecting different coil sections either in series or in parallel. The internal connections are shown in Fig.43.3. The maximum range for which ammeters are usually constructed is dependent on its application. For ammeter use in which only fraction of rated current (say 200 ma) is carried by the moving coil to alter its range by changing the mode of connection of the fixed coils.

Voltmeters: With voltmeters the ranges is altered by changing the number of turns in the coils and the value of series resistances, but the range of a given instrument may be increased by connecting additional resistances in series with it. For example, the range of a given voltmeter may be doubled while connecting in series with it a non–inductive resistance equal in value to the original resistance of the instrument.

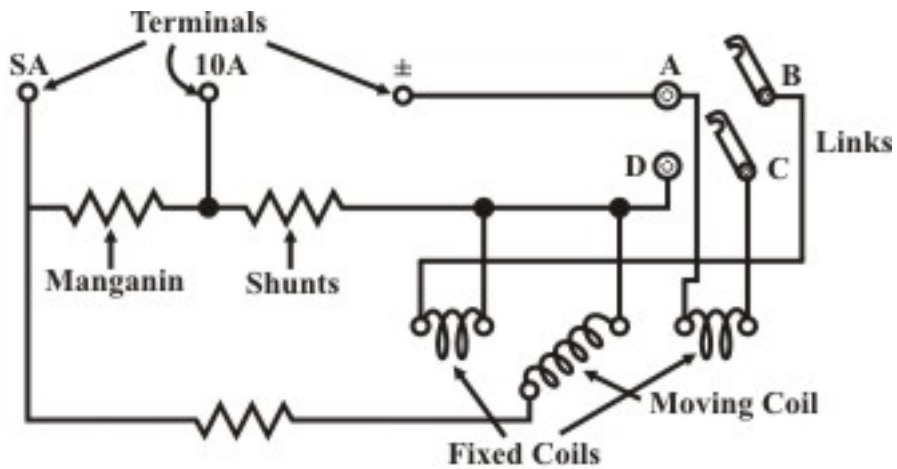

Fig. 43.3: Connections of double-range electro-dynamic ammeter. (For higher range, Fixed coils are in parallel; for lower range, fixed coils are in series).

L. 43.3 Connections for ammeter, voltmeter and wattmeter

Ammeter

When ammeters for ranges above about 250 mA, the moving coil cannot be connected in series with the fixed coil (note the control spring is unsuitable for currents above about 250 mA). Therefore, the moving coil must be connected in parallel with the fixed coils as shown in Fig 43.4.

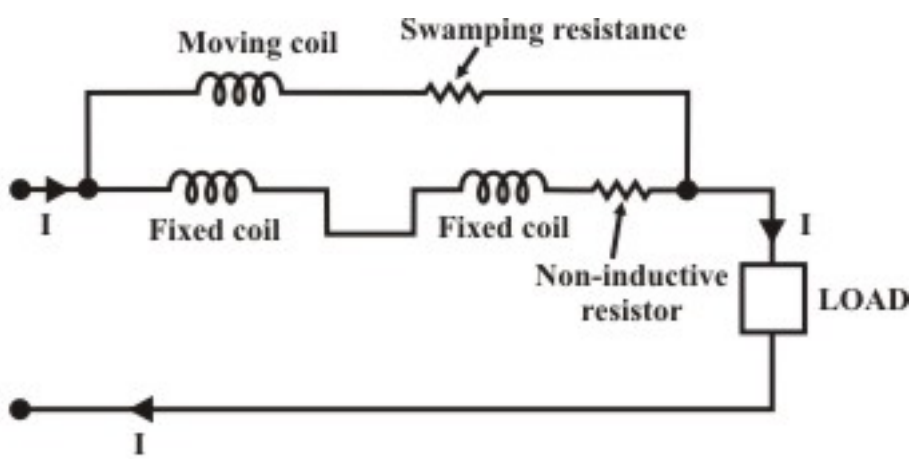

Fig. 43.4: Electro dynamic Ammeter (above 250mA) connection

Here the moving coil current is kept within 200 mA and the rest of current is passed through the fixed coil. Moving coil carries a small fraction of measured current through the moving coil. For extreme accuracy the connection shown in Fig. 43.4 must fulfill the following conditions.

- The resistance/reactance ratio must have the same value (i.e time constant of moving coil = time constant of fixed coil) for each branch.

- The percentage change of resistance with temperature must be the same for the two branches.

Voltmeters: The connection for use as a voltmeter is shown in Fig. 43.5, in which fixed and moving coils are connected in series with a high series resistance having "zero resistivity co-efficients".

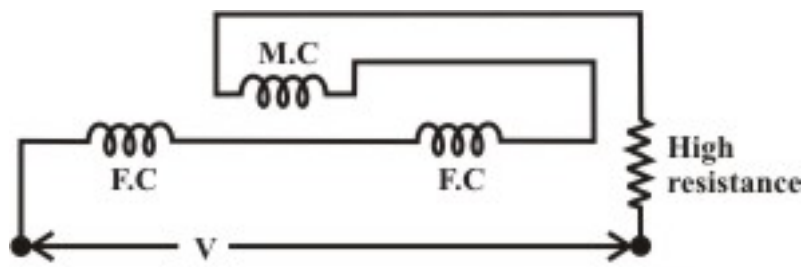

Fig. 43.5: Electro-dynamic voltmeter connection

This combination is connected across the voltage source or across the load terminals whose voltage is to be measured. The deflecting torque is given by

$$T_d = i_f\, i_m \frac{dM}{d\theta} = \frac{V}{Z}\frac{V}{Z}\frac{dM}{d\theta}$$

where Z is the magnitude of total impedance of the voltmeter circuit. At steady state condition of deflection

$$T_d = T_c$$

$$\therefore \quad k_s\theta = \frac{V^2}{Z^2}\frac{dM}{d\theta}$$

$$\therefore \quad \theta = \frac{V^2}{Z^2 k_s}\frac{dM}{d\theta} \qquad (43.10)$$

This implies that deflecting torque is directly proportional to V^2 if $\frac{dM}{d\theta}$ is kept nearly constant. This is possible if θ varies from 45º to 135º over the range of instrument scale.

Remarks: Electro-dynamic meter's use is much more common for ac voltmeters than for ac ammeters because of practical limitation on the current through the moving coil. Electro-dynamic ammeter needs to read r.m.s values of alternating current accurately irrespective of signal waveform or distortion of signal waveform.

Wattmeter: Perhaps the most important use of the electrodynamometer is for the wattmeter. The mechanism of electro dynamic wattmeter closely resembles that of an electro-dynamic ammeter, but the moving coil of wattmeter is connected in series with a high non–inductive resistance. It provides with separate terminals to connect across the load terminals. The fixed coil is connected in series with the load to have the same load current. A typical connection of an electrodynamometer for use as a wattmeter is shown in Fig. 43.6.

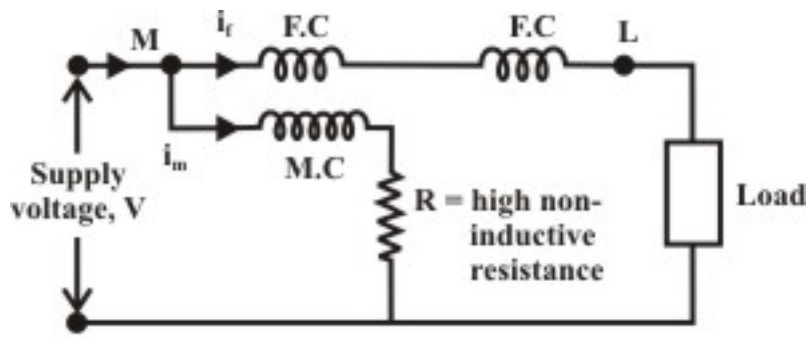

Fig. 43.6: Wattmeter Connection

For a d.c circuit, the fixed coil current $i_f = I_L$ is the load current, and the moving–coil current i_2 has a value V/R. The deflecting torque in a d.c circuit is proportional to the power and it is given by

$$\theta \propto i_f\, i_m \frac{dM}{d\theta}$$

or

$$\theta \propto I_L \frac{V}{R} \frac{dM}{d\theta}$$

$$\propto \text{ power } \left(\text{if } \frac{dM}{d\theta} \text{ is nearly constant} \right).$$

For a.c circuit: Let the applied voltage $v(t) = V_m \sin \omega t$; and the currents through the moving and fixed coils are given by

$$i_m(t) = \frac{V_m}{R} \sin \omega t \text{ (assuming inductance of moving coil is negligible)}$$

$$i_f(t) = i_L(t) = I_m \sin(\omega \pm \phi)$$

where ϕ is the power factor angle of the load ($+\phi$ leading p.f of the load and $-\phi$ for lagging p.f of the load).

Instantaneous deflecting torque

$$T_d(t) \propto i_f(t)\, i_m(t) \frac{dM}{dt} \propto V_m\, I_m \sin\omega t \sin(\omega t \pm \phi) \tag{43.11}$$

The mean or average torque

$$T_{d,av} \propto \frac{1}{T} \int_0^T V_m\, I_m \sin\omega t \sin(\omega t \pm \phi) dt$$

$$\propto V\, I \cos\phi \tag{43.12}$$

where V and I are the r.m.s values of load voltage and current respectively. It may be noted that the developed torque must be equal to the controlling torque at steady state. In other words, the controlling torque $T_c \propto \theta$ and this implies that $\theta \propto$ power (average). Thus an electro-dynamic instrument, connected as shown in Fig. 43.6, becomes a wattmeter which will give a direct deflection of the power in either dc or ac circuit.

Remarks:

- The moving coil is usually called the voltage coil (or pressure coil) and carries a small current proportional to voltage across the coil.
- The fixed coils are called the current coils and will carry load current.
- The terminal 'M' is connected to the source side where as the terminal 'L' is connected to the load side.

Wattmeter Errors:

A wattmeter is normally required to measure power in the load. Two modes of wattmeter connections to the load are shown in Fig. 43.7(a) and Fig.43.7(b). For the connection shown in Fig. 43.7(a), the power supplied by the source to load = $VI\cos\phi$ where ϕ is the load power factor.

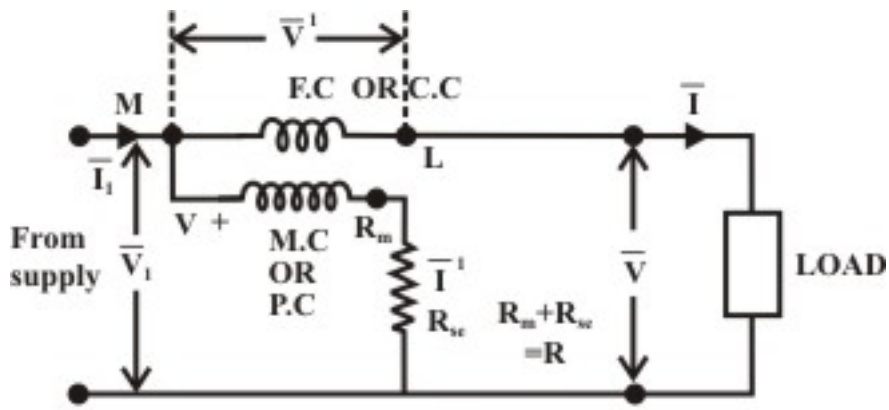

Fig. 43.7(a)

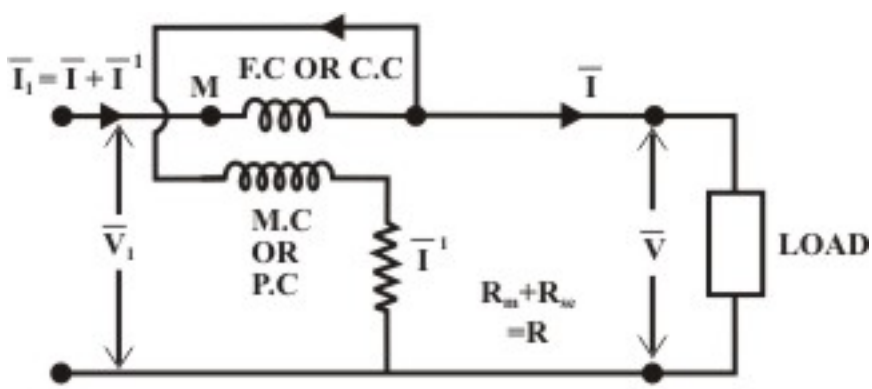

Fig. 43.7(b)

Refer to Fig.43.7(a), and let us study the reading of the wattmeter and its is expressed as

$$\text{Wattmeter reading} = V_1\, I\cos(\angle\overline{V}_1, \angle\overline{I}) = V_1\, I\cos\theta = (V_1\cos\theta)I$$

$$= (V\cos\phi + V')I \quad \text{(see phasor diagram)}$$

$$= VI\cos\phi + V'I = VI\cos\phi + I.r.I = VI\cos\phi + I^2 r \qquad (43.13)$$

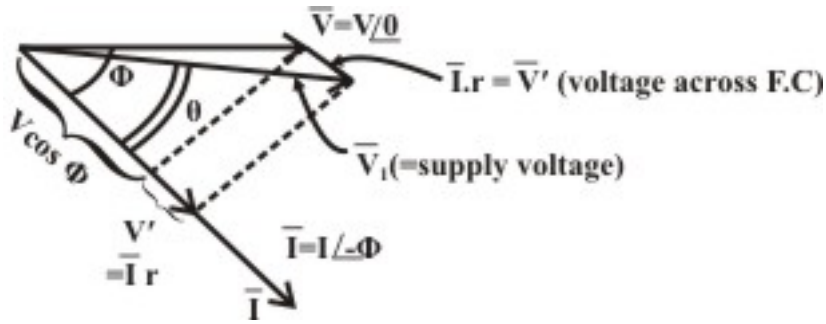

where V' is the magnitude voltage across the current coil or fixed coil.

Equation (43.13) shows that the wattmeter reading is equal to the sum of power consumed in the load ($VI\cos\phi$) + power loss (I^2r) in the fixed coil of resistance 'r' Ω.
If the connections are those of Fig. 43.7(b) the total current $\bar{I}_1$ through the current coil will be the vector sum of the load current $\bar{I}$ and the voltage coil or pressure coil or moving coil $\bar{I}'$ ($I = \frac{V}{R}$ where R is the resistance of the voltage coil). The wattmeter reading corresponding to the circuit configuration Fig. 43.7(b) is given by

$$\begin{aligned}\text{Wattmeter reading} &= V\,I_1\cos(\angle\bar{V}, \angle\bar{I}_1) = V\,I_1\cos\theta \\ &= V(I\cos\phi + I') = VI\cos\phi + VI' \\ &= VI\cos\phi + V\frac{V}{R} = VI\cos\phi + \frac{V^2}{R} \qquad (43.14) \\ &= \text{Power in load + Power in voltage coil.}\end{aligned}$$

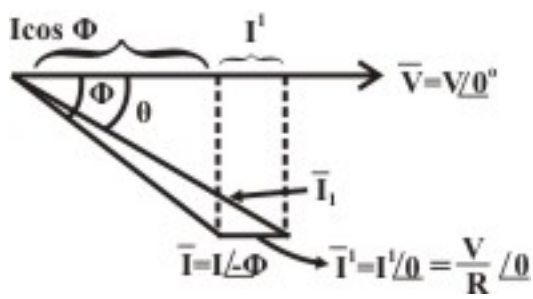

These results can be also applied in d.c circuits; the verification of this is simple, as phase angles are not involved.

Remarks:

- Losses $\left(I^2r \text{ or } \frac{V^2}{R}\right)$ are normally small in instrument–circuit.
- Normally the connection Fig. 43.7(a) is better, but under some heavy load current conditions the wattmeter circuit configuration Fig 43.7(b) is preferable.

How to Compensate Wattmeter Error?

The error involves in wattmeter reading with the circuit configuration Fig 43.7(b) can easily be eliminated by introducing double–wound current coil. One conductor being the current coil as usual. The additional conductor is an internal connection, corresponding to the lead from L to V^+ of Fig. 43.8(a), which carries the voltage–coil current in a reverse direction through the winding.

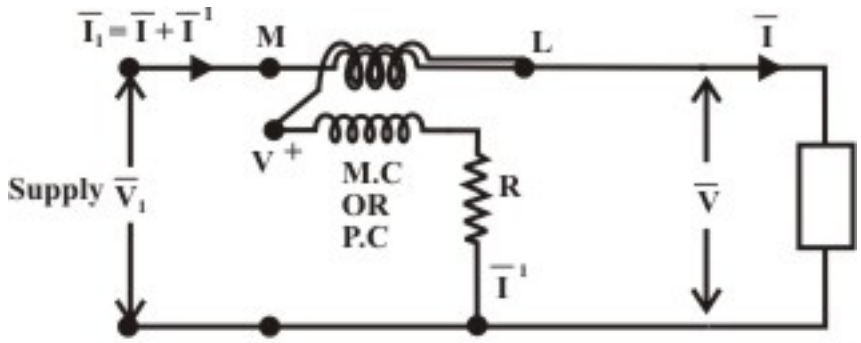

Fig. 43.8(a): Compensated wattmeter

Thus any extra torque due to the voltage–coil current in the current coil itself is neutralized by the torque due to the voltage–coil current in the additional winding.

Note: (i) There are watt-meters, that directly read the power consumed by the load P_L. In such a meter, the moving–coil (voltage coil) current goes through an additional fixed coil located so as to cancel the effect of I on the current in the fixed coil.
(ii) The input terminals of each coil (fixed and moving coils) is identified as $\pm$ sign as shown in Fig.43.8(b). The marked $\pm$ terminal of the current coil should be connected to the incoming line or to the source side and the voltage coil marked $\pm$ terminal should be connected to the positive side of the load. With the wattmeter terminal connection specified, the meter will read up-scale when power is delivered to the load. If one of the coils is connected in reverse polarity (backwards), the wattmeter will drive downscale and may be damaged. To get, up-scale reading of watt-meters, the current coil connection should be reversed.

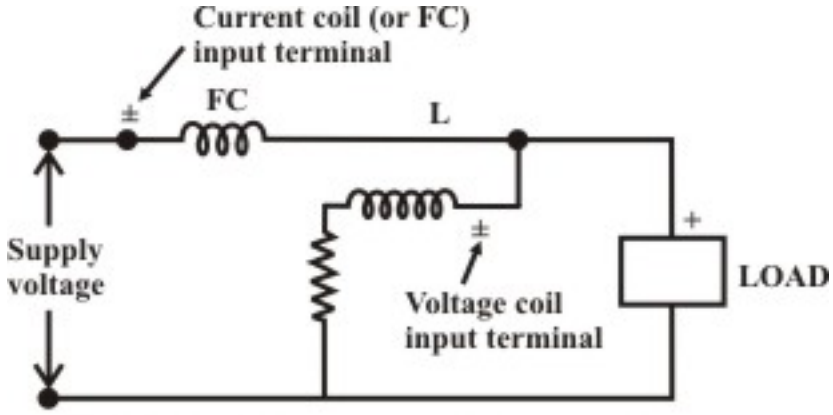

Fig. 43.8(b): Wattmeter terminal connection

L.43.4 Inductance of Voltage–Coil Introduces an Error in Wattmeter

Let us consider the wattmeter connection as shown in Fig. 43.7(b). The mean torque of an electro-dynamic instrument is proportional to the mean value of the product $i_1 \; i_2$, where i_1 and i_2 being instantaneous values of the two currents. It may also be said that the mean torque is proportional to

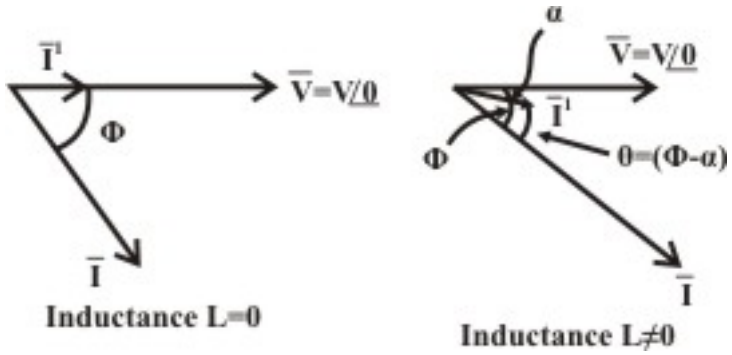

$I_1 I_2 \cos\theta$, where I_1 and I_2 are r.m.s values and θ the phase angle between the two currents (pressure coil current and current coil current). The current through moving coil $I = \dfrac{V}{R}$, is in the same phase as that of load voltage, where R is the resistance of a non–inductive voltage–coil circuit. Then $\theta = \phi$, load phase angle.

Instantaneous Torque Expression (neglecting inductance of voltage coil or moving coil):-

$$T_{inst} = \frac{V_m \sin\omega t}{R} I_m \sin(\omega t - \phi)\frac{dM}{d\theta}$$

$$T_{av} = \frac{1}{RT}\left[\int_0^T \frac{V_m I_m}{2} 2\sin\omega t \sin(\omega t - \phi)dt\right]\frac{dM}{d\theta}$$

$$= \frac{1}{RT} VI\left[\int_0^T \left[\cos(\phi) - \cos(2\omega t - \phi)dt\right]\right]\frac{dM}{d\theta}$$

$$= \frac{VI}{RT}\left[\cos\phi\right]_0^T = \frac{VI}{R}\cos\phi\frac{dM}{d\theta} \qquad (43.15)$$

In practice, the voltage–coil must posses some inductances; at a given frequency, let the resulting reactance be $X_L = \omega L$.

The instantaneous current through the voltage

$$i'(t) = \frac{V_m \sin(\omega t - \alpha)}{\sqrt{R^2 + (\omega L)^2}} \qquad \text{where } \alpha = \tan^{-1}\frac{\omega L}{R}$$

where v(t) = $V_m \sin\omega t$ = voltage across the load.

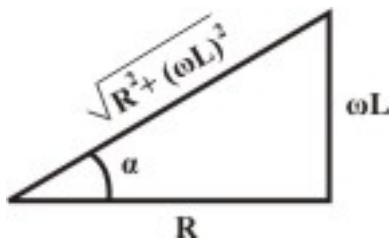

$$T_{instantaneous}(t) = I_m \sin(\omega t - \phi)\frac{V_m \sin(\omega t - \alpha)}{\sqrt{R^2 + (\omega L)^2}}\frac{dM}{d\theta}$$

$$= \frac{V_m I_m}{\sqrt{R^2 + (\omega L)^2}} \sin(\omega t - \phi)\sin(\omega t - \alpha)\frac{dM}{d\theta}$$

$$T_{av} = \frac{1}{T}\int_0^T \frac{V_m I_m}{\sqrt{R^2 + (\omega L)^2}} \sin(\omega t - \phi)\sin(\omega t - \alpha)\frac{dM}{d\theta}dt$$

$$= \frac{VI}{\sqrt{R^2 + (\omega L)^2}} \cos(\phi - \alpha)\frac{dM}{d\theta}$$

$$= \frac{VI}{R}\cos\alpha\cos(\phi - \alpha)\frac{dM}{d\theta} \qquad (43.16)$$

Comparison of equations (43.15) and (43.16) shows that the correction factor by which the deflection must be multiplied is $\frac{\cos\phi}{\cos\alpha\cos(\phi - \alpha)}$.

Remarks:

- As α is very small, it is usually sufficiently accurate to take the correction factor as (i) $\frac{\cos\phi}{\cos(\phi - \alpha)}$ (43.17)

  for lagging power factor of the load. (ii) $\frac{\cos\phi}{\cos(\phi + \alpha)}$ for leading power factor of the load.
- The effect of inductance in the moving coil circuit is to cause the wattmeter to read high on **lagging power factor** (see the equation (43.16)).
- For **leading power factor** the wattmeter will read low.
- Correction factor is zero at load of unity power factor.

L43.5 Advantages and disadvantages of electro-dynamic instruments

Advantages:

i Free from hysteresis and eddy current errors.
ii Applicable to both dc and ac circuits.
iii Precision grade accuracy for 40 Hz to 500 Hz.
iv Electro-dynamic voltmeters give accurate r.m.s values of voltage irrespective of waveforms.

Disadvantages:

i Low torque/weight ratio, hence more frictional errors.
ii More expensive than PMMC or MI instruments.
iii Power consumption higher than PMMC but less than MI instruments.

For these reasons, dynamometer ammeters and voltmeters are not in common use (except for calibration purpose) especially in dc circuits. The most important application of the dynamometer type instruments used as dynamometer wattmeter.

L43.6 Test your Understanding

Marks: 50

T.1 Derive an expression for the torque on a dynamometer ammeter in terms of the currents in the coils and the rate of change of mutual inductance with deflection. [10]

T.2 A dynamometer wattmeter is connected with the voltage coil on the supply side of the current coil. Derive an expression for a correction factor to allow for the inductance of voltage coil. Calculate the correction factor of the wattmeter if the phase angle of the voltage coil is 1° and the power factor of the load is (i) 0.8 lagging(ii) 0.8 leading. [8]

[Answer: (i) 0.987, (ii) 1.013.]

T.3 An electro dynamic wattmeter is used to measure the power consumed by the load. The load voltage is 250 v and the load current is 10A at a lagging power factor of 0.5. The wattmeter voltage circuit has a resistance of 2000 Ω and inductance 40 mH. The voltage coil (moving coil) is connected directly across the load. Estimate the percentage error in the wattmeter reading. (Assume the supply frequency = 50 HZ) [8]

(Answer: 0.2% high)

T.4 A dynamometer ammeter is arranged so that $1/100^{th}$ of the total current passes through the moving coil and the remainder through the fixed coil. The mutual inductances between the two coils varies with the angle of displacement of the moving coil from its zero position as indicated below:

θ	0	15°	30°	60°	90°	105°	120°
M(μH)	-336	-275	-192	0	192	275	336

If a torque of $1.05\times10^{-5}\ N-m$ is required to give a full-scale deflection of 120°, calculate the current at half and full-scale deflection. [12]

(Answer: 1.187A, 2.46A)

T.5 A voltmeter has a range of 120 volts and a resistance of 1550 Ω at 20°C, of which 77 Ω is due to the resistances of fixed and moving coils and the remainder 1473 Ω for non-inductive resistance connected to the moving coil. The inductances of the instrument (measured at 50 Hz) for number of position of the moving system are given in Table. When voltmeter used on a 100 volt dc circuit and 50 Hz, 100 volt a.c. circuit.

Applied voltage	0	40	60	80	100	120
Angular deflection	0	7	13.8	24	37.1	54
Inductance (mH)	70.1	72.5	74.8	78.3	82.8	88.6

The inductance of the fixed coil is 74.5 mH and moving coil is 2.2 mH.
Calculate (i) Mutual inductance between fixed and moving coils against applied voltage using above data

(ii) Plot mutual inductances against angular deflection and comments on $\frac{dM}{d\theta}$.

(iii) Power loss in the instrument. [6+3+3]

Answer: (i)

Applied voltage	0	40	60	80	100	120
Mutual inductance (mH)	-3.3	-2.1	-0.95	0.8	3.05	5.95

(ii) $\frac{dM}{d\theta}$ is constant.
(iii) 6.45 watts.

Module 10

Measuring Instruments

Lesson 44

Study of Single Phase Induction Type Energy Meter or Watt-hour Meter

Objectives

- To understand the basic construction and different components of a single phase induction type energy meter.
- Explain basic principle and development of torque expressions for energy meter.
- To study the errors involve in the energy meter.
- Use of instrument transformers for extension of Instrument range.
- Understanding the basic theory of shielded-pole shunt magnet.

L.44.1 Introduction

An instrument that is used to measure either quantity of electricity or energy, over a period of time is known as energy meter or watt-hour meter. In other words, energy is the total power delivered or consumed over an interval of time t may be expressed as:

$$W = \int_0^t v(t)\, i(t)\, dt$$

If $v(t)$ is expressed in volts, $i(t)$ in amperes and t in seconds, the unit of energy is joule or watt second. The commercial unit of electrical energy is kilowatt hour (KWh). For measurement of energy in a.c. circuit, the meter used is based on "electro-magnetic induction" principle. They are known as induction type instruments. The measurement of energy is based on the induction principle is particularly suitable for industrial or domestic meters on the account of lightness and robustness of the rotating element. Moreover, because of smallness of the variations of voltage and frequency in supply voltage, the accuracy of the induction meter is unaffected by such variations. If the waveform of the supply is badly distorted, the accuracy, however, is affected. Basically, the induction energy meter may be derived from the induction watt-meter by substituting for the spring control and pointer an eddy current brake and a counting train, respectively. For the meter to read correctly, the speed of the moving system must be proportional to the power in the circuit in which the meter is connected.

L.44.2 Construction of induction type energy meter

Induction type energy meter essentially consists of following components

(a) Driving system (b) Moving system (c) Braking system and (d) Registering system.

- Driving system: The construction of the electro magnet system is shown in Fig. 44.1(a) and it consists of two electromagnets, called "shunt" magnet and "series" magnet, of laminated construction.

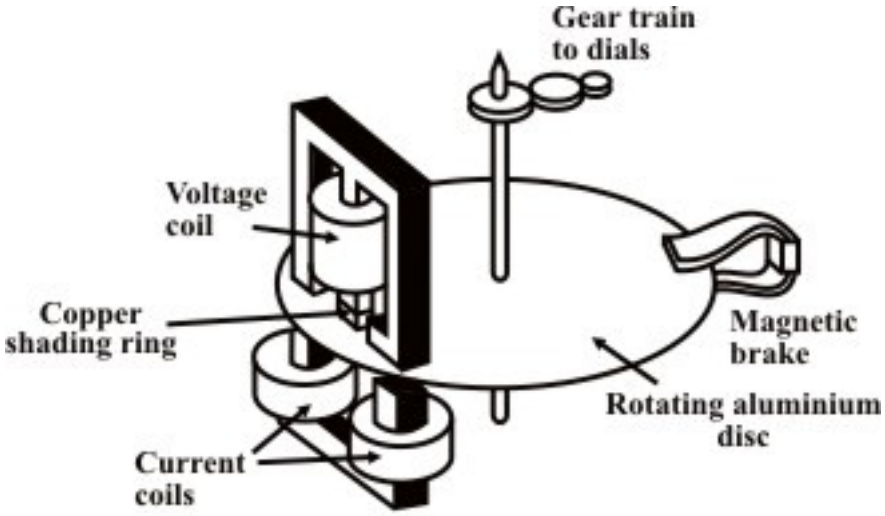

Fig. 44.1(a): Watt-hour meter.

A coil having large number of turns of fine wire is wound on the middle limb of the shunt magnet. This coil is known as "pressure or voltage" coil and is connected across the supply mains. This voltage coil has many turns and is arranged to be as highly inductive as possible. In other words, the voltage coil produces a high ratio of inductance to resistance. This causes the current, and therefore the flux, to lag the supply voltage by nearly 90^0. An adjustable copper shading rings are provided on the central limb of the shunt magnet to make the phase angle displacement between magnetic field set up by shunt magnet and supply voltage is approximately 90^0. The copper shading bands are also called the power factor compensator or compensating loop. The series electromagnet is energized by a coil, known as "current" coil which is connected in series with the load so that it carry the load current. The flux produced by this magnet is proportional to, and in phase with the load current.

- Moving system: The moving system essentially consists of a light rotating aluminium disk mounted on a vertical spindle or shaft. The

shaft that supports the aluminium disk is connected by a gear arrangement to the clock mechanism on the front of the meter to provide information that consumed energy by the load. The time varying (sinusoidal) fluxes produced by shunt and series magnet induce eddy currents in the aluminium disc. The interaction between these two magnetic fields and eddy currents set up a driving torque in the disc. The number of rotations of the disk is therefore proportional to the energy consumed by the load in a certain time interval and is commonly measured in killowatt-hours (Kwh).

- Braking system: Damping of the disk is provided by a small permanent magnet, located diametrically opposite to the a.c magnets. The disk passes between the magnet gaps. The movement of rotating disc through the magnetic field crossing the air gap sets up eddy currents in the disc that reacts with the magnetic field and exerts a braking torque. By changing the position of the brake magnet or diverting some of the flux there form, the speed of the rotating disc can be controlled.

- Registering or Counting system: The registering or counting system essentially consists of gear train, driven either by worm or pinion gear on the disc shaft, which turns pointers that indicate on dials the number of times the disc has turned. The energy meter thus determines and adds together or integrates all the instantaneous power values so that total energy used over a period is thus known. Therefore, this type of meter is also called an “integrating” meter.

L44.2 Basic operation

Induction instruments operate in alternating-current circuits and they are useful only when the frequency and the supply voltage are approximately constant. The most commonly used technique is the shaded pole induction watt-hour meter, shown in fig.44.1 (b).

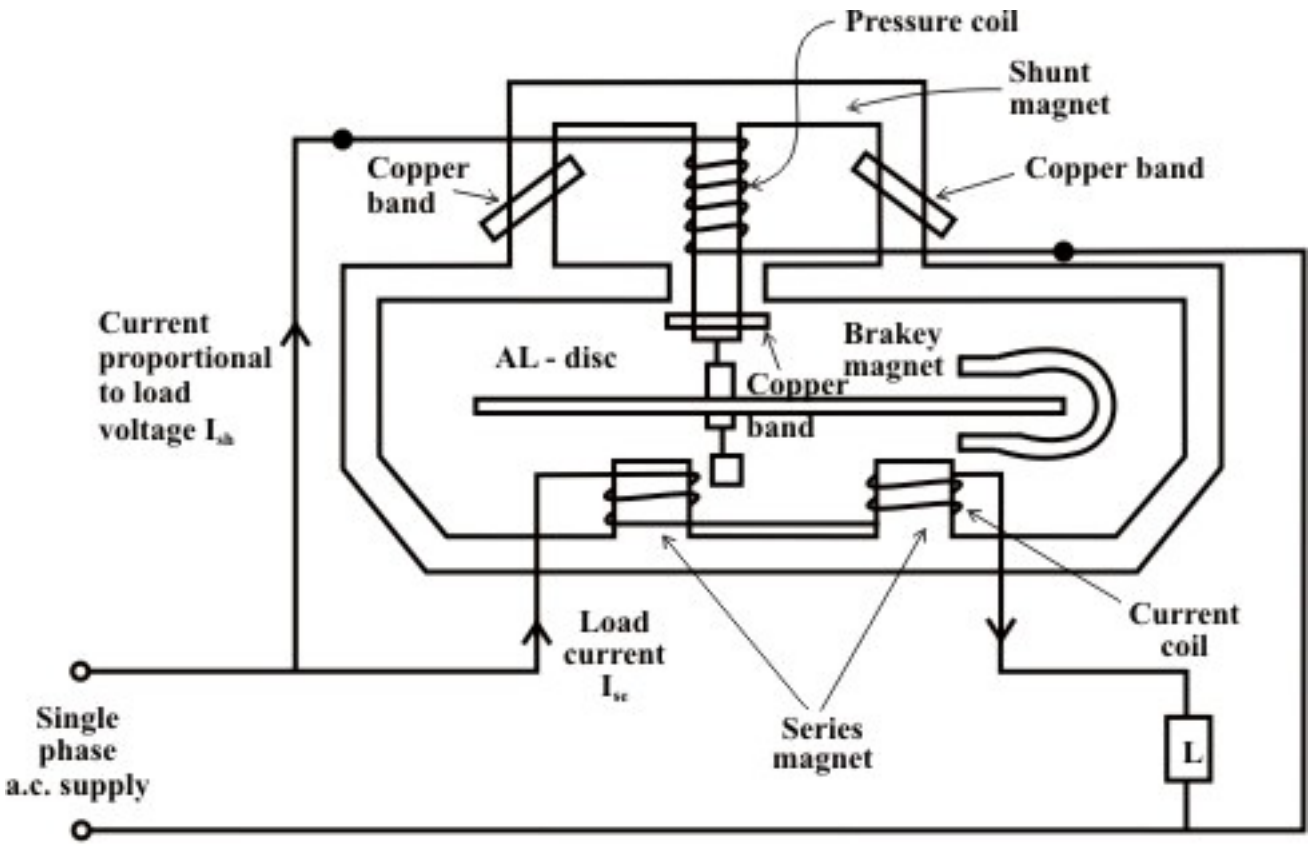

Fig. 44.1(b)

The rotating element is an aluminium disc, and the torque is produced by the interaction of eddy currents generated in the disc with the imposed magnetic fields that are produced by the voltage and current coils of the energy meter.

Let us consider a sinusoidal flux $\phi(t)$ is acting perpendicularly to the plane of the aluminium disc, the direction of eddy current i_e by Lenz's law is indicated in figure Fig.44.2. It is now quite important to investigate whether any torque will develope in aluminium disc by interaction of a sinusoidally varying flux $\phi(t)$ and the eddy currents i_e induced by itself.

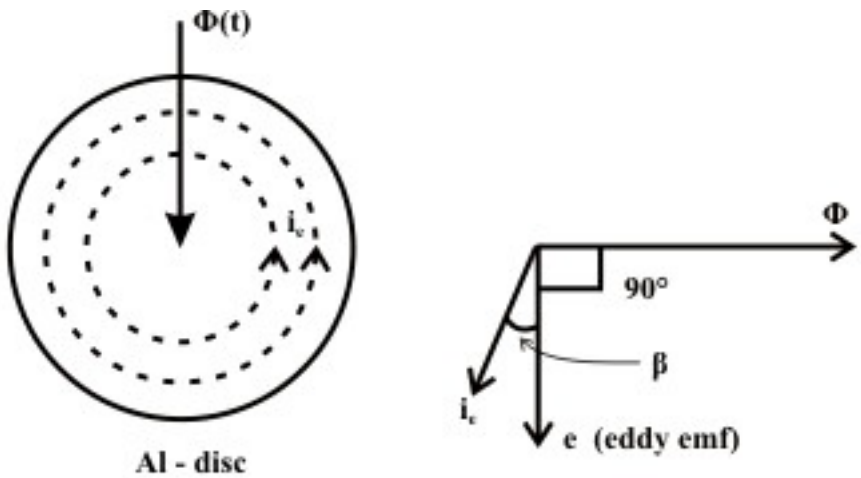

Fig. 44.2: Eddy currents in aluminium disc due to time-varying flux.

$$\begin{aligned} T_{d(av.)} &\propto \phi\, I_e \cos\left(\angle\phi, I_e\right) = \phi\, I_e \cos(90^0 + \beta) \\ &\propto \phi\, I_e \sin(\beta) \simeq 0 \end{aligned} \tag{44.1}$$

where ϕ and I_e are expressed in r.m.s and $\beta \simeq 0$ (because the reactance of the aluminium disc is nearly equal to zero). Therefore, the interaction of a sinusoidally varying flux $\phi(t)$ and its own eddy current i_e (induced) cannot produce torque any on the disc.

So in all induction instruments we have two fluxes produce by currents flowing in the windings of the instrument. These fluxes are alternating in nature and so they induce emfs in a aluminium disc or a drum provided for the purpose. These emfs in turn circulate eddy currents in the disc.

As in an energy meter instrument, we have two fluxes and two eddy currents and therefore two torques are produced by

i) first flux(ϕ_1) interacting with the eddy currents (I_{e2}) generated by the second flux(ϕ_2), and

ii) second flux (ϕ_2) interacting with the eddy currents (I_{e1}) induced by the first flux (ϕ_1).

In the induction type single phase energy meter, the flux produced by shunt magnet (pressure or voltage coil current) Φ_{sh} lags behind the applied voltage V by almost 90°. The flux ϕ_{se} is produced by the load current I and Φ_{se} is in the direction of I (see Fig.44.3).

Let the supply voltage $v(t) = V_{\max} \sin(\omega t)$ and load current $i(t) = I_{\max} \sin(\omega t - \theta)$.

So, the fluxes are :

(i) Flux generated by current coil

$$\Phi_{se} = k\, I_{\max} \sin(\omega t - \theta) = \Phi_{\max(se)} \sin(\omega t - \theta)$$

(ii) Flux generated by voltage coil

$$\Phi_{sh} = k' \int v(t)dt$$

$$= -k' \frac{V_{\max}}{\omega} \cos(\omega t) = \Phi_{\max(sh)} \sin(\omega t - 90^0)$$

(note: $v(t) = \frac{1}{k'} \frac{d(\Phi_{sh})}{dt}$ and k and k' are constants.)

The eddy e.m.f , induced by flux Φ_{se} is

$$e_{\text{se}} \propto -\frac{\text{d}}{\text{dt}}(\Phi_{\text{se}}) = -k\, I_{\max}\, \omega \cos(\omega t)$$

Eddy current generated in disc by the current coil

$$i_{se} \propto -\frac{k}{Z} I_{\max}\, \omega \cos(\omega t - \theta - \alpha) = \frac{k}{Z} I_{\max}\, \omega \sin(\omega t - (\theta + \alpha + 90^0)),$$

where Z is the eddy current path impedance and α is the phase angle. In general, the angle $\alpha = \tan^{-1} \frac{X}{R}$ is negligible because $X \simeq 0$.

Also, note that

$$e_{\text{sh}} \propto -\frac{\text{d}}{\text{dt}}(\phi_{\text{sh}}) = -k' \frac{V_{\max}}{\omega} \omega \sin(\omega t)$$

Eddy current generated in disc by the voltage coil

$$i_{sh} \propto -k' \frac{V_{\max}}{Z} \sin(\omega t - \alpha) = k' \frac{V_{\max}}{Z} \sin(\omega t + (180^0 - \alpha))$$

The instantaneous torque on the disc is then proportional to

$$(\Phi_{sh}\, i_{se} - \Phi_{se}\, i_{sh}) = \frac{k\,k'}{Z} V_{\max}\, I_{\max} \left(\cos(\omega t) \cos(\omega t - \theta - \alpha) - \sin(\omega t - \theta) \sin(\omega t - \alpha)\right) \tag{44.2}$$

where Φ_{sh} is the flux generated by the voltage coil, Φ_{se} is flux generated by the current coil, i_{sh} is the eddy current produced in the disc by the voltage coil, and i_{se} is the eddy current produced in the disc by the current coil. The relative phases of these quantities are shown in fig.44.3.

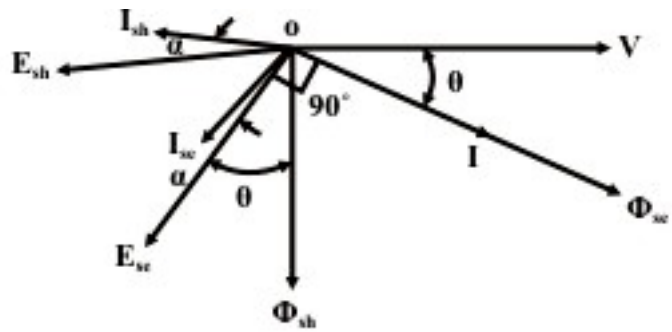

Fig. 44.3: Phasor diagram of fluxes and eddy currents in watt-hour meter.

The flux generated by the current coil is in phase with the current and flux generated by the voltage coil is adjusted to be exactly in quadrature with the applied voltage by means of the copper shading ring on the voltage or shunt magnet. Theory of shaded pole is discussed in Appendix. The average torque acting upon the disc

$$T_{d(av)} \propto \frac{k\,k'}{Z} V_{\max} I_{\max} \frac{1}{2}\left(\cos(\theta+\alpha)+\cos(\theta-\alpha)\right)$$

$$\propto \frac{k\,k'}{Z} V_{\max} I_{\max} \cos\alpha \cos\theta = \left(\frac{2\,k\,k'}{Z}\cos\alpha\right) VI\cos\theta \tag{44.3}$$

$$\propto VI\cos\theta = \text{power in the circuit}$$

One can write average torque expression directly from the phasor diagram shown in fig.44.3

$$T_{d(av)} \propto \left[\Phi_{sh(rms)} I_{se} \cos(\angle\Phi_{sh(rms)}, I_{se}) - \Phi_{se(rms)} I_{sh} \cos(\angle\Phi_{se(rms)}, I_{sh})\right]$$

$$\propto \left[\Phi_{sh(rms)} I_{se} \cos(\theta+\alpha) - \Phi_{se(rms)} I_{sh} \cos(180+\alpha-\theta)\right]$$

$$\propto \left[k'V\,k\frac{I}{Z}\cos(\theta+\alpha)+k\,I\,k'\frac{V}{Z}\cos(\theta-\alpha)\right]$$

$$\propto \left(\frac{2\,k\,k'}{Z}\cos\alpha\right) VI\cos\theta$$

$$\propto VI\cos\theta = \text{power in the circuit}$$

where $\Phi_{sh}, \Phi_{se}, I_{sh}, I_{se}, V,\ and\ I$ are all expressed as r.m.s.

Remarks : (i) The torque expression shows that for a large torque the eddy current path resistance must be low which in turn the value of $\cos\alpha$ will be nearly equal to 1. Consideration of the torque-weight ratio shows that the choice of aluminium disc will be superior to copper and further it can be

improved by properly selecting aluminium disc thickness. (ii) Note, that the torque expression does not involve ωt and it has same value at all instants of time. (iii) The resultant torque will act on the disc in such away so that it will move from the pole with the leading flux towards the pole with lagging flux.

Opposing or Brake Torque:

Now the breaking torque is produced by the eddy currents induced in the disc by its rotation in a magnetic field of constant intensity, the constant field being provided by the permanent magnet (called brake magnet, see fig. 44.1(a) & (b)). The eddy current i_b produced in the aluminium–disc by the brake magnet flux ϕ_b is proportional to the speed (N) of rotation of the disc N, as shown in fig.44.4.

Thus braking torque

$$T_b \propto \Phi_b i_b \propto \Phi_b \frac{e_b}{r}$$

, where r = eddy current path resistance

$$\propto \Phi_b \frac{N\Phi_b}{r}$$

$$\propto N\Phi_b^{\,2}$$

Since Φ_b is constant, this implies that

$$T_b \propto N \qquad (44.4)$$

where N = speed of rotation of disc.
Now when the speed becomes steady, driving and braking torques become $T_d = T_b$ (see fig.44.4).

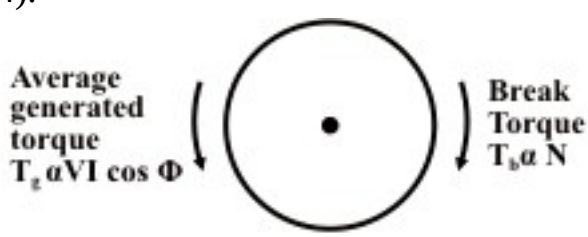

Fig. 44.4: Torque balance in a watt-hour meter.

Therefore, $V I \cos\theta \propto N$ i.e. speed of the disc is proportional to the power consumed by the load. The total number of revolution i.e. $\int N\,dt = \int V I \cos\theta\, dt \propto$ Energy consumed. This means that the speed of rotation of the disc is proportional to the average power. The integral of the number of revolutions of the disc is proportional to the total energy supplied.

The disc is connected via a gearing mechanism to a mechanical counter that can be read directly in watt-hours.

Remarks: (i) For a given disc and brake magnet, the braking torque varies with the distance of the poles from the center of the disc. The maximum braking torque occurs when the distance of the center of the pole faces from the center of the disc is equal to 83% of the radius of the disc. (ii) a movement of the poles of brake magnet towards the center of the disc reducing the braking torque (as the distance of brake magnet reduces from the center of the disc), and vise versa.

L44.3 Errors in the energy meter:

Assuming the supply voltage and frequency constant, the induction type energy may have the following errors:

i Speed error: Due to the incorrect position of the brake magnet, the braking torque is not correctly developed. This can be tested when meter runs at its full load current alternatively on loads of unity power factor and a low lagging power factor. The speed can be adjusted to the correct value by varying the position of the braking magnet towards the centre of the disc or away from the centre and the shielding loop. If the meter runs fast on inductive load and correctly on non-inductive load, the shielding loop must be moved towards the disc. On the other hand, if the meter runs slow on non-inductive load, the brake magnet must be moved towards the center of the disc.

ii Meter phase error: An error due to incorrect adjustment of the position of shading band results an incorrect phase displacement between the magnetic flux and the supply voltage (not in quadrature). This is tested with 0.5 p.f. load at the rated load condition. By adjusting the position of the copper shading band in the central limb of the shunt magnet this error can be eliminated.

iii Friction error: An additional amount of driving torque is required to compensate this error. The two shading bands on the limbs are adjusted to create this extra torque. This adjustment is done at low load (at about $1/4^{th}$ of full load at unity p.f.).

iv Creep: In some meters a slow but continuous rotation is seen when pressure coil is excited but with no load current flowing. This slow revolution records some energy. This is called the creep error. This slow motion may be due to (a) incorrect friction compensation, (b) to stray magnetic field (c) for over voltage across the voltage coil. This can be eliminated by drilling two holes or slots in the disc on opposite side of the spindle. When one of the holes comes under the poles of shunt magnet, the rotation being thus limited to a maximum of 180^0. In some cases, a small piece of iron tongue or vane is fitted to the edge of the disc. When the position of the vane is adjacent to the brake magnet, the attractive force between the iron tongue or vane and brake magnet is just sufficient to stop slow motion of the disc with full shunt excitation and under no load condition.

(v) Temperature effect: Energy meters are almost inherently free from errors due to temperature variations. Temperature affects both driving and braking torques equally (with the increase in temperature the resistance of the induced-current path in the disc is also increases) and so produces negligible error. A flux level in the brake magnet decreases with increase in temperature and introduces a small error in the meter readings. This error is frequently taken as negligible, but in modern energy meters compensation is adopted in the form of flux divider on the break magnet.

Energy meter constant K is defined as

$$K = \frac{\text{No. of revolutions}}{\text{kwh}}$$

In commercial meters the speed of the disc is of the order of 1800 revolutions per hour at full load

L.44.4 Extension of Instrument Range:

We have seen earlier M.C. instrument's range can be extended by properly designed non inductive shunts and multipliers in cases of ammeter and voltmeter respectively. Similarly for MI instruments shunts and multipliers can be designed for extension of range. Sometimes transformers are used in ac systems for the measurement of the basic quantities such as current, voltage and power. The transformers used in connection with the instruments for measurement purpose are **referred to as Instrument**

Transformers. They are classified as Current Transformer (C.T.) used for current measurement and potential Transformer (P.T.) used for voltage measurement. These transformers are used not only for extension of the range of the instrument, but also for isolating the instrument from a high current or voltage line. The advantages of these transformers are

- Single range instrument can be used to cover a wide range.
- Indicating instrument can be located at some distance from the circuit. This is a great advantage particularly for high voltage situation.
- By use of CT with split core or hinged core, the current in heavy current bus bar can be measured without breaking the circuit.

Appendix

Theory of shielded pole shunt magnet:

Fig. 44.5(a) shows that a shielding coil C (single turn) surrounds the pole face of the core of a magnet that is magnetized by the supply voltage V. The flux Φ at the pole face is taken as a reference vector in the phasor diagram as shown in fig. 44.5(b).

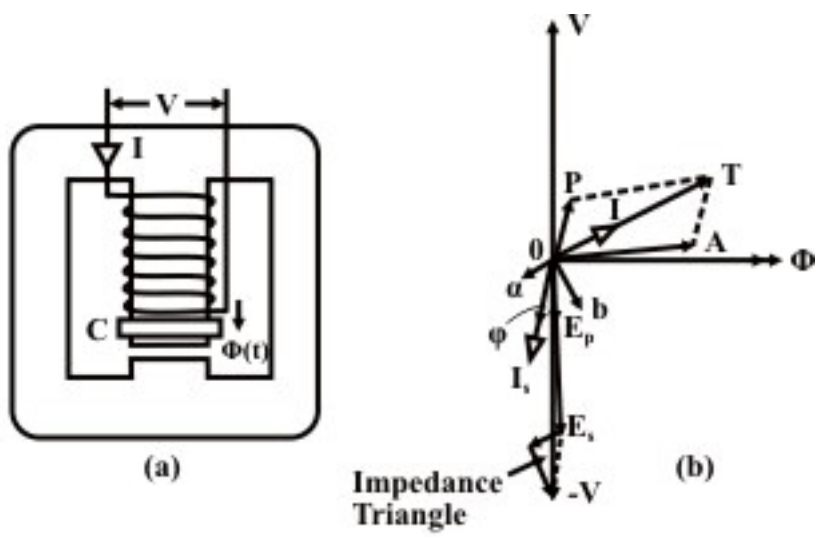

Fig. 44.5: Pasor diagram for shielded-pole shunt magnet.

No load magnetizing current I_0 and ampere turns $N I_0$ for the magnetic circuit are in same phase. The phasor OA = $N I_0$ represents magnetizing ampere-turns slightly in advance of the flux Φ owing to core loss in the magnetic circuit. The e.m.fs induced in exciting and shielding coils are represented by

OE_p and OE_s respetively and they are lagging by 90^0 with respect to the flux Φ. The current in shielding coil and also ampere-turns due to this coil are represented by the phasor OI_s. Hence, the effective ampere-turns to be provided by the exciting coil are represented by OT which is equal to the phasor sum of ampere-turms OA & OP. The phasor OP represents balancing ampere-turns due to the shielding coil C. The resultant exciting current is represented by OI. The applied voltage to the exciting coil is then can be found out by adding the induced e.m.f OE_p to the resistance and reactance voltage drops of the exciting coil. Now, in the induction energy meter, the applied voltage OV must lead the flux phasor Φ by 90^0. An inspection of phasor diagram shows that by adjusting the ampere-turns of the shielding coil one can obtain 90^0 phase difference between applied voltage OV and flux Φ. The ampere-turns of the shielding coil being effected either by alternation of the resistance of the shielding coil or by altering its axial position.

L44.5 Test your Understanding

Marks: 50

T.1 Describe fully the construction and principles operation of a single phase, induction type watt-hour meter, and explain the adjustments usually provided. [10]

T.2 State all possible source of errors that are involve in watt-hour meter and show how these are minimized in practice. [10]

T.3 Explain how one can prevent from registering the meter reading when shunt magnet is energized with the supply voltage and the load current flowing through series magnet is zero. [5]

T.4 A single phase $230V$ watt-hour meter has correctly adjusted having a meter constant of $500\ rev/kWh$. Determine the speed of the disc for current of $20A$ at a power factor lagging of 0.5. [5]
($Ans.\ 19.2\ r.p.m$)

T.5 The number of revolution per kWh for a $230V, 20A$ watt-hour meter is 1000. On test at half load, the time for 40 revolution of the disc is found to be 62 seconds. Determine the meter error at half load. [8]

$(Ans.\ 0.97\%,\ fast)$

T.6 A single-phase induction watt-hour meter has its full-load ratings $240V, 10A$. Assuming the friction is accurately compensated at all power factors. If the phase angle between shunt magnet flux and applied voltage is 82^0 instead of 90^0, estimate the error introduced (i) at unity p.f (ii) at 0.8 lagging p.f. (iii) at 0.8 leading p.f . Prove any formula used. [4+4+4]
$(Ans.(i)\ 0.97\%\ \ (ii)\ 11.39\%, (slow)\ \ (iii) - 9.46\%\ (fast))$